This is a digital copy of a book that was preserved for generations on library shelves before it was carefully scanned by Google as part of a project to make the world's books discoverable online.

It has survived long enough for the copyright to expire and the book to enter the public domain. A public domain book is one that was never subject to copyright or whose legal copyright term has expired. Whether a book is in the public domain may vary country to country. Public domain books are our gateways to the past, representing a wealth of history, culture and knowledge that's often difficult to discover.

Marks, notations and other marginalia present in the original volume will appear in this file - a reminder of this book's long journey from the publisher to a library and finally to you.

Usage guidelines

Google is proud to partner with libraries to digitize public domain materials and make them widely accessible. Public domain books belong to the public and we are merely their custodians. Nevertheless, this work is expensive, so in order to keep providing this resource, we have taken steps to prevent abuse by commercial parties, including placing technical restrictions on automated querying.

We also ask that you:

+ *Make non-commercial use of the files* We designed Google Book Search for use by individuals, and we request that you use these files for personal, non-commercial purposes.
+ *Refrain from automated querying* Do not send automated queries of any sort to Google's system: If you are conducting research on machine translation, optical character recognition or other areas where access to a large amount of text is helpful, please contact us. We encourage the use of public domain materials for these purposes and may be able to help.
+ *Maintain attribution* The Google "watermark" you see on each file is essential for informing people about this project and helping them find additional materials through Google Book Search. Please do not remove it.
+ *Keep it legal* Whatever your use, remember that you are responsible for ensuring that what you are doing is legal. Do not assume that just because we believe a book is in the public domain for users in the United States, that the work is also in the public domain for users in other countries. Whether a book is still in copyright varies from country to country, and we can't offer guidance on whether any specific use of any specific book is allowed. Please do not assume that a book's appearance in Google Book Search means it can be used in any manner anywhere in the world. Copyright infringement liability can be quite severe.

About Google Book Search

Google's mission is to organize the world's information and to make it universally accessible and useful. Google Book Search helps readers discover the world's books while helping authors and publishers reach new audiences. You can search through the full text of this book on the web at `http://books.google.com/`

THE UNIVERSITY OF MICHIGAN · LIBRARIES · 1817

THE UNIVERSITY OF MICHIGAN · LIBRARIES · 1817

THE UNIVERSITY OF MICHIGAN · LIBRARIES · 1817

THE UNIVERSITY OF MICHIGAN · LIBRARIES · 1817

Engin.
TJ
1
.A6
T8
v.10

COPYRIGHT, 1889,
BY THE AMERICAN SOCIETY OF MECHANICAL ENGINEERS.

Press of J. J. Little & Co.,
Astor Place, New York.

OFFICERS

OF THE

AMERICAN SOCIETY OF MECHANICAL ENGINEERS.

1888—1889.

PRESIDENT.

HENRY R. TOWNE.....Stamford, Conn.

VICE-PRESIDENTS.

W. S. G. BAKER.....Baltimore, Md.
HENRY G. MORRIS.....Philadelphia, Pa.
C. J. H. WOODBURY.....Boston, Mass.
Term expires at Annual Meeting of 1889.

THOMAS J. BORDEN.....Fall River, Mass.
WM. KENT.....New York City.
CHARLES B. RICHARDS.....New Haven, Conn.
Term expires at Annual Meeting of 1890.

MANAGERS.

FRED'K G. COGGIN.....Lake Linden, Mich.
JOHN T. HAWKINS.....Taunton, Mass.
THOMAS R. MORGAN, SR.....Alliance, O.
Term expires at Annual Meeting of 1889.

STEPHEN W. BALDWIN.....New York City.
FREDERICK GRINNELL.....Providence, R. I.
MORRIS SELLERS.....Chicago, Ill.
Terms expires at Annual Meeting of 1890.

FRANK H. BALL.....Erie, Pa.
GEO. M. BOND.....Hartford, Conn.
WM. FORSYTH.....Aurora, Ill.
Term expires at Annual Meeting of 1891.

TREASURER.

WM. H. WILEY.....New York City.

SECRETARY.

F. R. HUTTON.....280 Broadway, and 50th St. and 4th Ave., New York City.

LIST OF MEMBERS.

Honorary Members in Perpetuity.

DECEASED FOUNDERS OF THE SOCIETY.

HENRY ROSSITER WORTHINGTON,
ALEXANDER LYMAN HOLLEY.

Honorary Members.

ALLEN, HORATIO.....Homewood, South Orange, N. J.
BAKER, BENJAMIN..Forth Bridge Ry., 2 Queen Sq. Pl., Westminster, S.W., London, England.
BRAMWELL, SIR FREDERICK, D. C. L., F. R. S., M. I. C. E..5 Great George St., Westminster, London, England.
BAUSCHINGER, JOHANN.....Schellingstrasse 34, Munich, Germany.
CLARK, DANIEL KINNEAR, M. I. C. E.....8 Buckingham St., Adelphi, London, England.
DREDGE, JAMES.....*Engineering*, 35 and 36 Bedford Street, Strand, London, England.
DWELSHAUVERS-DERY, V..Prof. at University, 5 Quai Marcellis, Liege, Belgium.
GRASHOF, F.....Carlsruhe, Germany.
HERRMANN, GUSTAV.....Aix-la-Chapelle, Germany.
HIRN, G. A.....Boulevard Du Haut Landsberg, Colmar, Alsace.
REED, SIR EDWARD J., K. C. B., M. P....Broadway Chambers, Westminster, S. W., London, England.
REULEAUX, FRANCIS.....Potsdammerstrasse, 20a, Berlin, Germany.
SCHNEIDER, HENRI.....Le Creusôt, France.
WALKER, FRANCIS A.....President, Massachusetts Institute of Technology, Boston, Mass.

Life Members.

BURGDORFF, THEO. F.....University of Tennessee, Knoxville, Tenn.
DU BOIS, A. JAY.....Yale College, New Haven, Conn.
EDISON, THOMAS A.....Orange, N. J.
HUNT, CHARLES WALLACE.....45 Broadway, New York City.
NORMAN, GEORGE H.....343 Beacon Street, Boston, Mass.
ROWLAND, THOMAS F.....President Continental Iron Works, Station "G," Brooklyn, N. Y.
SIMS, GARDINER C., Gen. Mgr. Armington and Sims Eng. Co., Providence, R. I.
SORZANO, JULIO FEDERICO.....Cons. Civ. Eng., 33 Broadway. Box 2675, N. Y. City.

Members.

AITKEN, ROBERT W....Pitts Ag'l and Eng. Works, and 434 Seventh St., Buffalo, N. Y.
ALBRECHT, OTTO..... D'tsman, Bement, Miles & Co., 21st and Callowhill Sts. Philadelphia, Pa.
ALDEN, GEORGE I.....Prof. Mech. Polyt. Institute, Worcester, Mass.
ALLDERDICE, WILLIAM HILLARY, Asst. Eng., U. S. N.....Rio de Janeiro, care B. F. Stevens, 4 Trafalgar Square, London, Eng.
ALLEN, FRANCIS B.....Second V.-P., Hartford Steam Boiler Insp. and Ins. Co., Hartford, Conn.
ALLEN, JEREMIAH M....President Hartford Steam Boiler Ins. and Insp. Co., Hartford, Conn.
ALLEN, JOHN F.....629 Walton Ave., New York City.
ALLISON, ROBERT.....Franklin Iron Works, Port Carbon, Pa.
ALMOND, THOMAS R.....83 Washington Street, Brooklyn, N. Y.
AMES, WILLIAM LEWIS. Prof. Mech. D'w'g, Rose Polyt. Inst., Terre Haute, Ind.
ANGSTROM, CARL.....Mech. Eng'r Iron and Steel Works, Domnarfvet, Sweden.
ANTHONY, GARDNER C.....Director R. I. Technical D'w'g School, 297 Westminster St., and 48 Courtland St., Providence, R. I.
ARMINGTON, PARDON....Treas. Armington and Sims Eng. Co., Providence, R. I.
ASHBURNER, CHARLES A., Mining Engr. and Geologist, Westinghouse Building, and 363 So. Highland Ave., Pittsburgh, Pa.
ASHWORTH, DANIEL.....Mech. and Cons. Eng., Sheriff & Ashworth, 80 Water St., Pittsburgh, Pa.
ATKINS, JAMES.....Montclair, N. J.
AUCHINCLOSS, WILLIAM S .....209 Church Street, Philadelphia, Pa.

BABBITT, GEORGE RODNEY. Supt. W. A. Harris St'm Eng. Co., Providence, R. I.
BABCOCK, GEORGE H...Pres't The Babcock & Wilcox Co., 30 Cortlandt Street, New York City, and Plainfield, N. J.
BABCOCK, STEPHEN E.....Chief. Eng., W. W., Little Falls, N. Y.
BACKSTROM, GUSTAF LEONARD, Mech. Eng'r, 1600 Hamilton St., Philadelphia, Pa.
BACON, EARLE C....Copeland & Bacon, Mech. Eng., 85 Liberty Street, New York City.
BAILEY, READE W....Mgr., The Robinson Rea Mfg. Co., 53 Carson St., Pittsburgh, Pa.
BAKER, W. S. G.....Pres't Balto. Car Wheel Co., Baltimore, Md.
BALDWIN, OSCAR H., Westinghouse Elect. Co., Pittsburgh, Pa.
BALDWIN, STEPHEN W.....Penn. Steel Co., 2 Wall St., New York City. and 137 Buena Vista Ave., Yonkers, N. Y.
BALDWIN, WILLIAM J.....M. E. Heating & Ventilating Co., 227 Pearl St., New York City.
BALL, FRANK H.....Treas. and Gen. Mgr., Ball Engine Co., Erie, Pa.
BALSINGER, C.....M. M. Union Steel Co., 3179 Ashland Ave., Chicago, Ill.
BANCROFT, J. SELLERS...Mgr. Wm. Sellers & Co., Icptd., 1600 Hamilton St. and 3310 Arch St., Philadelphia, Pa.
BARNABY, CHAS. W., Jenney Electric Co., 196 No. Delaware St., Indianapolis, Ind.
BARNARD, GEORGE A.....Steam Power Plants and Steam Htg. Apparatus, 15 Cortlandt St., Room 62, N. Y. City, and 87 Halstead St., E. Orange, N. J.
BARNES, ABEL T., Consult'g Eng'r (for B. F. Sturtevant), Jamaica Plains, Mass.

BARNES, DAVID LEONARD....Cons. Eng., The Rookery, Chicago, and 115 Broadway, N. Y. City.
BARNES, PHINEHAS.....P. O. Box 1021, and Jones & Laughlins, Pittsburgh, Pa.
BARNES, W. F.. ....Prest., W. F. & J. Barnes Co., Rockford, Ill.
BARNHURST, H. R....Mech. Supt., Man. and Treas. Stearns Mfg. Co., Erie, Pa.
BARNUM, GEORGE S. ....Treas. "The Bigelow Co.," New Haven, Conn.
BARR, J. N., Supt. Mo. P. C. M. & St. P. R. R., West Milwaukee, Wis., and 3028 Willis St.
BARR, JOHN H.....Inst'r in Mech. Eng'g, Univ. of Minneapolis, Minn.
BARR, WILLIAM M.....V. P. Barr Pumping Eng. Co., Germantown Junction, Philadelphia, Pa.
BARRATT, EDGAR GRANT..... ....Prest., Leeds-Barratt Supply Co., 307 Hennepin Ave., Minneapolis, Minn.
BARRUS, GEORGE H..Expert and Cons Steam Eng., Room 45, Mut. Life Ins. Co. Building, 95 Milk St., Boston, Mass.
BARTLETT, GEORGE B....Mech. D'tsman Union Steel Co., 3179 Ashland Ave., Chicago, Ill.
BARTOL, GEO.....Otis Iron and Steel Co., Cleveland, Ohio.
BASSETT, NORMAN C.....Mech. Eng. Hale Elev. Co., Room 81, 187 La Salle St., Chicago, Ill.
BATCHELOR, CHARLES.....Orange, N. J., and 33 West 25th, St., New York City.
BAUER, CHARLES A.... Gen. Mgr. The Warder, Bushnell & Glessner Co., Springfield, Ohio.
BAUGH, SAMUEL ANDREW.....Supt. Baugh Steam Forge Co., Detroit, Mich.
BAYLES, JAMES C .....Spiral Weld Tube Co., 5-7 Beekman St., New York City.
BEARDSLEY, ARTHUR....Prof. Civil and Mech. Eng., Swarthmore College, Swarthmore, Del. Co., Pa.
BECK, MATT A.....710 So. Webster St., East Saginaw, Mich.
BEEKMAN, JOHN V..Supt. Lidgerwood Mfg. Co., 383 Union St., Brooklyn, N. Y.
BEGGS, JAMES.....9 Dey Street, New York City.
BELCHER, AMHERST W...Supt. Repair Shops Cornell St'b't Co., Rondout, N. Y.
BELLHOUSE, R. WYNYARD....Warner's Portland Cement Mfg. Co., 52 Crouse Bldg., Syracuse, N. Y.
BELLINGRODT, M. O.....Asst. Eng. Milwaukee Gas Light Co., Box 211, Milwaukee, Wis.
BENJAMIN, PARK.....Mech. and Elect. Eng'r, 32 Park Place, New York City.
BENNETT, EDWIN H..... .....Bayonne, N. J.
BENNETT, FRANK M., Asst. Eng. U. S. N.....U. S. S. "Enterprise," and Care B. F. Stevens, 4 Trafalgar Square, London, England.
BETTS, ALFRED .....Prest. Betts Machine Co., Wilmington, Del.
BETTS, WILLIAM.....Betts Machine Co., Wilmington, Del.
BIGELOW, FRANK L.....Secretary "The Bigelow Co.," New Haven, Conn.
BIGELOW, GEORGE W.....New Haven, Conn.
BILGRAM, HUGO.....438 No. 12th St., Philadelphia, Pa.
BILLINGS, CHARLES E .....Prest., Billings & Spencer Co., Hartford, Conn.
BINSSE, HENRY LEON.....Eng. and Prop. of the Newark Mach. Tool Works, Newark, N. J.
BIRKINBINE, JOHN...Civ. and Min'g Eng'r, 25 N. Juniper St., Philadelphia, Pa.
BIXBY, WILLIAM H., U. S. A.....Capt. Engrs., Wilmington, N. C.
BLAKE, FRANCIS C.....Supt. Penn. Lead Co., 61 Fourth Ave., Pittsburgh, Pa. P. O. Box 1602.

BLAKE, PERCY M., C. E. ..... Hyde Park, Mass.
BLELOCH, GEO. H. ..... Springfield, Mass.
BOLE, WILLIAM ANDREW ..... Supt. Westinghouse Mach. Co.'s Works, Cor. 25th and Liberty Sts., Pittsburgh, Pa.
BOND, GEORGE M. ..... M'n'g'r Gauge Dept., Pratt & Whitney Co., and 141 Washington St., Hartford, Conn.
BONE, WILLIAM H. ..... Mech. D'isman, Walker Mfg. Co., and 227 Twenty-third Av., Cleveland, Ohio.
BOORAEM, J. VAN VORST .... Engineer-in-Chief, Havemeyer & Elder, etc., Sugar Refineries, and 204 Lincoln Place, Brooklyn, N. Y.
BOOTH, THOMAS C ..... T. C. Booth, 14 Howard St., New York City.
BORDEN, THOMAS J. ..... Pres. Richard Borden Mfg. Co., Fall River, Mass.
BOYD, JAS. T. ..... Constr. Engineer Atlantic Works, and 166 Falmouth St., East Boston, Mass.
BOYD, JOHN T. ..... M'n'g'r Yale and Towne Mfg. Co., 15 No. 6th St., and 423 So. 15th St., Philadelphia, Pa.
BRAY, CHARLES W. ..... Sec'y, The Lloyd Booth Co., and 820 E. Federal St., Youngstown, Ohio.
BRADY, JAMES ..... Man. & Treas., Brady Mfg. Co., York & Washington Sts., and 162 Leffert's Place, Brooklyn, N. Y.
BRIGGS, CHAS C. ..... Jones & Laughlins, Pittsburgh, Pa.
BROADBENT, CHARLES L. ..... Eng'r and Des. for Knowles Pump Works, 93 Liberty St., New York City.
BROADBENT, SIDNEY ..... Supt. Dickson Mfg. Co., Scranton, Pa.
BROOKS, EDWIN C. ... Engineer Cambridge W. W. Pumping Station, Cambridge, Mass.
BROOKS, MORGAN ..... The St. Paul Gas Light Co., St. Paul, Minn.
BROOKS, WM. B., Chief Eng'r U. S. N ... West Point F'dry, Cold Spring, N. Y.
BROWN, A. G. ..... Globe Iron Works, Bolton, Lancashire, England.
BROWN, ALEXANDER E. . V. P. & Man. The Brown Hoisting and Conveying Mach. Co., cor. Belden and Hamilton Sts., and 1151 Prospect St., Cleveland, O.
BROWN, C. H. ..... C. H. Brown & Co., Fitchburg, Mass.
BRUECK, HENRY T. ..... Asst. Gen'l M'g'r Springer Torsion Bal. Co., 147 Eighth St., Jersey City, N. J.
BRUSH, CHARLES F. ..... Electrical Engineer, 71 Ontario Street, Cleveland, Ohio.
BULKLEY, HENRY W. ..... Mech. Eng'r, *Times* Building, Park Row, New York City, and E. Orange, N. J.
BULLOCK, MILAN C. ... President M. C. Bullock Mfg. Co., Rooms 509-510 Phœnix Bldg., cor. Clark and Jackson Sts., Chicago, Ill.
BURDEN, JAMES A. ..... Pres., Burden Iron Co., Troy, N. Y.
BURR, JOHN T. ..... 179 Washington Park, Brooklyn, N. Y.
BUTTERWORTH, JAMES ..... York and Cedar Streets, Philadelphia, Pa.
BYLLESBY, H. M. ..... Westinghouse Elec. Co., Box 1000, Pittsburgh, Pa.

CADWELL, WM. D ..... Nashua, N. H.
CAIRD, ROBERT ..... 5 Newark St., Greenock, Scotland.
CAMPBELL, A. HAMILTON .... Curator, St. Paul's School, P. O. Box 670, Concord, N. H.
CAMPBELL, GEO. W. ..... Chief Eng'r U. S. Ill. Co., 59 Liberty Street, New York City.
CAPEN, THOMAS W. .... Fraser & Chalmers, Fulton and Union Sts., Chicago, Ill.

CARPENTER, R. C..... Prof. of Engineering, State Agric. Coll., Ingham Co. (Lansing), Mich.
CARR, C. A., Ass't Eng'r U. S. N., S. S. "Omaha," care U. S. Consul, Yokohama, Japan, also 78 Magnolia Ave., Jersey City, N. J.
CARROLL, LAFAYETTE D.....Mech. Eng. Sloss Iron & Steel Co., Box 63, Birmingham, Ala.
CARTWRIGHT, ROBERT.....1 Hawthorne St., Rochester, N. Y.
CARY, ALBERT A., M. M., Mech. Eng. Cary & Moen Co., 234 W. 29th St., N. Y. City.
CAVANAGH, JOSEPH .....Eng., The Link Belt Eng'g Co., Nicetown, Philadelphia, Pa.
CHAMBERLIN, F. L....Sec'y The Variety Iron Works Co., 51-73 Scranton Ave., Cleveland, O.
CHAPMAN, LUKE.....M. M. The Collins Co., Box 34 Collinsville, Conn.
CHARNOCK, JOHN MILTON.. ...Cons. and Htg. Engr., 16 Dey St., New York City.
CHENEY, WALTER L..... ...55 Huyshope Av., Hartford Conn.
CHRISTENSEN, AUGUST C.....Mech. & Hyd. Eng., 24 State St., New York City.
CHRISTIE, JAMES ..... .Pencoyd Iron Works, Pencoyd, Pa.
CHRISTIE, W. WALLACE...Asst. Eng'r, Ramapo, I. W., Hillburn, N. Y., and 203 Sumner St., Paterson, N. J.
CHURCH, WM. LEE...Westinghouse, Church, Kerr & Co., 620 Atlantic Ave., Boston, and Newton Centre, Mass.
CHURCHILL, THOMAS L..... Insurance Inspector, 71 Kilby St., Room 35, Boston, and 17 Fifth St., Chelsea, Mass.
CLARK, WALTER L.....N. Y. Mgr. Niles Tool Works, 96 Liberty St., New York City.
CLARKE, ALFRED.....Genl. Supt. Atherton Mach. Co., Lowell, Mass.
CLARKE, CHARLES L.... .....40 Walnut St., East Orange, N. J.
CLARKE, DAVID.....M. M., L. V. R. R., Hazelton, Pa.
CLARKE, SAMUEL J.....Supt. Eng'r. Prov. and Stonington S. S. Co., New Pier 36, N. R., New York City.
CLAY, JOHN RIDGWAY....Hydr. Eng. and D'tsman, Smith & Vaile Co., Room 6, 2 East Third St., Dayton, O.
CLEMENTS, WM. L.....Industrial Works, Bay City, Mich.
CLOUD, JOHN W...Mech. Eng., 31 White Building, 996 Main St., Buffalo, N. Y.
COBB, EDWARD S .....Supt. Shops & Instr. Mach. Design, Rose Polytechnic Inst., Terre Haute, Ind.
COES, Z. B.....Niles Tool Works, Hamilton, O.
COFFIN, JOHN.....Cambria I. W., Johnstown, Pa.
COGGIN, FREDERIC G....Supt. Calumet & Hecla Stamp Mills, Lake Linden, L. S., Mich.
COGSWELL, WM. B....Gen. Man. Solvay Process Co., 25 White Building, Syracuse, N. Y.
COLE, FRANCIS J....Chief D'tsman Mech. Dept. B. &. O. R. R., Mont Clare, Baltimore, Md.
COLE, J. WENDELL ....Detroit Emery Wheel Co., P. O. Box 84, Columbus, Ohio.
COLEMAN, ISAIAH B.....Foundry and Mach. Shop, State and Church Sts., Elmira, N. Y.
COLEMAN, WM. H....I. & M. Wolff and Coleman, 261 Dearborn St., Chicago, Ill.
COLLIER, R. B ...Supt. Columbus Mach. Co., 139 W. Broad St., Columbus, Ohio.
COLLINS, CHAS. M.....Supt. Studebaker Bros., and 117 E. Tutt St., South Bend, Ind.

COLLINS, C. C.....10 Rowland St., Newark, N. J.
COLWELL, AUGUSTUS W..74 Cortlandt St., and 365 W. 27th St., New York City.
COMLY, GEORGE N.....Edgemoor Iron Works, Edgemoor, Del.
COOK, A. S .....Manuf. of Machinery, Colt's West Armory, Hartford, Conn.
COOK, FREDERIC.....Consulting & Mech. Eng., 57 Carondelet St., Box 2524, New Orleans, La.
COOLEY, M. E.....Prof. Mech. Eng. University of Michigan, Ann Arbor, Mich.
COON, J. S.....Prof. Eng'g. Univ. Tenn., Knoxville, Tenn.
COOPER, JOHN H.....Mech. Eng., Southwark Foundry and Mach. Co., 430 Washington Ave., and 135 Wister St., Gmtn., Phila., Pa.
COPELAND, CHARLES W.....24 Park Place, New York City.
COPELAND, GEORGE M..24 Park Place, New York City, and 13 W. Mulberry St., Baltimore, Md.
CORBETT, CHAS. H .....Continental Iron Works, and 428 Lafayette Ave., Brooklyn, N. Y.
CORLISS, WILLIAM .....Pres. Corliss Safe Mfg. Co., Providence, R. I.
CORNELIUS, HENRY R .....Mech. Eng., Southwark F. & M. Co., 430 Washington Ave., Philadelphia, Pa.
COTTER, JOHN .....Mt. Holly, N. J.
COTTRELL, CALVERT B. ...Printing Presses, etc., 8 Spruce St., New York City.
COWLES, WILLIAM.....Const. Eng. & Naval Arch't, 45 Broadway, New York City, and Mansion House, Brooklyn.
COX, J. D., JR.....Cleveland Twist Drill Co., cor. Locke and Kirtland Sts., Cleveland, Ohio,
COXE, ECKLEY B.....Drifton, Luzerne Co., Pa.
CRAMP, ANDREW D .....Naval Architect, Wm. Cramp & Sons, Beach and Norris Sts., Philadelphia, Pa.
CRAMP, EDWIN S....Mech. Eng. Wm. Cramp and Sons, Beach and Norris Sts., Philadelphia, Pa.
CRANE, THOS. S.....Mech'l and Patent Expt., 800 Broad Street, Room 102, Newark, N. J.
CRANE, WILLIAM EDWARD....Chief Eng. Benedict & Burnham M'f'g Co., 37 Baldwin Hill, Waterbury, Conn.
CREELMAN, WM. J .....Engineer Woodbury Engine Co., Rochester, N. Y.
CREMER, JAMES M....H. R. Worthington Hydraulic Works, So. Brooklyn, N.Y.
CROSBY, GEORGE H.....Crosby Steam Gauge and Valve Co., Elm Farm, Albion, Me., and 95 Oliver Street, Boston, Mass.
CROUTHERS, JAMES A....Coal and Iron Exchange, Room 6, Cortlandt and Church Sts., New York City.
CROWELL, LUTHER C.....R. Hoe & Co., 504 Grand St., N. Y. City.
CULLEN, JAMES K.....96 Lake Street, Chicago, Ill.
CULLINGWORTH, GEO. R.....49 West 93d St., New York City.
CUMMER, F. D.....Cummer Engine Co., 23 Hawthorne Ave., Cleveland, Ohio.
CUMMINGS, A. G.....M'g'r Excelsior Elect. Co., Walnut St. and P. R. R., Harrisburg, Pa.
CURTIS, GRAM .....With J. P. Witherow, Lewis Block, 6th Ave. and Smithfield St., Pittsburgh, Pa.
CUSHING, G. W..... ...Supt., M. P. N. P. Ry., Omaha, Neb.

DAGRON, JAMES G.....415 Broadway, Room 30, New York City
DALLETT, W. P.....Wm. Sellers & Co., and 3206 Sumner St., Phila Pa.

DANFORTH, ALBERT W...Engineer & Supt. Shanghai Cotton Cloth Mills Co., Shanghai, China, also 245 Bridge St., Lowell, Mass.
DANIELS, FRED. H....Washburn & Moen Mfg. Co., and 130 Lincoln Street, Worcester, Mass.
DARLEY, E. C.....Care Oregon I. & S. Co., Oswego, Ore.
DAVIDSON, MARSHALL T...Pumping Mach'y, 77 Liberty St., New York City, and 108 St. James Place, B'klyn, N. Y.
DAVIES, R. H.....M. M., Phœnix Iron Works, Phœnixville, Pa.
DAVIS, DAVID P.....Eng'r N. Y. Safety Steam Power Co., 30 Cortlandt Street, New York City.
DAVIS, D. W.....Supt. Buckeye Eng. Co., 258 Lincoln Ave., Salem, O.
DAVIS, E. F. C.....Supt. Shops Phila. & Reading Coal and Iron Co., Pottsville, Pa.
DAVIS, ISAAC H.....Westinghouse, Church, Kerr & Co., Dorchester, Mass.
DAVIS, JOSEPH P.....Cons. Eng., Met. Tel. & Tel. Co., 18 Cortlandt Street, New York City.
DAVISON, HENRY J.....Gas Works Engineer, 2 Wall Street, New York City.
DEAN, FRANCIS W....Chf. D'ftsman, E. D. Leavitt, Jr., 2 Central Square, Cambridgeport, Mass.
DEANE, CHARLES P.....Treas. Deane Steam Pump Works, Holyoke, Mass.
DE AROZARENA, RAFAEL M..J. Arce y Cia, Primera Calle de San Francisco, No. 1, City of Mexico, Mex.
DEBES, J. C.....M. E. and Supt. C. & G. Cooper & Co., Mt. Vernon, Ohio.
DE KINDER, J. J.....Consulting Engineer, 901 Walnut St., Phila., Pa.
DE LAVAL GEORGE.....Chief D'ftsman Knowles Steam Pump Works, Warren, Mass.
DENT, EDWARD LINTHICUM.....Mech. and St'm Ht'g Eng'r. 1413 G St., N. W. and The Washington Archt'l Iron and Bridge Wks., Water and 33d St., Washington, D. C.
DENTON, JAMES E.....Prof. Pract. Mech. Stevens Inst. Tech., Hoboken, N. J.
DE SAULLES, A. B.....Supt. Lehigh Zinc and Iron Co., Franklin Furnace, Pa.
DE SCHWEINITZ, P. B.....Steel Works, Colorado Coal and Iron Co., South Pueblo, Col.
DE VALIN, CHARLES E....Chf. Eng'r U. S. N., Chf. Engr's Office, Navy Yard, and 1308 New Hampshire Ave., Washington, D. C.
DICKY, ELMER C.....Constr. Eng., 68–70 W. Monroe St., Chicago, Ill.
DICKEY, WM. D.....Supt Albany Street Iron Works, 126 Washington Street, New York City.
DINGEE, W. W.....J. I. Case, T. M. Co., and 1124 Main St., Racine, Wis.
DIXON, CHAS. A.....Supt. Newburgh Steam Eng. Works, Newburgh, N. Y,
DIXON, GEORGE EDWARD...Man. National Htg. and Vent. Co., 200 Washington St., Chicago, Ill.
DIXON, ROBERT M.....Eng. Safety Car Htg. and Lighting Co., 160 Broadway. New York City, and 21 Walnut St., East Orange, N. J.
DOANE, WM. H.....Pres't J. A. Fay & Co., 267–285 Front St., Cincinnati, Ohio.
DOBSON, W. J. M.....Mech. Eng., 96 Albany Ave., Brooklyn, N. Y.
DOCK, HERMAN.....Director S. J. C. Co, 21 N. Front St, and 904 N. Broad St., Philadelphia, Pa.
DODDS, ELIHU.....D'tsman, 164 Broadway, Indianapolis, Ind.,
DODGE, JAMES M.....Chief Eng'r Link Belt Eng'g Co., Nicetown, and 2027 Arch Street, Philadelphia, Pa.

DONOVAN, WM. F.....Manager Yale & Towne Mfg. Co., 152 & 154 Wabash Ave., Chicago, Ill.
DORAN, WILLIAM S.....Eng'r in charge marine bus., H. R. Worthinton, 145 Broadway, New York City.
DOUGLASS, WM. M.....Gen. Supt., Iowa Barb Wire Co., Allentown, Pa.
DOWNE, HENRY S.....Sec'y. National Hot Water Heater Co., 191 Ft. Hill Sq., Boston, and Fitchburg, Mass.
DRAPER, T. W. MORGAN.....Consulting Eng'r, 145 Broadway, New York City.
DREWETT, WM. A.....Supt. Davidson Stm. Pump Co., 41-51 Keap St., Brooklyn, N. Y., and 400 West 28th St., N. Y. City.
DROWN, FREDERICK EUGENE....Architect, Mech. and Cotton Mill Eng'r, 22 Spring St., Pawtaucket. R. I.
DRUMMOND, D. D....Supt. Scoville I. W., 250-254 So. Clinton St., Chicago, Ill.
DRUMMOND, W. W.....Pres. Drummond Mfg. Co., Louisville, Ky.
DUDLEY, CHARLES B.....Chemist, Penn. R. R. Co., and 1219 Twelfth Ave., Altoona, Pa.
DUNCAN, JOHN....Asst. Supt. Calumet & Hecla Mine, Calumet, Houghton Co., Mich.
DURAND, WM. F.....Prof. Mech. Eng., Michigan Agricul. Col., (Lansing), Ingham Co., Mich.
DURFEE, W. F.....General Manager, Penn. Diamond Drill Co., Birdsboro, Berks Co., Pa.
DUTTON, C. SEYMOUR....Gen. Agent and Consulting Eng. Hamilton Works, Wm. Tod & Co., Youngstown, Ohio.
DU VILLARD, HENRY A.....Treas., Granger Foundry & Mach. Co., Gaspee and Francis Sts., Prov., R. I.

EASBY, FRANCIS H.....Mech. Eng'r Betts Machine Co., Wilmington, Del.
EASTWICK, GEORGE S.....Louisiana Sugar Refining Co., New Orleans, La.
ECKART, W. R.....P. O. Box 1844, and 217 Sansom St., San Francisco, Cal.
EDSON, JARVIS B....Prop'r & Mfg'r Pressure Record'g Gauges and Exact Apparatus, 86 Liberty St., New York, and 812 Union Street, Brooklyn, N. Y.
EGLESTON, THOMAS..Prof. Metallurgy, School of Mines, Columbia College, and 35 Washington Square, West, New York City.
ELMES, CHAS. F..Eng., Founder & Mach't, Fulton & Jefferson Sts., Chicago, Ill.
ELY, THEO. N.....Gen. Supt. Motive Power, Penn. R. R., Altoona, Pa.
EMERY, ALBERT H.....Civil Eng., Stamford, Conn.
EMERY, CHARLES E.....Consulting Eng'r, 22 Cortlandt Street, New York City.
ENGEL, LOUIS G..Brooklyn Sug. Ref. Co., and 238 Clermont Av., Brooklyn, N. Y.
EWART, WILLIAM D....Consult. Eng. Ewart Mfg. Co., 11 So. Jefferson St., Chicago, Ill., and Pres. Link Belt Eng'g Co., Nicetown, Phila., Pa.
EWEN, JOHN MEIGGS.....Architectural Engineer, Burnham & Root, Room 1142, The Rookery, Chicago, Ill.
EWER, ROLAND G.....Supt. Penn. Salt Mfg. Co., Natrona, Pa.

FABER DU FAUR, A....Room 55 Vanderbilt Bldg., 132 Nassau St., New York City.
FAIRBAIRN, W. U... Chief Inspector Hartford S. B. Insp. and Ins. Co., Hyde Park, Mass.
FALKENAU, ARTHUR.....Mech. Eng. and Macht, 11th St. & Ridge Ave. and 3214 Spencer Terrace, Phila., Pa.
FARMER, MOSES G.....Electrical Engineer, Eliot, Me.

FAWCETT, EZRA.....Alliance Industrial Works, Alliance, Ohio.
FAY, RIMMON C.....Supt. Remington Arms Co., Ilion, N. Y.
FELTON, EDGAR CONWAY.....Asst. Supt., Penn. Steel Co., Steelton, Pa.
FICKINGER, P. J.....Chf. Eng. Carnegie, Phipps & Co., Beaver Falls, Pa.
FIELD, CORNELIUS J...Gen'l M'g'r and Ch'f Eng'r Edison E. Ill. Co., Brooklyn, 56 Garfield Building, Brooklyn, N. Y.
FINGAL, CHAS. A.....Supt. A. Sandstrom & Co., cor. Root and La Salle Sts., Chicago, Ill.
FIRMSTONE, FRANK..... ....Easton, Pa.
FISHER, CHAS. H.....Patents, 25 Central Block, Lowell, Mass.
FITCH, CHARLES HOWARD.....58 Olive St, New Haven, Conn.
FITT, JAMES.....Supt. Shipman Eng. Co., Rochester, N. Y.
FLADD, FREDERICK C....Supt. Stiles & Parker Press Co., 203-207 Centre St., N. Y. City.
FLATHER, JOHN J.....Instr. Mech. Eng'g, Lehigh University, Bethlehem, Pa.
FOLGER, WILLIAM MAYHEW....Comm'r U. S. N., Navy Yard, Washington, D. C.
FORBES, WM. DUNDERDALE.....Mech. Eng'r, 35 Broadway, Room 39, New York City.
FORD, JOHN D...Engineer Corps, U. S. N., 1522 W. Lauvale St., Baltimore, Md.
FORNEY, MATTHIAS N....Ed. *R. R. and Engineering Journal*, 45 Broadway, and 431 Fifth Ave., New York City.
FORSYTH, ROBERT....Manager Union Steel Co., 3179 Ashland Ave., Chicago, Ill.
FORSYTH, WILLIAM.....Mech. Engineer C. B. & Q. R. R., Aurora, Ill.
FOSTER, C. H..D'tsman Fraser & Chalmers, Fulton and Union Sts., Chicago, Ill.
FOSTER, WILLIAM A... .....Supt. Mach'y Fall Brook Coal Co., and 130 East 3d St., Corning, N. Y.
FOWLER, GEO. L..... .....Room 3, 239 Broadway, New York City.
FOWLER, JOHN.....Eagle Brass Works, 225 Eighth Street, Louisville, Ky.
FOWLER, PERCIVAL....Min'g and Cons. Eng., P. Fowler & Power, 16 St. Helen's Place, London, E. C., England.
FRANCIS, HARRY C.....Chairman, Kensington Engine Works (Ltd.), Beach and Vienna Sts., Philadelphia, Pa.
FRANCIS, JAS....Agent and Eng'r, Prop's Locks and Canals, Merrimac River, 22 Broadway, Lowell, Mass.
FRANCIS, W. H....Sec'y Kensington Eng. Wks. (Ltd.), Beach and Vienna Sts., Phila., Pa.
FRASER, DAVID R.....Fraser & Chalmers, Fulton and Union Streets, Chicago, Ill.
FRASER, NORMAN D...Fraser & Chalmers, Fulton and Union Streets, Chicago, Ill.
FREELAND, FRANCIS T.....Mining & Mech. Eng., Box 23, Leadville, Col.
FREEMAN, JOHN R.....Eng'r & Spec. Insp. Assoc. Factory Mut. Ins. Co., 31 Milk St., Boston, Mass.
FRENCH, E. C...Supt. Deseronto Chemical W'ks and Gas Co., Deseronto, Ontario, Canada.
FRICK, ABRAHAM O..... Frick Mfg. Co., Waynesboro, Pa.
FRITZ, JOHN ....Gen. Supt. Bethlehem Iron Works, Bethlehem, Pa.
FULLER, LEVI K....Vice-Prest. and Supt., Estey Organ Works, Brattleboro, Vt.

GAGE, HOWARD, Asst. Eng. U. S. N....U. S. S. "Lancaster" Gibraltar, Spain. care B. F. Stevens, 4 Trafalgar Square, London, England.
GALE, HORACE B.....Prof. Dyn. Eng'g, Washington University, and 3012 Lucas Ave., St. Louis, Mo.

GALLOUPE, FRANCIS E....Thomson Electric Welding Co., Mason Bldg., 70 Kilby Street, Boston, Mass.
GANTT, HENRY L.....Asst. in Melting Dept. Midvale Steel Wks., Nicetown and 7 E. Penn St., Gmtn., Philadelphia, Pa.
GARRETT, WILLIAM.....Joliet Steel Co., Joliet, Ill.
GAUNT, THOMAS....Gaunt & Martinez, Consult. & Contr. Eng'r, & Archit. Amer. Filtering Press Co., 115 Broadway, N. Y. City.
GEOGHEGAN, STEPHEN J..... Steam Heating Eng'r, 116 Wooster St., New York City.
GEER, JAMES H.....M. M. Cambria S. & I. Co., Johnstown, Pa.
GIDDINGS, C. M.....Gen. Mgr. Sioux City Fdry, Sioux City, Ia.
GILL, JOHN L., JR.....Cons. Eng., 503 Woodlawn Terrace, Phila., Pa.
GILLIS, H A...Gen. Fmn. Office M. M., N. Y., L. E. & W. RR., Elmira, N. Y.
GILMORE, ROBERT J.. .M'g'r The Allen Fire Dept. Supply Co., Providence, R. I.
GOBEILLE, JOS. LEON.....26 York Street, Cleveland, Ohio.
GOLD, SAMUEL F.....Sec. Gold Car Heating Co., Bridge Store No. 6, N. Y. City and Englewood, N. J.
GOOD, WM. E..Supt. Southwark Foundry & Mach. Co., 430 Washington Av., Philadelphia, Pa.
GOODALE, A. M ..... Agt. Boston Mfg. Co., Waltham, Mass.
GOODFELLOW, GEO.....M. M. Penn. Steel Co., Steelton, Pa.
GORDON, ALEX .....Vice-P. and Gen. Man., Niles Tool Works, Hamilton, Ohio.
GORDON, FRED. W.... ...Gordon, Stroebel & Laureau, Mifflin and Meadow Sts., Phila., Pa.
GOSS, W. F. M.....Prof. Prac. Mech., Purdue Univ., Lafayette, Ind. Temporary address, 49 Rutland St., Boston, Mass.
GOUBERT, AUGUSTE A. Treas. Goubert M'f'g Co., 32 Cortlandt St.. New York City.
GOULD, W. V..... Supt. C. B. Rogers & Co., Norwich, Conn.
GOWING, E. H.....Mech. Eng'r, 70 Kilby Street, Boston, Mass.
GRAHAM, J. S.....J. S. Graham & Co., Rochester, N. Y.
GRANT, JOHN J ...Supt. Simonds Rolling Machine Co., and 46 Knox Street., Fitchburg, Mass.
GRAY, G. A.. .... 481 Sycamore St., Cincinnati, Ohio.
GREEN, HOWELL..... .....Jeanesville, Luzerne Co., Pa.
GREENE, ISAAC CHASE. .... Treas. Columbian I. W. & D. D. Co., Baltimore, Md.
GREENE, STEPHEN.....Lockwood, Greene & Co. Mill Eng'g, and Treas. and Gen'l Mgr. Whitefield Mills, Newburyport, Mass.
GREENWOOD, J. H..... ..... 146 Water St., Cleveland, Ohio.
GREGG, JOHN..... Chf. D'tsman Link Belt Mach. Co., 23 So. Jefferson St., Chicago, Ill.
GRIFFIN, EUGENE.....Capt. Corps Eng'rs U. S. A., Gen. Mgr. Ry. Dept. Thomson Houston Elect. Co., Boston, Mass.
GRINNELL, FREDERICK.....Pres. Providence Steam and Gas Pipe Co., Providence, R. I.
GRISWOLD, FRANK L..451 N | N Calle Reconquista Buenos Ayres, Argent. Rep., S. A.
HAGUE, CHARLES A.....Mech. Eng'r, 86 Liberty St., H. R. Worthington, New York City.

HALL, ALBERT FRANCIS.....George F. Blake Mfg. Co., Causeway and Friend Sts., Boston, and 3 Cordis St., Chartlestown, Mass.

HALSEY, F. A .....Constr. Eng. Rand Drill Co, North Tarrytown, N. Y.
HALSEY, JAS. T..... .....Cooke L. & M. Co., Paterson, N. J.
HAMMER, ALFRED E.....Supt. Mall. Iron Fittings Co., Branford, Conn.
HAMMETT, HIRAM G.....Mgr. Estate F. W. Richardson, 464 Eighth St., Troy, N. Y.
HAMMOND, GEO. W.....Fiber Manufacturer, Hotel Hamilton, Boston, Mass., and Yarmouthville, Me.
HAND, FRANK LUDLAM..Gen. Supt. Phila Bureau of Water, 1948 No. 18th St., Philadelphia, Pa.
HAND, S. ASHTON..... .. ..Ferracute Mach. Co., Bridgeton, N. J.
HANDREN, JOHN W.....Handren & Robins, Steam Eng'rs and Dry Docks, 126 Washington St., New York City.
HANSON, AUGUSTUS.....Eng., Leonard & Izard, Consltg. and Contrtg. Elect. Engrs., 425 The Rookery, Chicago, Ill., and Box 83, Maplewood, Ill.
HARDIE, ROBERT .....D'tsm'n Edison Mach. Wks., and 204 Union St., Schenectady, N. Y.
HARDWICK, WILLIAM.....Mech. Supt. and Mgr. Erie Eng. W'ks, Erie, Pa.
HARMON, ORVILLE S....Constr. for P. Lorillard & Co., Jersey City, N. J., and 318 Monroe St., Brooklyn, N. Y.
HARTMAN, JOHN M.....Mech. Eng., 1235 N. Front Street, Philadelphia, Pa.
HARTSHORNE, WILLIAM D.....Supt. Worsted Dept. Arlington Mills, and 500 Broadway, Lawrence, Mass.
HAVEMEYER, HECTOR C.....Pres. Havemeyer Sugar Refining Co., 335 West 14th St., New York City.
HAWKINS, JOHN T....Pres. Campbell Printing Press & Mfg. Co., Taunton, Mass.
HAYES, GEORGE.....Hayes Skylights, 71 Eighth Avenue, New York City.
HAYWARD, FRED. H., of Williams & Potter.....15 Cortlandt St., New York City.
HAYWARD, H. S.....Supt. Motive Power, United Railroads of N. J. Div. P. R. R., Jersey City, N. J.
HAZARD, VINCENT G....The Pusey & Jones Co., and 602 West St., Wilmington, Del.
HEMENWAY, F. F .....*American Machinist*, 96 Fulton St., New York City.
HEMPHILL, JAMES .....Fort Pitt Foundry, Pittsburgh, Pa.
HENDERSON, ALEXANDER, Chf. Eng. U. S. N.....Navy Yard, Boston, Mass.
HENNEY, J. B.....Supt Mo. P., N. Y. & N. E. RR., 93 Bird St., Boston, and Norwood, Mass.
HENNEY, JOHN, JR ...Gen. Supt. Mo. P., N. Y., N. H. & H. RR., New Haven, Conn.
HENNING, GUSTAVUS C.....Inspecting Eng'r, 18 Cedar Street, New York City.
HENRY, WILLIAM THOMAS.....C. and Mech. Engineer, Fall River, Mass.
HENTHORN, JOHN T.....Remington & Henthorn, Mech. Eng'rs, P. O. Box 1271 and 146 Westminster St., Room 21, Providence, R. I.
HERMAN, LUDWIG.....Cons. Eng. and Expert, 29 Euclid Ave., Cleveland, Ohio.
HERRESHOFF, JOHN B.....Herreshoff Mfg. Co., Bristol, R. I.
HERRICK, J. A.....Room 146 Kemble Bldg., 15 Whitehall St., New York City.
HERSHEY, MARTIN E....Supt. F. & M. Dept., Harrisburg Car Mfg. Co., and 128 Walnut St., Harrisburg, Pa.
HEWITT, WM..... ...Vice-Prest. Trenton Iron Co., Trenton, N. J.
HIBBARD, HENRY D..... Linden Steel Co., Pittsburgh, Pa., also West Roxbury, Mass.

HIGGINS, MILTON P.....Supt. Washburn Mach. Shop, and 228 West St., Worcester, Mass.
HIGGINS, SAMUEL.....Div. M. M., N. Y., P. & O. RR., Meadville, Pa.
HILDRUP, W. T.....Gen. M'n'g'r Hbg. Car Mfg. Co., Harrisburg, Pa.
HILDRUP, W. T. JR.....Supt. Car. Wheel Dept. Hbg. Car Mfg. Co., Box 603, Harrisburg, Pa.
HILL, H. A..... .....36-38 Oliver Street, Boston, Mass.
HILL, JAMES W..M. M. & Car Builder, Peoria & Pekin Union R'y Co., Peoria, Ill.
HILL, WARREN E.....V. P. Continental Iron Works, Brooklyn, N. Y.
HILL, WILLIAM...Asst. Supt. Collins Co., Collinsville and P. O. Box 196, Conn.
HILLARD, CHARLES J....Chmn. Centre Mining Co. (Ltd.) Penna. Furn. Hunter, don Co. Pa. and Box 282, Pittsburgh, Pa.
HILLMANN, GUSTAV ..... Naval Architect, City Island, Westchester Co., N. Y.
HOBBS, A. C.....Supt. Union Metallic Cartridge Co., Bridgeport, Conn.
HOE, ROBERT...R. Hoe & Co., 504 Grand and Columbia Streets, New York City.
HOLLAND, JOHN ....Agt. Cocheco Mfg. Co., Dover, N. H.
HOLLERITH, HERMAN .....Expert & Sol. of Patents, 617 Seventh St., Washington, D. C.
HOLLINGSWORTH, SUMNER .....36 Federal Street, Boston, Mass.
HOLLIS, IRA N., Asst. Eng. U. S. N.....Union I. W., San Francisco, Cal
HOLLOWAY, J. F..145 Broadway, Box 2227, and 130 West 59th St., New York City.
HOLLY, FRANK W.....Asst. Mech. Eng. Holly Mfg. Co., Lockport, N. Y.
HOLMBOE, LEONHARD C. B....D'tsman Union Steel Co., 3179 Ashland Ave., Chicago, Ill
HOLMES, ISAAC V.....Beloit, Wis.
HORNIG, JULIUS L.....7 Mandeville Avenue, Jersey City, N. J.
HORNUNG, GEO...Hydr'c and Mech. Eng., 30 East 4th St., Cincinnati, Ohio, and 232 Madison St., Newport, Ky.
HORTON, JAMES A.....Supt. Eng. "Howard Metallic Brush Co.," 12 Pearl St., Boston, and Reading, Mass.
HOWARD, CHARLES P..... James L. Howard & Co., Hartford, Conn.
HOWE, HENRY M Cons. Metallurgist, Room 33, 113 Devonshire St., Boston, Mass.
HUGO, T. W....Supt. Eng. L. S. Elev. Co., and 221 W. 6th Ave., Duluth, Minn.
HUGHES, E. W. M..... Loco. and Car Dept., N. W. State R'y of India, Room 173, Home Ins. Bldg., Chicago, Ill.
HUMPHREY, JOHN.....Pres. and Gen. Mgr. Humphrey Mach. Co., Keene, N. H.
HUMPHREYS, ALEX. C..Gen. Supt. United Gas Imp'm't Co., 33 Drexel Bldg., 5th and Chestnut Sts., Phila., Pa.
HUNT, JOSEPH.....Gen. Manager Cameron Iron & Coal Co., Emporium, Pa.
HUNT, ROBERT W.....Robert W. Hunt & Co., Insp. and Cons. Eng., 631 "The Rookery," Chicago, Ill.
HUNTER, F. S.....Erection Dept. H. R. Worthington Hydr. W'ks, So. Brooklyn, N. Y.
HUTTON, FREDERIC R... Adj. Prof. Mech. Eng. School of Mines, Columbia Coll. and Secretary of the Society, 280 Broadway, Room 232, New York City.
HYDE, CHARLES E.....Marine Eng'r Bath Iron Works, Bath, Me.

IDE, ALBERT L.....Prop'r and Eng. Ide Machine Works, Springfield, Ill.
IDELL, FRANK E .....Mech. Eng'r. 41 Dey St., New York City.
ILLINGWORTH, JOSEPH J....Chief Eng. Utica Steam Cotton Mills, Utica, N. Y.
INSLEE, WM. H.....50 Spruce Street, Newark, N. J.

JACOBI, ALBERT W.....Mech. Engr. Judson Pneumatic St. Ry. Co., 45 Broadway, New York City, and 286 S. 6th St., Newark, N. J.
JACOBUS, D. S.....Asst. Prof. Experimental Shop W'k and Mechs., Stevens Institute, Hoboken, N. J.
JENKINS, JOHN.....Milton Iron Works Rolling Mills, Milton, Pa.
JENKINS, W. R .....Jenkins & Lingle, Engrs. and Machsts., Bellefonte, Pa.
JENKS, WILLIAM H.....Dynamic Eng'r, Brookville, Pa.
JOHNSON, C. R.....Pres. and Gen. Man. The Johnson RR. Signal Co., Rahway, N. J., and 280 Broadway, N. Y. City.
JOHNSON, LEWIS.....Pres. Johnson I. W. Limited, P. O. Box 1200, New Orleans, La.
JOHNSON, WILLIAM.....Penn Yan, Yates Co., N. Y.
JONES, DAVID P.....Bandera Flag Stone Co., P. O. Box 1374, Fort Scott, Kan.
JONES, EDWARD H.....E. H. Jones & Co., Eng'rs and Contractors, 225 River St., Cleveland, O.
JONES, HENRY C.....Hilles & Jones, 1315 Delaware Ave., Wilmington, Del.
JONES, WASHINGTON.....Supt. Port Richmond I. W., and 1632 No. 15th Street, Philadelphia, Pa.
JONES, WM. H....M'n'gr C. E. Jones & Bros., 57 Longworth St., Cincinnati, Ohio.
JONES, WILLIAM R.....Braddock, Pa.
JONES, WILLIS C.....Mech. and Cons. Eng., 5 West 4th St., Cincinnati, O.
JORDAN, SAMUEL S..D'tsman for Insp's of Mach. Cramps' Shipyards, Phila., Pa.

KAFFENBERGER, GUSTAV.....M. E. The Central Paper and Fiber Co., 17 Blackstone Bldg., Cleveland, O., and 183 Waverly Ave.
KANE, JOHN .....J. S. Graham & Co., and 260 Lyall Ave., Rochester, N. Y.
KEBLER, JULIAN A.....Genl. Mgr. Colorado Fuel Co., and 1657 Larimer St., Denver, Col
KELLER, JOHN A.....D'ftsman Black and Clawson Co., Hamilton, Ohio, and No. 140 C St.
KELLY, O. W.....Supt. Springfield Eng. & Thresher Co., Springfield, O.
KEMPSMITH, FRANK...Prest. Kempsmith Mach. Tool Co., 881 Robinson Ave., Milwaukee, Wis.
KENT, EDMUND.....M. M. Chapin Mine, Lock Box 23, Iron Mountain, Mich.
KENT, ELLIS C..D'ftsman, Bethlehem Iron Co., Bethlehem, Pa., & 123 S. High St.
KENT, WM.....Gen. Man. The Springer Torsion Bal. Co., 92 Reade Street, New York City, and Passaic, N. J.
KEPPY, FREDERICK ...Supt. and Eng. Warner Bros., 38 State Street, Bridgeport, Conn.
KERR, WALTER C.....Westinghouse, Church, Kerr & Co., 17 Cortlandt St., New York City.
KETTELL, CHARLES W.....Geo. F. Blake Mfg. Co., Boston, and 19 Brewster Street, Cambridge, Mass.
KIMBALL, HIRAM .....City Forge and Iron Co., Cleveland, Ohio.
KING, CHAS. C..Supt. C. W. Hunt Co., P. O. Box 169, West New Brighton, Richmond Co., N. Y.
KING, CHARLES I....Supt. Mach. Shops, Instr. Pract. Mech. Univ. of Wis., Madison, Wis.
KIRBY, FRANK E.....Eng. Kirby Bros., Detroit, Mich.
KIRCHHOFF, CHARLES.....*Iron Age*, 66 Duane St., N. Y., and 369 Union St., Brooklyn, N. Y.

KIRK, WM. ADDISON LYLE.....Man. and Eng'r Kirk Mach. Agency, Union Iron Wks., Chattanooga, Tenn.
KIRKEVAAG, PETER..... Chief D'tsman and Mech. Eng., Wm. Tod & Co., Youngstown, Ohio.
KLEIN, J. F.....Prof. Mech. Eng. Lehigh University, P. O. Box 495, and 357 Market St., Bethlehem, Pa.
KNIGHT, CHAS. A..Babcock & Wilcox Co., 107 Hope Street, Glasgow, Scotland.
KRAUSE, ARTHUR.....Arch't and Chf. D'tsman F. O. Matthiessen & Wiechers' Sugar Ref., Washington and Essex Sts., Jersey City, N. J.

LADD, JAMES B..... .....Mech. Eng. Penn Steel Co., Steelton, Pa.
LAFORGE, FRED'K HENRY....Ch'f Insp. Conn. Mut. S. B. Insp. & Ins. Co., Waterbury, Conn.
LAIDLAW, WALTER..V. P. and Mgr. Laidlaw & Dunn Co., Mfrs. Pumping Mach., Hydr. Mach., etc., Pearl and Plum Streets, Cincinnati, Ohio.
LAMBERT, WILBUR C..... D'tsman Winchester Repeating Arms Co., 14 Clark St., New Haven, Conn.
LANDRETH, OLIN H..... Prof. Eng'g, Vanderbilt University, Nashville, Tenn.
LANE, HARRY M..Constr. Engr. Providence Cable Tramway, 45 Westminster St., and Narragansett Hotel, Providence, R. I.
LANE, J. S.....Gen. Supt. M. C. Bullock Mfg. Co., W. Lake St. and Talman Ave., Chicago, Ill.
LANPHEAR, O. A..Supt. Univ. Rad. Drill Co. 3d & Lock St., and 3d & Eggleston Ave., Cincinnati, Ohio.
LANZA, GAETANO....Prof. Theor. & App. Mech., Dept. Mech. Eng'g, Mass. Institute of Techn., Boston, Mass.
LARKIN, FRED. A.....Eng'r E. P. Allis & Co., Milwaukee, Wis.
LAUREAU, LOUIS G.....Brown Building, 4th and Chestnut Sts., Phila., Pa.
LAVERY, GEO. L.....M. E. Yale & Towne Mfg. Co., 152 & 154 Wabash Ave. Chicago, Ill.
LAWRANCE, J. P. STUART, P. A. E., U. S. N.....Navy Yard, Norfolk, Va.
LEAVITT, E. D., JR.....2 Central Square, Cambridgeport, Mass.
LEAVITT, FRANK M..V. P. E. W. Bliss Co. W'ks, 17 Adams St., Brooklyn, N.Y.
LEMAN, WILLIAM T.....Supt. Acid Wax and Candle Dept. Tide Water Oil Co., P. O. Box 220, Bayonne, N. J.
LE VAN, W. BARNET...Consulting Eng'r, 3607 Baring Street, Philadelphia, Pa.
LEWIS, JAMES F.....Rand Drill Co., 23 Park Place, New York City.
LEWIS, JOHN L .....Lewis Foundry & Machine Co., Pittsburgh, Pa
LEWIS, WILFRED.....Asst. Eng. for Wm. Sellers & Co. (Icptd.), and 3234 Powelton Ave., Philadelphia, Pa.
LIEB, JNO. W., JR..Chf.Eng.Edison E.L.Co., 4 Via Sta. Radegonda, Milan, Italy.
LIPE, CHARLES E.....6 Holland Street, Syracuse, N. Y.
LIVERMORE, CHARLES W..... ...9 West 30th St., New York City.
LOCKE, WARREN S.....Instructor in Mech., 6 Pallas Street, Providence, R. I.
LOGAN, WM. J.....Logan Iron Works, Commercial & Clay Sts., Brooklyn, N. Y.
LORING, CHARLES H..Chief Eng. U. S. N., 239 Clermont Ave., Brooklyn, N. Y.
LUDLAM, JOS. S.....Merrimac Mfg. Co., Lowell, Mass.
LYNE, LEWIS F.....307 Grove St., Jersey City, N. J.

MCBRIDE, JAMES.....Supt. N. Y. Dye Wood Extract and Chemical Co., 146 Kent St., Brooklyn, N. Y.

McCLATCHEY, A. F.....Chief D'ftsman Wabash R'lw'y, Springfield, Ill.
McDUFFIE, CHARLES D.....Agent Manchester Mills, Manchester, N. H.
McELROY, SAMUEL.....Consulting Eng'r, Room 39, 170 Broadway, N. Y. City, and 50 Johnson Street, Brooklyn, N. Y.
McEWEN, J. H..... .....Ridgway, Pa.
McRAE, JOHN D.....Supt. Morris Machine Wks., Baldwinsville, N. Y.
MACFARLAND, WALTER M., U. S. N.....436 New Jersey Ave., S. E., Washington, D. C.
MACKINNEY, WM. C..Supt. H. W. Butterworth & Sons, York and Cedar Sts., and 2316 E. York Street, Philadelphia, Pa.
MAGRUDER, WM. T.....Prof. Mech. Eng., Vanderbilt Univ., Nashville, Tenn.
MAHON, WM. L..... D'ftsman and Mech. Eng. Frontier Iron and Brass Works, Detroit, Mich.
MAHONY, JAMES..... Mech. Eng., 245 Broadway, New York City
MAILLEFERT, GUSTAVE JACQUES.....Mech. Eng. N. Y., N. H. & H. R. R. R., and 245 Hallock Ave., New Haven, Conn.
MAIN, CHARLES T .....Supt. Lower Pacific Mills, Lawrence, Mass.
MANCHESTER, ALFRED E....D'tsman Bucyrus Fdy. and Mach. Co., Bucyrus, O., and Box 160.
MANNING, CHAS. H., P. A. Eng. U.S.N., Supt. Amoskeag Mills, Manchester, N. H.
MANSFIELD, ALBERT K..... ..Man'g'r Buckeye Eng. Co., Salem, O.
MARTENS, FERDINAND.....India Rubber Comb Co., College Point, L. I.
MASON, J. A....Gen. Mgr. Excelsior Iron W'ks, 100 N. Clinton St., Chicago, Ill.
MASON, WILLIAM.....Supt. Eng'r Winchester Repeating Arms Co., and 15 Dixwell Ave., New Haven, Conn.
MATLACK, DAVID J.....Supt. Foundry, I. P. Morris & Co., and Langhorne, Bucks Co., Philadelphia, Pa.
MATTES, WILLIAM F..Chief Eng. West Superior Iron & Coal Co., Scranton, Pa.
MATTICE, ASA M.....P. A. E. U. S. N., 2 Central Square, Cambridge, Mass.
MAY, DE COURCY.....I. P. Morris & Co., and 1230 Spruce Street, Philadelphia, Pa.
MELVIN, DAVID N.....Linoleumville, Staten Island, N. Y.
MERRICK, J. VAUGHAN.....Roxborough, Philadelphia, Pa.
MESSIMER, HILLARY .....Calumet and Hecla Mining Co., Calumet, Mich.
METCALF, WM.....Miller, Metcalf & Parkin, Pittsburgh, Pa.
METCALFE, HENRY.....Capt. of Ordnance, U. S. A., West Point, N. Y.
METCALFE, JOHN.....Mech. Eng. and D'tsman, Woonsocket, R.I.
MEYER, J. G. ARNOLD...Mech. Eng. *Amer. Macht.*, 96 Fulton St., N. Y., and 122 Fair St., Paterson, N. J.
MIDDLETON, HARVEY.....Supt. Mach. L. & N. RR., Louisville, Ky.
MILES, FREDERICK B.....Bement, Miles & Co., 21st and Callowhill Sts., Philadelphia, Pa.
MILLER, ALEXANDER.....Chief D'tsman, Deeley Iron Works, West 32d Street, and 333 W. 28th Street, New York City.
MILLER, JAMES S.... Chief D'fsman and Asst. Mgr. Stearns Mfg. Co., Erie, Pa.
MILLER, LEBBEUS B.....Singer Mfg. Co., Elizabeth, N. J.
MILLER, LEWIS.....Aultman, Miller & Co., Akron, Ohio.
MILLER, T. SPENCER .....Salesman Eng'r Lidgerwood Mfg. Co., 96 Liberty St., New York City.
MILLER, WALTER .....Mech. Eng. Globe Iron Works, 85 Liberty St., Cleveland, Ohio.

MINOT, H. P....Prop. Industrial Mach. W'ks, and 56 Vine St., Columbus, Ohio.
MIRKIL, THOMAS H., JR....Mech. Eng., Southwark F. & M. Co., 430 Washington Ave., Philadelphia, Pa.
MOFFAT, EDWARD S..... Gen. Man. Lackawanna Iron and Coal Co., Scranton, Pa.
MOHR, LOUIS....Cons. Eng'r, John Mohr & Son, 32 to 42 Illinois Street, Chicago, Ill.
MONAGHAN, WM. F.....Supt. D'fting Dept. L. B. White & Co., 143 Elm St., Room 5, New York City.
MONTGOMERY, H. M.....D'ftsman Mach. Dept. N. Y. and N. E. RR., Norwood, Mass.
MOORE, ENOS L.....Portsmouth F'dry and Mach. Works, Portsmouth, O.
MOORE, JOHN W.....Chief Engineer U. S. N., Navy Yard, Mare Island, Cal.
MOORE, W. J. P..Worthington Pumping Engine Co., 153 Queen Victoria St., London, E. C., England.
MORAVA, WENSEL...Eng'r, Bouton Foundry Co., 2600 Archer Ave., Chicago, Ill.
MOREAU, EUGENE....Cons. Eng. Siemens-Lungren Co., 21st St. and Washington Ave., and Hotel Lafayette, Philadelphia, Pa.
MORGAN, CHARLES H.....Eng. and Contr., 25 Lincoln St., Worcester, Mass.
MORGAN, JOSEPH, JR....Chf. Eng. Cambria Iron Works, and 10 Morris St., Johnstown, Pa.
MORGAN, JAMES. .....Supt. Structural Dept. American Iron & Steel Co., and 2204 Carson St., Pittsburgh, Pa.
MORGAN, THOMAS R., SR.....President Morgan Eng'g Co., Alliance, Ohio.
MORGAN, T. R., JR..... .....Gen. Supt. Morgan Eng'g Co., Alliance, Ohio.
MORRIS, HENRY G.....Eng'r and Mach't, 926 Drexel Bldg., Philadelphia, Pa.
MORRISON, WM. A...Chief Eng'r, Lowell Mfg. Co., P. O. Box 373, Lowell, Mass.
MORSE, CHAS. JAS., Morse Bridge Co., Youngstown, O., & 821 27th St., Denver, Col.
MORSE, CHAS. M.....Mech. Eng., 228 Pearl St., Buffalo, N. Y.
MORTON, HENRY..... Pres. Stevens Inst. Tech., Hoboken, N. J.
MUCKLÉ, M. RICHARDS, JR .....Mech. Eng., 608 Chestnut St. and 1722 Pine St., Philadelphia, Pa.
MUDGE, BENJAMIN C.....Man. Barr. Pumping Eng. Co. and Sales Agent for N. E., 74 Federal Street, Boston, Mass.
MULLEN, JOHN.....Propr. and Gen. Man. Shamokin I. W., Shamokin, Pa.
MÜLLER, MAURICE A.... ...Chf. D'tsman and Mech. Eng. U. S. E. I. Co., Weston Factory, Newark, N. J.
MÜLLER, TEILE H.....Mech. and Cons. Eng. Spreckels Sugar Refinery, Reed St. Wharf, Phila., Pa.
MUNCASTER, WALTER JAMES...Supt. F'dry and Mach. Works, Cumberland, Md.
MURPHY, EDWARD J., Mech. & Consult'g Eng. Hartford S. B. Insp. & Ins. Co., Hartford, Conn.
MURRAY, S. W.....Murray, Dougal & Co., Milton, Northumberland Co., Pa.

NAGLE, A. F.....Mech. Eng., 115 Dearborn Street, Chicago, Ill.
NASON, CARLETON W....Prest. Nason Mfg. Co., 71 Beekman Street, N. Y. City.
NAYLOR, JOHN SAMUEL ...Mech. Eng. People's Works, Front and Girard Sts., and Chestnut Hill, Phila., Pa.
NEWCOMB, CHAS. L..Supt. Deane Steam Pump Co., 252 Pine St., Holyoke, Mass.
NICHOLSON, DAVID KIRK..Asst. Supt. Roll'g Mills, Penn. Steel Co., Steelton, Pa.
NICHOLSON, STEPHEN.....Nicholson & Waterman, Mason and Beverly Sts., and 18 George St., Providence, R. I.

NICHOLSON, W. T.....Prest. Nicholson File Co., Providence, R. I.
NICOLLS, JASPER OLIVER.... W. J. Nicolls & Co., 216 So. Third St., Phila., Pa.
NICOLLS, WM. J.....Treas. Irvona Coal Co., 216 S. 3d St., Philadelphia, Pa.
NORTON, HAROLD P....Asst. Eng. U. S. N., Bureau of Steam Engineering, Navy Dept., Washington, D. C.

O'CONNELL, JOHN C.....Prop'r Cotton Compress, Montgomery, Ala.
ODELL, WM. H.....Mech. Eng'r, 125 Buena Vista Ave., Yonkers, N. Y.
OWEN, FREDERICK N..... ...Civ. and San. Eng., 13 William St., N. Y. City.

PACKARD, L..... Master Car Builder N. Y. C. & H. R. RR. Car Shops, West Albany, N. Y.
PALMER, GEORGE E.....64 So. Canal Street, Chicago, Ill.
PANKHURST, JOHN F Gen. Man. Globe Iron W'ks, 202 Franklin Av., Cleveland, O.
PANTALAONI, GUIDO... .....Westinghouse Elect. Co., Pittsburgh, Pa.
PARKER, CHAS. D...Crompton Loom W'ks and 110 Green St., Worcester, Mass.
PARKER, CHARLES H.....Kendall & Roberts, and 302 Harvard St., Cambridgeport, Mass.
PARKER, WALTER EDWARD.....Agt. Pacific Mills, Lawrence, Mass.
PARKHURST, E. G.....Asst. Supt. Pratt & Whitney Co., and 50 Sumner St., Hartford, Conn.
PARKS, EDWARD H.....Mech. Eng. Brown & Sharpe Mfg. Co., Providence, R. I.
PARKS, WILLIAM R.....Supt. and Mech. Eng. Parks Mfg. Co., 34 Beach St., Boston, Mass.
PARSONS, FREDERICK W....Supt. B. W. Payne & Sons, 351 Columbia St., Elmira, N. Y.
PARSONS, HENRY....Supt. Passaic Machine Works, Watts, Campbell & Co., Newark, N. J.
PARSONS, HARRY DE B.....Mech. Eng., 35 Broadway, Room 70, N. Y City.
PARSONS, WILLARD P.....Walter A. Wood M. & R. Machine Co., Hoosick Falls, N. Y.
PARTRIDGE WM. E...Insp. 2d Dist. B'd of Health, 301 Mott St., New York City, and Passaic Bridge, N. J.
PASSEL, GEORGE W.....D'tsman and Des., J. A. Fay & Co., Cincinnati, O.
PATTON, WILLIAM HENRY.....Supt. Broken Hill Mines, Broken Hill, N. S. Wales, Australia.
PAYNE, DAVID W.....Payne Eng. Co., Elmira, N. Y.
PEABODY, CECIL H.... Asst. Prof. Steam Eng'g Mass. Inst. Tech., Boston, Mass.
PEARSON, WM. ANSON, JR.....Supt. Boies Steel Car Wheel Wks., 620 Adams Ave., Scranton, Pa.
PEARSON, W. B..Man'g'r in Chicago A. L. Ide & Son, 25 Third Ave., Chicago, Ill.
PENDRY, WM. ALLEN..... .....65 Farnsworth Street, Detroit, Mich.
PENNEY, EDGAR.....Gen. Supt. Frick & Co., Waynesboro', Pa.
PENRUDDOCK, J. H....Mech. D'fsman Loco. Shops C. & G. T. R'l'y, Fort Gratiot, Mich.
PERKINS, GEORGE H..Atlantic Ref. Co., 413 So. Broad Street, Philadelphia, Pa.
PERRY, WM. A....H. R. Worthington, 86–88 Liberty Street, and Box 2227, New York City.
PHILIPS, FERDINAND.....Philips & Townsend, No. Penn Junction, and 505 North 21st St., Philadelphia, Pa.
PHILLIPS, FRANKLIN.....Hewes & Phillips Iron Works, Newark, N. J.

PHILLIPS, GEORGE H...Mech. Eng. Hewes & Phillips Iron Works, Newark, N.J.
PICKERING, THOMAS R .....Pickering Governor Co., Portland, Conn.
PIERCE, WM. HENRY.....Asst. to M. M. C. B. & Q. RR., Galesbury, Ill.
PIERCE, NORMAN M.....An. Chem., and Prest. West Nashville Ry., 13 Cole Bldg, Nashville, Tenn.
PITKIN, A. J.....Schenectady Locomotive Works, Schenectady, N. Y.
PITKIN, JULIAN H....Wm. Deering & Co., Chicago, Ill., & P. O. Box 158, Ravenswood, Ill.
PLAMONDON, AMBROSE....A. Plamondon Mfg. Co., 57-67 So. Clinton St., Chicago, Ill.
PLAMONDON, CHAS. A..A Plamondon Mfg. Co., 57-67 So. Clinton St., Chicago, Ill.
POND, FRANK H....Propr. Pond Eng'g Co., 707 & 709 Market St., St. Louis, Mo.
POORE, TOWNSEND ....M. E. Coal Dept. D. L. & W. RR. Co., and 1730 Capouse Ave., Scranton, Pa.
POPE, SAMUEL I...S. I. Pope & Co., Steam Heating, 193 Lake St., Chicago, Ill.
PORTER, CHARLES T..... .. Box 79, Montclair, N. J.
PORTER, HOLBROOK F. J....Supt. Bldgs. & Grds., Columbia College, 49th Street and 4th Ave., New York City.
PORTER, O. S .....Propr. O. S. Porter's Cotton Mills, Covington, Ga.
POSSONS, N. S....Supt. Brush Electric Co., and 615 Case Ave., Cleveland, Ohio.
POST, JOHN, JR.....Mech. Eng'r, 70 Kilby Street, Boston, Mass.
POTTER, CHARLES .....Power Printing Presses, Plainfield, N. J.
POTTER, FREDERICK D..Williams & Potter, 15 Cortlandt St., N. Y. City, and 173 W. 83d St.
POWEL, SAMUEL W..... 433 No. 6th St., Hamilton, Ohio.
PRATT, FRANCIS A.....The Pratt & Whitney Co., Hartford, Conn.
PRATT, NAT. W ....Treas. The Babcock & Wilcox Co., 30 Cortlandt Street, New York City.
PRENTICE, LEON H....Pres't Hay & Prentice Co., 125 and 127 So. Clinton St., Chicago, Ill.
PRENTISS, FRED. H., M'n'g'r and Eng'r N. Y. Steam Co., 2 Cortlandt St., N. Y. City
PRINDLE, EDWARD T.....V. P. and Supt. Prindle Mfg. Co., Aurora, Ill.
PUSEY, CHAS. W ..Gen. Man. The Pusey & Jones Co., and 1112 Washington St., Wilmington, Del.

RADFORD, BENJ. F. Gen. Man. Am. Tool & Mach. Co., 84 Kingston St., Boston, Mass.
RAE, CHAS. WHITESIDE.....P. A. Eng. U. S. N., Office Naval Intelligence Bureau of Navigation, Navy Dept, Washington, D. C.
RAMSAY, H. ASHTON.....Consult'g Eng'r, 406 Second St., Baltimore, Md.
RANDOLPH, LINGAN STROTHER.....Supt. Mo. P. Cumberland & Penn a. RR., Mt. Savage, Md.
RAYNAL, A. H .....Gen. Supt. Richmond L. & M. Works, Richmond, Va.
REED, EDWARD M.....Vice-President, N. Y., N. H. & H. R. RR. Co., New Haven, Conn.
REMICK, OLIVER P....Asst. Eng. U. S. Rev. Marine, U. S. S. "Gallatin," Boston, Mass.
RENWICK, EDWARD S....Mech. Eng. and Exp't, 19 Park Place, New York City.
REYNOLDS, EDWIN. .Gen. Supt. Reliance Works, E. P. Allis & Co., Milwaukee, Wis.
RICE, F. B.....Mech. Eng., 50 W. 4th Street, Dunkirk, N. Y.
RICHARDS, CHARLES B .... Prof. Mechan. Eng'g Sheff. S. S., Yale Univ., and 313 York St., New Haven, Conn.

RICHARDS, FRANCIS H. Mech. Eng. Sol. and Exp't, 253 Main St., Hartford, Conn.
RICHARDS, GEORGE..... Eng. near Broadheath, Manchester, England.
RICHMOND, GEORGE.....Mech. Eng., 2296 Seventh Ave., New York City.
RIDGWAY, J. T.....V. P. Star Rubber Co., Trenton, N. J.
ROBB, DAVID WENTWORTH ....Mech. Supt. A. Robb & Sons, F. & M. Works, Amherst, N. S.
ROBERTS, GEORGE J....Chief D'tsman, R. & D. R. R., 1300 Penn. Ave., Washington, D. C.
ROBERTS. PERCIVAL JR.....Supt. Pencoyd Iron Works, Pencoyd, Pa.
ROBERTS, WILLIAM.....Paper Mfgr., Waltham, Mass.
ROBERTS, THOMAS HERBERT....Mech. Supt. C. & G. T. and D. G. H. & M. R'ys, Detroit, Mich.
ROBERTS, FRANK C.....Civ. and Mech. Eng., Brown Building, Fourth and Chestnut Sts., Room 20, Philadelphia, Pa.
ROBERTSON, R. A., JR...Treas. Bldrs.' Iron Fdry., 22 Codding St., Box 218, Providence, R. I.
ROBINSON, A. WELLS.....Mech. Eng., Bucyrus F. & M. Co., Bucyrus, O.
ROBINSON, G. H.....15 Cortlandt St., New York City.
ROBINSON, J. M.....M. M. and Supt. Mills Bldg., 15 Broad St., New York City.
ROBINSON, S. W.... Prof. Mech. Eng. State University, and 1353 Highland St., Columbus, Ohio.
ROBY, LUTHER A.....Otis Iron and Steel Co., Cleveland, Ohio.
ROCHE, JOHN A... Man. J. A. Fay & Co., 207-9 Lake St., and 433 Warren Ave., Chicago, Ill.
ROGERS, WM. A.....Prof. Physics, Colby University, Waterville, Me.
ROGERS, WINFIELD S.....Mech. Eng. U. S. Arsenal, West Troy, N. Y.
ROMMEL, CHARLES E.....Asst. Eng. U. S. N., Navy Dept., Washington, D. C.
RONEY, W. R....Mech. Eng. Westinghouse Elect. Co., 158 Lake St., Chicago, Ill.
ROOD, VERNON H.....Chief D'tsman, Barr Pumping Eng. Co., Germantown Junction, and 1330 Aidrie St., Philadelphia, Pa,
ROOT, WM. J...Mech. Eng'r, H. R. Worthington, 145 Broadway, New York City.
ROSE, JOSHUA.....Girton Lodge, Park Road, East Twickenham, England.
ROWLAND, THOS. F., JR.....Sec. & Treas. Continental Iron Works, and Station "G," Brooklyn, N. Y.
ROYCE, HARRISON A.....Gen. Mgr. Thomson Elect. Welding Co., 89 State St., Room 40, Boston, Mass.
RUMELY, W. N .....V.-P. and Supt. M. Rumely Co., La Porte, Ind.
RUND, EDWIN...Fuel, Gas and Elect. Eng. Co., 706 Penn Ave., Pittsburgh, Pa.
RUSSELL, WALTER S....V.-P. and Supt. Russel Wheel and Fdy. Co., Walker St. and 149 Jos. Campan Ave., Detroit, Mich.
RUTH, W. M.....Supt. Mach. Shops, Bass Foundry and Mach. Works, and 37 Madison St., Ft. Wayne, Ind.

SAGUE, JAMES EDWARD.....Eng'r of Tests N. Y., L. E. & W. RR., 208 Prospect Place, Brooklyn, N. Y.
SANCTON, EDWARD K...Supt. Penn Ave. Works Dickson Mfg. Co., Scranton, Pa.
SANDERS, NEWELL.....Prest. & Mgr. Chatta. Plow Co., Chattanooga, Tenn.
SANGUINETTI, PERCY A... Chief D'tsman, Franklin Sugar Ref., 820 No. Fifth St., Philadelphia, Pa.
SARGENT, JOHN W ..... Chiel D'ftsman, Dickson Mfg. Co., Scranton, Pa.
SCHEFFLER, F. A.....Supt. Erie City Iron Works, Erie, Pa.

SCHLEICHER, ADOLPH W.....M. E. Schleicher, Schumm & Co., 3313 Walnut Street, Philadelphia, Pa.
SCHUHMANN, GEORGE.....Supt. Penn. Iron Works, 50th St. and Marion Ave., and 2422 Poplar St., Philadelphia, Pa.
SCHUMANN, F.....Schumann & Lynch, Tacony Iron Works, Tacony, Phila., Pa.
SCHUTTE, LOUIS.....Mech. Eng. 12th and Thompson Sts., Philadelphia, Pa.
SCHWAMB, PETER..... ....Dir. Workshops Mass. Inst. Tech., Boston, Mass.
SCOTT, IRVING M.....Union Iron Works, P. O. Box 2128, San Francisco, Cal.
SCOTT, OLIN..Mech. Engineer and Supt. for E. I. Dupont de Nemours & Co., and The Laflin & Rand Powder Co., 26 Murray St., New York City, and Bennington, Vt.
SCOTT, WALTER WILLIAM.....Mech. and Cons. Eng'r, 34 Park Row, Room 41, N. Y. City.
SCOVEL, MINOR....Pres. The Scovel and Irwin Const. Co., 9 Cole Bldg., Nashville, Tenn.
SCOVILLE, H. H.....Prop'r Scoville I. W., 250–254 So. Clinton St., Chicago, Ill.
SCRANTON, W. H.....Oxford Furnace, Oxford, N. J.
SCRIBNER, CHARLES W....Prof. Mech. Eng. Iowa State University, Ames, Iowa.
SEDERHOLM, EDWARD THEODOR.....Mech. Eng. Fraser & Chalmers, Chicago, Ill.
SEE, HORACE.....William Cramp & Sons' Ship and Engine Building Co., Beach & Norris Sts., and 1230 Spruce St., Philadelphia, Pa.
SEE, JAMES W.....Mech. Eng'r, Hamilton, Ohio.
SELLERS, COLEMAN.....Prof. of Eng'g and Cons. Eng., 3301 Baring Street, Philadelphia, Pa.
SELLERS, COLEMAN, JR.....Asst. Man. Wm. Sellers & Co. (Incp.), 1600 Hamilton St., and 410 N. 33d Street, Philadelphia, Pa.
SELLERS, MORRIS.....6 Ashland Block, Chicago, Ill.
SELLERS, WILLIAM.....1819 Vine Street, Philadelphia, Pa.
SHACKFORD, JAMES M....Chief D'tsman, Mach. Dept. C. & A. R. R., Bloomington, Ill.
SHARP, JOEL.....Prest. Buckeye Engine Co., Salem, Ohio.
SHAW, T. JACKSON.....Mech. Eng. Harlan & Hollingsworth, Wilmington, Del.
SHELDON, THOS. C.....Supt. Lancaster Mills, Boylston, Mass.
SHEPPARD, FRANK L..... Supt. Mo. P. Penna. Div. P. RR., Altoona, Pa.
SIMONDS, GEO. F.....Prest. Simonds Roll'g Mach. Co., Fitchburg, Mass.
SIMPKIN, WILLIAM.....Simpkin & Hillyer, 1105 Main St., Richmond, Va.
SINCLAIR, ANGUS.....*National Car and Locomotive Builder*, Morse Bldg., 140 Nassau St., New York City.
SKINNER, L. G..... ....Skinner & Wood, Erie, Pa.
SMALL, H. J.....Asst. Supt. Mo. P. P. & R. RR., Reading, Pa.
SMITH, A. P.....Pat. Expt. & Sol., 606 Eleventh St., N. W., Washington, D. C.
SMITH, C. A.....171 Broad St., Pawtucket, R. I.
SMITH, CHAS. D.....H. D. Smith & Co., Plantsville, Conn.
SMITH, CHARLES H. L.....Supt. Union Porcelain Works, 300 Eckford St., and 119 Milton St., Greenpoint, Brooklyn, E. D., N. Y.
SMITH, GEORGE H.....Beaman & Smith, Harrison and Westfield Streets, and 28 Arch St., Providence, R. I.
SMITH, HORACE S.....Gen. Supt. Joliet Steel Works, Joliet, Ill.
SMITH, JESSE M..... .....Mech. and El. Eng. and Exp't in Pat. Cases, 36 Moffat Block, Detroit, Mich.
SMITH, OBERLIN.....Pres't Ferracute Machine Company, Bridgeton, N. J.

SMITH, SCOTT A....Propr. Prov. Oil Co., and V.-P. Prov. Mut. S. B. Ins. Co., Box 1886, Providence, R. I.
SMITH, SIDNEY L.....Supt. Roxbury Carpet Co., and 195 West Newton Street, Boston, Mass.
SMITH, T. CARPENTER....Eng'r and Contr., 608 Chestnut St., Philadelphia, Pa.
SMITH, WILLIAM FRASER.....Mech. & Hydr. Eng. & Commiss. Agt., 10 California St., San Francisco, Cal.
SNELL, HENRY I.... .....M. E., 135 North Third Street, Philadelphia, Pa.
SNOW, WM. W....Supt. and Gen. Mgr. Ramapò Wheel and Foundry Co., Hillburn, N. Y.
SORGE, A., JR....Mech. Eng. and Exp't, Bee Hive Bldg., Graves St., Rochester, N. Y.
SOULE, RICHARD H .....Gen. Agent Union Sw. & Sig. Co., Swissvale, Pa.
SOUTHWORTH, EDWARD P. B.....Mech. D'tsman Woodbury Eng Co., 254 Mill St., Rochester, N. Y.
SOWTER, ISAAC GEORGE.....Mech. Eng. & Chf. D'tsman Dry Dock Eng. Wks., 867 E. Congress St., Detroit, Mich.
SPANGLER, H. W.....A. E. U. S. N., Asst. Prof. Dyn. Eng. Univ. of Penn., Philadelphia, Pa.
SPIERS, JAMES .....Mech. Eng'r Fulton Iron Works, San Francisco, Cal.
SPIES, ALBERT....Mech. Eng., 22 Cortlandt St., New York City, and 901 Summit Ave., J. C. Heights, Jersey City, N. J.
SPRAGUE, WM. T.....M'n'g'r Link Belt Mach. Co., 200 Washington Ave., So. Minneapolis, Minn.
SPRAGUE, WILLIAM W.....Gen. Frman. C., R. I. & P. Ry. Shops, and 5317 Wentworth Avenue, Town of Lake, Ill.
SPRINGER, J. H., SR.....Supt. Niles Tool Works, Hamilton, Ohio.
STAHL, ALBERT W.....Asst. Naval Constructor U. S. N. Naval Acad., Annapolis, Md.
STANWOOD, JAMES B..Mech. Eng. and Director Tech. School, 22 Carlisle Building, Cincinnati, Ohio, and Auburn and Evans Sts., Mt. Auburn.
STARBUCK, GEO. H....U. S. Supervising Inspector Steam Vessels, Room 152 Post Office Building, New York City.
STEARNS, ALBERT.....Supt. Church & Co.'s Chemical Works, 596 Lorimer Street, Brooklyn, N. Y.
STEARNS, THOMAS B., Mining and Mech'l Eng'r, 4 Duff Block, Denver, Colorado.
STEEL, CHARLES.....Mgr. New Home Sewing Mach. Co., 30 Union Square. New York City.
STETSON, GEORGE R....Supt. Morse Twist Drill and Machine Co., New Bedford, Mass.
SCHWANHAUSSER, WILLIAM.....Gen. Fmn. Hyd. Works H. R. Worthington., So. Brooklyn and 417 Eighth St., Brooklyn, N. Y.
STEVENSON, ARCHY A.....Standard Steel Wks., Lewiston, Pa.
STEWARD, JOHN F.....Mechan. and Pat. Expt., Wm. Deering & Co., 1135 Dunning Street, Chicago, Ill.
STEWART, WALTER GREENWAY.....Mech. Eng. & Pat. Atty., 536 Penn St., Reading, Pa.
STILES, NORMAN C.....Treas. Stiles & Parker Press Co., Middletown, Conn.
STILLMAN, FRANCIS HILL .....210 E. 43d St., New York City.
STILLMAN, OSCAR B .....58 William Street, New York City.
STIRLING ALLAN .....74 Cortlandt St., New York City.

STONE, HENRY B.....2d V.-P. C. B. & Q. RR., 207 Adams St., and 45 Bellevue Place, Chicago, Ill.
STONE, JOSEPH.....85 Milk St., Boston, Mass.
STRALE, ALLAN.....D'ftsman Fraser & Chalmers, Fulton and Union Sts., Chicago, Ill.
STRATTON, E. PLATT....Marine & Consult. Eng., 4 Hanover St., New York City, and College Point, Long Island, N. Y.
STRONG, GEORGE S..Chf. Eng. Strong Loco. Co., 45 Broadway, New York City.
STUTZ, SEBASTIAN.....Mining & Mech'l Eng'r, McClintock Bldg., P. O. Box 112, Pittsburgh, Pa.
SUNSTROM, KARL J.....Mech. Eng., 6 Lancaster St., Worcester, Mass.
SUPLEE, HENRY H.....Mech. Eng'r, 907 Arch St., Philadelphia, Pa.
SVENSON, JOHN. West Superior Iron and Steel Co., Coal Exchange, Scranton, Pa.
SWAIN, GEORGE F.....Assoc. Prof. of Civil Eng. Mass. Inst. of Tech., Boston, Mass.
SWASEY, AMBROSE.....Warner & Swasey, Cleveland, Ohio.
SWEENEY, JOHN M.....Mech. Eng., Wheeling, W. Va.
SWEET, JOHN E.....Straight Line Engine Co., Syracuse, N. Y.
SWINSCOE, CHARLES.....M'n'g'r Clinton Wire Cloth Co., Clinton, Mass.

TABOR, HARRIS.....The Tabor Mfg. Co., 111 Liberty St., New York City.
TALLMAN, FRANK G.....Gen. Supt. Carnegie, Phipps & Co., Ltd., Beaver Falls, Pa.
TATNALL, JAMES EDWARD.....Metallurgist and Engineer, Lock Box 43, South Bethlehem, Pa.
TAYLOR, FRED W...Chief Eng'r Midvale Steel Co., Nicetown, Philadelphia, Pa.
TAYLOR, J. ARCHIE.....M. E. The Pusey & Jones Co.. Wilmington, Del.
TAYLOR, STEVENSON..V.-P. and Gen. Supt. W. & A. Fletcher Co., 266 West St., and 328 West 57th St., New York City.
TERRELL, CHARLES E. ...M. M. for Jos. Dixon Pencil Works, 298 Montgomery St., Jersey City, N. J.
THISSELL, EARL A.....Mgr. Emerson Power Scale Co., Lowell, Mass.
THOMAS, CHARLES W.....Mech. Eng., 786 Broad St., Newark, N. J.
THOMAS, EDWARD W.....Agt. Tremont and Suffolk Mills, and 12 Butterfield St., Lowell, Mass.
THOMAS, JOHN.....Supt. Thomas Iron Co., Hokendauqua, Pa.
THOMAS, SAMUEL.....Catasauqua, Pa.
THOMSON, JOHN.....Mech. Eng'r and Mfr. Water Meters and Pr't'g Mach., Temple Court, New York City.
THOMPSON, CHARLES T...Mech. Eng. I. P. Morris Co., and 2247 Richmond Street, Philadelphia, Pa.
THOMPSON, EDGAR B.....Chief D'tsman C. & N. W. R'y, Chicago, Ill.
THOMPSON, EDWARD P. .....M. E. Sol. Pat. & Cons. Elect., 5 Beekman St., New York City.
THOMPSON, ERWIN W.....M'g'r Southern Cotton Oil Co., Houston, Texas.
THORNE, WM. H.....Wm. Sellers & Co., Incorporated, Phila., Pa., and Gowen Av., Mt. Airy.
THURMAN, GALEN E.....M'g'r Ainslie, Cochran & Co., 920 West Main St., Louisville, Ky.
THURSTON, ROBERT H....Director Sibley College, Cornell University, Ithaca, N. Y.

TILDEN, JAMES A.....Eng. and Supt. for Hersey Bros., So. Boston, Mass.
TOBEY, GEORGE A.....Supt. U. S. E. L. Co., Newark, N. J.
TOLMAN, EDWARD F.....Treas. Wheelock Eng. Co., Worcester, Mass.
TOWLE, WM. MASON.....Straight Line Eng. Co., Syracuse, N. Y.
TOWNE, HENRY R.....Pres. Yale & Towne Mfg. Co., Stamford, Conn.
TOWNSEND, DAVID ....M. E. Bush Hill Iron Works, and 1723 Wallace St., Philadelphia, Pa.
TRAUTWEIN, ALFRED P.....Supt. The Hendrick Mfg. Co., Carbondale, Pa.
TREGELLES, HENRY..... 200 Powers Block, Rochester, N. Y.
TRIBE. JAMES.....Head D'fsman Corliss Eng. Co., Providence, R. I.
TROWBRIDGE, WM. P.....Prof. Engineering Columbia College, 49th St. & 4th Ave., New York City.
TRUMP, CHARLES N.....Pres. Trump Bros. Mach. Wks., 511 West 3d St., Wilmington, Del.
TUTTLE, EDGAR G.....Min'g Eng'r Cambria I. W., Johnstown, Pa.

UEHLING, EDWARD A.....Supt. Blast Furn., Bethlehem Iron Co. and 312 So. New St., Bethlehem, Pa.
ULMANN, CHAS. J.....M. E., 113 Grand St., New York City.
UNDERWOOD, F. H.....Pres. Underwood Mfg. Co., Tolland, Conn.
UNGER, JOHN S.....Schoenberger & Co., Pittsburgh, Pa.
UNZICKER, HERMAN .....Mech. Eng. Gail, Bumiller & Unzicker, Chicago I. W., Willow St. & Hawthorn Ave., Chicago, Ill.
UPSON, LYMAN A.....Supt. Hartford Carpet Co., Thompsonville, Conn.

VAILE, J. HENRY.....V.-P. and Supt. The Smith & Vaile Co., Dayton, Ohio.
VANDERBILT, AARON....Supt. N. Y. & Cuba M. S. S. Co., 113 Wall Street, New York City.
VAN VLECK, FRANK.....Los Angeles Cable Ry. Co., Ardmoor, foot of 6th St., Los Angeles, Cal.
VAN WINKLE, FRANKLIN.....Cons. Eng., 91 Liberty Street, New York City.
VERASTEGUI, ALBERT.....Mech. Eng., 116½ Havana St., Havana, Cuba.
VOGT, AXEL S.....Mech. Eng., Penn. R. R. Co., Altoona, Pa.
VOORHEES, PHILIP R..... .....Patent Att'y, 32 Nassau Street, N. Y. City.

WALKER, JOHN .....Manager Walker Manufacturing Co., Cleveland, Ohio.
WALL, EDWARD B.....Supt. M. P., P. C. & St. L. RR., Columbus, Ohio,
WALLIS, JOHN MATHER.....Supt. Mo. Power P. W. and B. RR., Philadelphia, Pa.
WALLIS, PHILIP .....Mast. Mech. C., B. & Q. RR., Beardstown, Ill.
WALWORTH, ARTHUR C....Prest. Walworth Constr. and Supply Co., 134 Congress St., Boston, Mass.
WARD, W. E..... .....Russell, Burdsall & Ward, Port Chester, N. Y.
WARNER, WORCESTER R.....Warner & Swasey, Cleveland, Ohio.
WARREN, B. H..Supt. Hancock Inspirator Co., Chickering Station, Boston, Mass.
WARREN, JOHN E.....Agt. Paper and Pulp Mills, Cumberland Mills, Me.
WARRINGTON, JAMES N....Sec'y Vulcan I. W., 86 No. Clinton St., Chicago, Ill.
WARRINGTON, JESSE ....Mech. Supt. Nordyke & Marmon Co., 289 Union St., Indianapolis, Ind.
WATERMAN, JOHN S .....Brown & Sharpe, Providence, R. I.
WATSON, WM...Sec'y Amer. Acad. Arts & Sci., 107 Marlboro' St., Boston, Mass.

WATTS, GEORGE W..... Mech. Eng. Niles Tool Wks., 705 Arch St., Phila., Pa.
WEBB, JOHN BURKITT ....Prof. App. Math. Stevens Inst. Tech., Hoboken, N. J.
WEBBER, HENRY, JR....Dept. Coal Mine Mach., Dickson Mfg. Co., Scranton, and Dunmore, Pa.
WEBBER, SAMUEL.....Hydr. & Dyn. Engineer, Charlestown, N. H.
WEBBER, SAMUEL S.....Asst. Mgr. Trenton Iron Co., Trenton, N. J.
WEBBER, WILLIAM OLIVER.... Consulting Engineer and Expert in Pat. Cases, 88 Mason Building, Boston, Mass.
WEBSTER, HOSEA.... Mech. Eng. H. R. Worthington, 95 Lake St., Chicago, Ill.
WEBSTER, J. F....Supt. Champion Bar, Knife & Machine Co., Springfield, Ohio.
WEBSTER, JOHN H .....Supt. Standard Ref. Co., 24 Broad Street, Boston, Mass.
WEBSTER, WILLIAM R..C. E. and Bridge Inspector, 424 Walnut St., Phila., Pa.
WEEKS, GEORGE W..... Agent Lancaster Mills, Clinton, Mass.
WEICKEL, HENRY.....Asst. Foreman Drawing Room Yale & Towne Mfg. Co., 1 and 69 Gardner Street, Stamford, Conn.
WEIGHTMAN, WM. H..Mech. Eng. and Patents, 24 Park Place, New York City.
WELLMAN, SAMUEL T.....1080 Willson Ave., Cleveland, Ohio.
WELLS, EBEN F .....Cash'r W. S. Iron and Steel Co., West Superior, Wis.
WELLS, J. LELAND.....Gillis & Geoghegan, 116 Wooster St., and 875 East 169th Street, New York City.
WEST, THOMAS D.....Mgr. Thomas D. West Foundry Co., Cleveland, Ohio.
WESTINGHOUSE, H. HERMAN.....Gen. Man. Westinghouse Air Brake Co., Liberty Ave. & 25th St., Pittsburgh, Pa.
WESTON, EDWARD ..... Elec. Eng., 645 High St., Newark, N. J.
WHEELER, FREDERICK M..George F. Blake Mfg. Co., 93 Liberty St., N. Y. City.
WHEELER, HERBERT A...Prof. of Mining Washington University, St. Louis, Mo.
WHEELOCK, JEROME.....Worcester, Mass.
WHITAKER, EZRA J.....Chief Eng. U. S. N., U. S. Rec'v'g Ship "Vermont," Navy Yard, Brooklyn, N.Y.
WHITE, H. C.....Manager in N. Y. for Phœnix Iron Wks. (Ltd.) 16 Dey St., New York City.
WHITE, JOSEPH J....Manager H. B. Smith Machine Co., 925 Market Street, Philadelphia, Pa.
WHITE, MAUNSEL .....Bethlehem Iron Co., Bethlehem, Pa.
WHITE, WILLIAM, JR.....Mining Eng., 35 Fifth Ave., Pittsburgh, Pa.
WHITEHEAD, GEORGE E....Supt. Nut & Bolt W'ks, Rhode Island Tool Co., West River St., and No. 965 High St., Providence, R. I.
WHITEHILL, ROBERT .....Mfg. Eng's, Boilers and Refrig. Mach., Grand Ave., Newburgh, N. Y.
WHITHAM, JAY M..... Prof. Engineering Ark. Ind. Univ., Fayetteville, Ark.
WHITING, GEORGE B.. Mech. Eng'r, Harlan & Hollingsworth, Wilmington, Del.
WHITING, S. B....Gen. Man. Calumet & Hecla Mining Co., 12 Ashburton Place, Boston, and 24 Highland Ave., Cambridgeport, Mass.
WHITLOCK, ROGER HADDOCK....Prof. Mech. Tex. State Ag'l and Mech. College, College Sta., Brazos Co., Tex.
WHITNEY, BAXTER D ... .Winchendon, Mass.
WHITTIER, CHAS.....Prest. & Gen'l Mgr., 1176 Tremont St., and 50 Winthrop Street, Boston, Mass.
WIGHTMAN, D. A.....Supt. Pittsburgh Loco. Works, Allegheny, Pa.
WILCOX, JOHN F.....Eng. with J. P. Witherow, Lewis Block, and 6th Ave. and Smithfield St., Pittsburgh, Pa.

WILCOX, STEPHEN.....The Babcock & Wilcox Co., 30 Cortlandt Street, New York City.
WILDER, MOSES G. Mfr. Volumetric Regulators, 816 Cherry St., Philadelphia, Pa.
WILEY, WM. H.....15 Astor Place, New York City.
WILKIN, W. M..... Des. & Sisman Stearns Mfg. Co., Erie, Pa.
WILLCOX, CHARLES H ....Mech. Eng. Willcox & Gibbs S. M. Co., 658 Broadway, and 32 E. 62d St., N. Y. City.
WILLIAMS, J. NEWTON.....York and Washington Sts., and 81 Columbia Heights, Brooklyn, N. Y.
WILLIAMS, SAMUEL T...S. T. Williams & Co., Cons. and Contr. Eng'r, 18 So. Broad St., Philadelphia, Pa.
WILLIAMSON, WM. C....Williamson Bros. E. & B. Works, Richmond & York Streets, Philadelphia, Pa.
WILLSON, FREDERICK NEWTON....Prof. Desc. Geom. and Tech. Drawing, Princeton College, Princeton, N. J.
WILSON, JAMES EDWARD .....203 West 122d St., New York City.
WINTER, HERMAN.....Const. Eng. & Naval Architect, Pier 11, N. R., New York City, and 165 Taylor St., Brooklyn, N. Y.
WITHEROW, JAMES P.....Eng. and Contr., Lewis Block, and 6th Ave. and Smithfield St., Pittsburgh, Pa.
WOLFF, ALFRED R.....Consult. Eng., 315 Potter Building, 38 Park Row, New York City.
WOHL, LOUIS .... Mech. Eng. Fraser & Chalmers, Chicago, Ill.
WOOD, DE VOLSON.....Prof. Mech. Eng'g Stevens Inst. Tech., Hoboken, and Boonton, N. J.
WOODBURY, C. J. H.....2d V.-P. Man'f'rs' Mut. Ins. Co., 31 Milk Street, P. O. Box 112, Boston, Mass.
WOODBURY, L. S .....2d Asst. Supt. Calumet & Hecla M'n'g Co., Calumet, Mich.
WOODS, ARTHUR T.....Prof. Mech. Eng., University of Ill., Champaign, Ill.
WOODWARD, CALVIN M....Prof. Math. and App. Mech., Washington Univ., St. Louis, Mo.
WOOLSON, OROSCO C....Eng'r and Agt. Amer. S. B. Ins. Co., 800 Broad St., Newark, N. J.
WOLCOTT, FRANK P.....Supt. I. B. Coleman's Foundry, Elmira, N. Y.
WORCESTER, FRANKLIN E..Asst. Supt. Mo. P. Duluth, S. Shore & Atlantic Ry., Marquette, Mich.
WORTHINGTON, CHARLES C.....H. R. Worthington, 145 Broadway, New York City.
WRIGHT, JOHN Q.... Putnam Machine Co., 115 Liberty Street, New York City.
WYMAN, HORACE W....Worcester Drop Forging Works, 30 Bradley Street, Worcester, Mass.

YORK, L. D.....Supt. Burgess Steel and Iron Co., Portsmouth, Ohio.
YOST, THOMAS MILTON....Mech. Eng'r Am. Tube and Iron Co, Middletown, Pa.

ZIMMERMANN WM. F.....U. S. E. I. Co., Factory 29 Plane St., Newark, N. J.

Associates.

ALLER, A.....Mech. and Cons. Engineer, 109 Liberty Street, New York City.

BAGG, S. F.....Sec'y and Treas. Watertown St'm Eng. Co., Watertown, N. Y.
BAILEY, E. B .....Manag'r The E. Horton & Son Co., Windsor Locks, Conn.
BAILEY, W. H.....Agt. Am. Tube Works, 20 Gold Street, New York City.
BROOKS, THOMAS H.....Iron Founder, 708–712 Lake St., Cleveland, O.
BROWN, DAVID W.....Park Benjamin, Sci. Expert Office, 35 Wall St., New York City.
BURNHAM, WM.. Sec'y and Treas. The Standard Steel W'ks, 220 So. Fourth St., Philadelphia, Pa.

CAMPBELL, ANDREW C....D'tsman Farrel F. and M. Co., Waterbury, Conn., & 26 No. Willow St.

DICK, JOHN.....Mang'r Phœnix Iron Works, Meadville, Pa.
DODGE, WALLACE H.....Pres. Dodge Mfg. Co., Mishawaka, Ind.
DOUGLAS, E. V.....335 Bullitt Bdg., Philadelphia, Pa.

EVANS, EDWIN T.....L. S. Transit Co., 189 North Street, Buffalo, N. Y.

GIBSON, WM., JR.....Publisher *Engineering and Building Record*, 82–84 Fulton Street, New York City.
GILKERSON, JAMES A.....Gilkerson Mach. Works, Homer, Cortland Co., N. Y.

HALL, JOHN H..Treas. Pickering Governor Co., Portland, Conn., and Gen'l M'g'r Colts Fire Arms Co., Hartford, Conn.
HALLOCK, JOHN KEESE.....Att'y-at-Law, 8 So. Park Row, Erie, Pa.
HASKINS, HARRY S...Edwin Harrington, Son & Co., 1505 Penn Ave., Phila., Pa.
HURFORD, O. P.....Link Belt M'ch'ny Co., 11–13 So. Jefferson St., Chicago, Ill.
HUSTON, CHARLES L....Mfr. Boiler Plate, Chas. Huston & Sons, Coatesville, Pa.

LEMOINE, LOUIS RICE.....R. D. Wood & Co., 400 Chestnut St., Phila., Pa.
LOW, FRED R..... ....Mech. Editor *Power*, 113 Liberty St., New York, and 121 Sumner Ave., Brooklyn.

MCCOLLIN, THOMAS H.....Photographic Chemist, 635 Arch St., Philadelphia, Pa.
MCFARREN, S. J.....Contractor, 111 Water Street, Pittsburgh, Pa., and Walker Flats, McKeesport, Pa.
MAGEE, FRANK A.....Salesman Elect'l Dept. The E. S. Greely Co., 5 and 7 Dey Street, New York City.
MILLER, HORACE B.....*American Machinist*, 96 Fulton Street, New York City.
MOORE, CHARLES A.....Manning, Maxwell & Moore, 111 and 113 Liberty St., New York City.
MOORE, LYCURGUS B.....*American Machinist*, 96 Fulton Street, New York City.

NOYE, ALBERT A.....Steam Eng. Dept. Jno. T. Noye Mfg. Co., Buffalo, N. Y.

PIERCE, WALTER L.....Sec'y Lidgerwood Mfg. Co., 96 Liberty St., N. Y. City.
PORTER, GEO. A.....With Porter, Jackson & Co., So. Chicago, Ill.
PUTNAM, H. C.....President Chippewa Valley Bank, Eau Claire, Wis.

RAYMOND, JAMES H.....Pat. Attorney, 225 Dearborn Street, Chicago, Ill.
RUPLEY, GEO.....Gen'l Supt. Imp't and Elevator Co., Duluth, Minn.
RUSSELL, C. M....Sec'y Russell & Co. and V.-P. and Treas. Massillon Elect. Co., Massillon, Ohio.

SELDEN, GEORGE.....Pres. Erie City I. W., Erie, Pa.
SIMPSON, GEORGE R..2d Asst. Examiner U. S. Patent Office, No. 30 Patent Office, and 714 Eleventh Street, N. W., Washington, D. C.
SMITH, S. DECATUR.....Iron Fdry., E. York and Moyer Sts., Philadelphia, Pa.
SPERRY, CHARLES.....Port Washington, Queens County, L. I., N. Y.
STANGLAND, B. F.....Supt. Mech. Ventilation, Howard & Morse, 45 Fulton Street, New York City.
STOCKLY, GEO. W.....Pres't Brush Electric Co., Cleveland, Ohio.

TEMPLE, W. C....V.-P. of the Metropolitan Electric Service Co., Equitable Building, 120 Broadway, and 575 Madison Ave., N. Y. City.
TUCKER, WILLIAM B.....Mech. Eng., 225 Broad Street, Elizabeth, N. J.

WAINWRIGHT, C. D.....Pres't Wainwright Mfg. Co., 71–73 Oliver Street, Boston, Mass.
WATSON, H. F.....Paper Manufacturer, Erie, Pa.
WHITNEY, WM. M.....Winchendon, Mass.
WOOD, WALTER.....R. D. Wood & Co., 400 Chestnut Street, Philadelphia, Pa.

Juniors.

ABORN, GEORGE P.....D'ftsman Knowles Steam Pump Works, Warren, Mass.
AGUILLERA, A., JR .....Puerto Principe, Cuba.
ANDERSON, W. E.....Adjunct Prof. Eng. and Supt. of Shops Ark. Ind. Univ., Fayetteville, Ark.
ARMSTRONG, E. J.....Supt. Weston Eng. Co., Painted Post, N. Y.

BABCOCK, W. IRVING.....Supt. Union Dry Dock Co., Buffalo, N. Y.
BANG, HENRY A.....Eng. Nat. Water Purifying Co., 145 Broadway, and 1214 Broadway, N. Y. City.
BARR, HARRY P.....Ass't Inspector B. M. M. F. Ins. Co., 31 Milk St., Boston, Mass.
BEACH, CHARLES S.....H. E. Bradford & Co., Bennington, Vt., Lock Box 124.
BIRD, WILLIAM W....Ass't in Mech. and Drawing Polytech. Institute, Worcester, Mass.
BURCHARD, ANSON W.....Mech. Eng. J. M. Ives & Co., Box 8, Danbury, Conn.
BURDSALL, ELWOOD, JR.....Port Chester, Westchester Co., N. Y.
BURGESS, ISAAC CHESBRO...Inspector, 31 Milk St. and Hyde Park, Boston, Mass.
BURNS, A. L.....D'tsman, Jabez Burns & Sons, 3 Worth St., New York City, and 620 Greene Ave., Brooklyn.

CALDWELL, ANDREW J.....H. R. Worthington, Hydraulic Works, So. Brooklyn, N. Y.

COLE, L. W.....M. M. Eagle Square Mfg. Co., So. Shaftsbury, Vt.
CONANT, THOMAS P.....Electric Accumulator Co., 44 Broadway, New York City.
CONRAD, HUGH VINCENT.....Rand Drill Co., 23 Park Place, New York City.
CRUIKSHANK, BARTON.....Supt. Des. Dept. Brady Mfg. Co., 206 South Oxford Street, Brooklyn, N. Y.
CURTIS, RALPH E.....Asst. Mech. Eng. Mass. Inst. Tech., Boston, Mass.

DAY, F. M.....Hopedale, Mass.
DEWSON, EDWARD H., JR... M. M. St. Jo. & Grand Island Ry., St. Joseph, Mo.
DIXON, W. F.....Cooke L. & M. Co., Paterson, N. J.
DOCKAM, EDWARD HERBERT....Asbestos Pckg. Co., 169 Congress St., Boston, Mass.

EARLE, EDGAR P..... Asst. to Supt. Pardee Sons & Co., Hazleton, Pa.
EBERHARDT, F. L.....(Firm of E. Gould and Eberhardt), 97 Congress St., Newark, N. J.
EDWARDS, V. E..... .....Mech. Eng., North Chelmsford, Mass.
FIRESTONE, JOE F.... F'm'n Mach. Shop Columbus Buggy Co., Columbus, Ohio.
FORAN, GEO. J.....Geo. F. Blake Mfg. Co., 111 Federal St., Boston, Mass.
FOSTER, ERNEST H.....H. R. Worthington Hydr. Works, So. Brooklyn, N. Y., and Englewood, N. J.

GARFIELD, ALEXANDER STANLEY.....Box 1641, Boston, Mass.
GLASSER, CHARLES, H.....D'tsm'n Rand Drill Co., No. Tarrytown, N. Y.
GOSS, EDWARD O.... D'ftsman and Mech. Eng. Scoville Mfg. Co., Waterbury, Conn.
GUTHRIE, EDWARD B.....Deputy City Eng'r, Buffalo, N. Y.

HIGGINS, GEO. F.....Asst. M. E. Amoskeag Manuf. Co., Manchester, N. H.
HILDRETH, WILLIAM OSGOOD..Asst. Mech. Eng., Mass. Inst. Tech., Boston, Mass.
HOBART, JAMES C.....D'tsman and Mech. Eng., The Jas. L. Haven Co., 56 Plum St., Cincinnati, Ohio.
HOLMES, CHARLES L.....Mech. Eng. Woodworth & White Mfg. Co., Waterbury, Conn.
HUSON, WINFIELD S..Mech. D'tsman & Des. Campbell P't'g Press & Mfg. Co., and Box 365, Taunton, Mass.

JOHNSTON, EDWARD B.... .....Chief D'ftsman Frey Printing Co., 11 and 13 E. 8th St., Cincinnati, Ohio.
KIELY, H. J.....Salesman Link Belt Eng. Co., 49 Dey Street, N. Y. City.
LAIRD, John A.....Asst. Mech. Eng. W. W. Extension, 77 E. May Street, St. Louis, Mo.
LIDGERWOOD, WM. VAIL...Lidgerwood Mfg. Co., 96 Liberty Street, N. Y. City.
LIPPS, HENRY JR.....Office M. W. R. & D. R. R., Alexandria, Va.
LOWE, WILLIAM V.....Care of Parkhill Mfg. Co., Fitchburg, Mass.
LYALL, WILLIAM L.....J. & W. Lyall, 540 W. 23d St., New York City.

MARX, HENRY.....22 Huron St., Toledo, O.
MCLEOD, HOWARD D....D'tsman and Asst. Eng'r Tests, E. P. Allis & Co., and 718 Astor St., Milwaukee, Wis.

MERRIAM, HENRY P....Pneum. Dyn. Gun Co., 11 Charlton St., New York City.
MERRILL, ALLYNE LITCHFIELD....Instr. Mech. Eng'g Mass. Inst. Tech., Boston, Mass.
MILLER, EDWARD FURBER....Asst. Mech. Eng'g Mass. Inst. Tech., Boston, and 9 Franklin St., Cambridgeport, Mass.
MORAN, DANIEL E., with Poetsch-Loveysmith Freezing Co., 2 Nassau St, and 26 West 18th St., New York City.
MUMFORD, EDGAR HUIDEKOPER.....Dist. F'm'n U. P. Ry., Leavenworth, Kan.

NEFTEL, KNIGHT.....41 Liberty Street, New York City.
NORRIS, R. VAN A.....Asst. Eng. P. RR. Coal Co., Box 726, Wilkesbarre, Pa.

OWEN, EDWARD H., JR.....150 Crescent St., Waltham, Mass.

PERCIVAL, GEORGE S .....Fellow in Mech. Eng'g School of Mines, Columbia College, No. 32 W. 46th St., N. Y. City.
PLATT, JOHN.....Hydr. Eng., 2 Central Square, Cambridgeport, Mass.
POLLEDO, Y..... 1st Asst. Eng'r Cardenas & Jucaro RR., Cardenas, Cuba.

QUIMBY, WILLIAM E.....31 Oakwood Avenue, Orange, N. J.

REIST, H. G..... .Asst. Supt. F. & M. Dept. Harrisburg Car Mfg. Co., Harrisburg, Pa.
REYNOLDS, GEORGE F .....M. C. Bullock Mfg. Co., Chicago, Ill.
RIDGLEY, WM. BARRETT.....V.-P. Springfield Iron Co., Springfield, Ill.
ROWLAND, CHAS. B.....Continental Iron Works, Brooklyn, N. Y.
ROWLAND, GEO..Continental Iron Works and 329 Madison Ave., New York City.

SAMUELS, JONATHAN H.....D'ftsman Williams, White & Co., Moline, Ill.
SCHOLL, JULIAN S....F'dry and Mach'n'y Dept. Harrisburg Mfg. Co., Harrisburg, Pa.
SCHWARZ, F. H.....D'tsman Lower Pacific Mills, Lawrence, Mass.
SHEPPARD, FRANK E....Asst. Boiler Inspector and U. S. B. Insp. Service, 15 Ashland St., Dorchester, Mass.
SINCLAIR, GEO. MARSHALL....Bethlehem Iron Co., and Fountain Hill House, Bethlehem, Pa.
SMITH, ALBERT W.....Asst. Prof. Mech. Eng. Cornell University, Ithaca, N. Y.
SMITH, C. M. W.....H'd D'ftsman Ball Eng. Co., and 119 E. 18th St., Erie, Pa.
SMITH, CHARLES P...D'tsman and Designer C. B. Rogers & Co., Norwich, Conn.
STEVENS, WM. N.....Signal Dept. N. Y., L. E. & W. RR., 187 West St., and 163 St. James Place, Brooklyn.
STONE, WILBUR M.....6 Townley St., Hartford, Conn.
SUTER, GEORGE A.....Baker, Smith & Co., South Fifth Ave. and Houston St., New York City.

TAYLOR, WILLIAM M..... Asst. Supt. Phœnix Mach. Wks., 370 West Washington St., Indianapolis, Ind.
TOMPKINS, S.....Supt. Shops, University of Tenn., Knoxville, Tenn.
TORRANCE, KENNETH....Mech. Eng., 86 Liberty St., New York City, and 184 Columbia Heights, Brooklyn, N. Y.

TROWBRIDGE, FRANK C. ..... Mech. Eng. Black and Clawson Co., Hamilton, O.
TRUMP, EDWARD N. ..... Mech. Eng. Solvay Process Co., Syracuse, N. Y.

VAN DUZEE, HAROLD. ..... Link Belt Eng. Co., Nicetown, Phila., Pa.
VEEDER, CURTIS H. ..... Chf. D'tsman Mach. Dept. Calumet & Hecla M'g Co., Calumet, Mich.

WHITING, CHARLES W. ..... 2 Central Square, Cambridgeport, Mass.
WIGGIN, WM. H. ... Mech. D'ftsman with Chas. H. Morgan, 25 Lincoln St., and 161 Lincoln St., Worcester, Mass.
WILKES, J. FRANK. ..... Supt. Mecklenburg I. W., Charlotte, N. C.
WILLIAMS, HARVEY D. ... Instr. Sibley Coll., Cornell Univ., and 66 Cascadilla Place, Ithaca, N. Y.

Deceased.

HENRY R. WORTHINGTON. ..... Dec. 17, 1880.
THEODORE R. SCOWDEN. ..... Dec. 31, 1881.
ALEXANDER L. HOLLEY. ..... Jan. 29, 1882.
ERASTUS W. SMITH. ..... June 12, 1882.
PETER COOPER, Honorary Member. ..... April 4, 1883.
JAMES PARK, JR. ..... April 21, 1883.
W. K. SEAMAN. ..... July 2, 1883.
REDMOND J. BROUGH. ..... July 21, 1883.
C. W. SIEMENS, Honorary Member. ..... Nov. 20, 1883.
HENRY F. SNYDER. ..... Nov. 25, 1883.
O. HALLAUER, Honorary Member. ..... Dec. 5, 1883.
WILLIAM ATWOOD. ..... Feb. 16, 1884.
WILMER G. CARTWRIGHT. ..... Feb. 23, 1884.
THEODORE H. RISDON. ..... May 19, 1884.
ISAAC NEWTON. ..... Sept. 25, 1884.
J. H. BURNETT. ..... Jan. 31, 1885.
HORACE LORD. ..... Feb. 28, 1885.
D. H. HOTCHKISS. ..... April 29, 1885.
HENRI TRESCA, Honorary Member. ..... June 24, 1885.
HENRY H. GORRINGE. ..... July 6, 1885.
WILBUR H. JONES. ..... July 29, 1885.
FREDERIC E. BUTTERFIELD. ..... Sept. 5, 1885.
WM. CLEVELAND HICKS. ..... Oct. 19, 1885.
D. S. HINES. ..... Nov. 9, 1885.
THEODORE BERGNER. ..... Jan. 5, 1886.
EMILE F. LOISEAU. ..... April 30, 1886.
JOHN C. HOADLEY. ..... Oct. 21, 1886.
HOMER HAMILTON. ..... Nov. 29, 1886.
JOHN B. ROOT. ..... Dec. 11, 1886.
BISHOP ARNOLD. ..... Feb. 16, 1887.
B. F. EMERSON (*Associate*). ..... April 5, 1887.
WM. L. NICOLL. ..... July 2, 1887.
JACKSON BAILEY (*Associate*). ..... July 7, 1887.

James Sheriffs.....July 18, 1887.
William Wallace Hanscom.....Jan. 19, 1888.
Barnabas H. Bartol.....Feb. 10, 1888.
H. P. Gregory.....July 2, 1888.
Alfred B. Couch.....Aug. 2, 1888.
Rudolph Clausius, Honorary Member.....Aug. 24, 1888.
William Miller.....Sept. 21, 1888.
Daniel N. Jones.....Dec. 10, 1888.
Cornelius H. D'Elamater.....Feb. 7, 1889.
John Ericsson.....March 8, 1889.
Harvey F. Gaskill.....April 30, 1889.
Alex. Hamilton, Jr.....May 31, 1889.

Summary.

Honorary Members	14
Life Members	8
Members	831
Associates	46
Juniors	86
Total	985

RULES

OF THE

AMERICAN SOCIETY OF MECHANICAL ENGINEERS.

[*Adopted November 5th*, 1884.]

OBJECTS.

ART. 1. The objects of the AMERICAN SOCIETY OF MECHANICAL ENGINEERS are to promote the Arts and Sciences connected with Engineering and Mechanical Construction, by means of meetings for social intercourse and the reading and discussion of professional papers, and to circulate, by means of publication among its members, the information thus obtained.

MEMBERSHIP.

ART. 2. The Society shall consist of Members, Honorary Members, Associates and Juniors.

ART. 3. Mechanical, Civil, Military, Mining, Metallurgical and Naval Engineers and Architects may be candidates for membership in this Society.

ART. 4. To be eligible as a *Member*, the candidate must have been so connected with some of the above-specified professions as to be considered, in the opinion of the Council, competent to take charge of work in his department, either as a designer or constructor, or else he must have been connected with the same as a teacher.

ART. 5. *Honorary Members*, not exceeding twenty-five in number, may be elected. They must be persons of acknowledged professional eminence who have virtually retired from practice.

ART. 6. To be eligible as an *Associate*, the candidate must have such a knowledge of or connection with applied science as qualifies him, in the opinion of the Council, to co-operate with engineers in the advancement of professional knowledge.

ART. 7. To be eligible as a *Junior*, the candidate must have been in the practice of engineering for at least two years, or he must be a graduate of an engineering school.

The term "Junior" applies to the professional experience, and not to the age of the candidate. Juniors may become eligible to membership.

ART. 8. All Members and Associates shall be equally entitled to the privileges of membership. Honorary Members and Juniors shall not be entitled to vote nor to be members of the Council.

ELECTION OF MEMBERS.

ART. 9. Every candidate for admission to the Society, excepting candidates for honorary membership, must be proposed by at least three members, or members and associates, to whom he must be personally known, and he must be seconded by two others. The proposal must be accompanied by a statement in writing by the candidate of the grounds of his application for election, including an account of his professional experience, and an agreement that he will conform to the requirements of membership if elected.

ART. 10. All such applications and proposals must be received and acted upon by the Council at least thirty days before a regular meeting, when the Secretary shall at once mail to each member and associate, in the form of a letter ballot, the names of candidates recommended by the Council for election.

ART. 11. Any member or associate entitled to vote may erase the name of any candidate, and may, at his option, return to the Secretary such ballot enclosed in two envelopes, the inner one to be blank and the outer one endorsed by the voter.

ART. 12. The rejection of any candidate for admission as member, associate, or junior, by *seven* voters, shall defeat the election of said candidate. The rejection of any candidate for admission as honorary member by *three* voters shall defeat the election of said candidate.

ART. 13. The said blank envelopes shall be opened by the Council at any meeting thereof, and the names of the candidates elected shall be announced in the first ensuing meeting of the Society, and also in the first ensuing list of members. The names of candidates not elected shall neither be announced nor recorded in the proceedings

ART. 14.—Candidates for admission as honorary members shall

not be required to present their claims; those making the nominations shall state the grounds therefor, and shall certify that the nominee will accept if elected. The method of election in other respects shall be the same as in case of other candidates.

ART. 15. All persons elected to the Society, excepting honorary members, must subscribe to the rules and pay to the Treasurer the initiation fee before they can receive certificates of membership. If this is not done within six months of notification of election, the election shall be void.

ART. 16. The proposers of any rejected candidate may, within three months after such rejection, lay before the Council written evidence that an error was then made, and if a reconsideration is granted, another ballot shall be ordered, at which thirteen negative votes shall be required to defeat the candidate.

ART. 17. Persons desiring to change the class of their membership shall be proposed in the same form as described for a new applicant.

FEES AND DUES.

ART. 18. The initiation fees of members and associates shall be $15, and their annual dues shall be $10, payable in advance. The initiation fee of juniors shall be $10, and their annual dues $5, payable in advance. A junior, being promoted to full membership, shall pay an additional initiation fee of $5. Any member or associate may become, by the payment of $150 at any one time, a life member or associate, and shall not be liable thereafter to annual dues.

ART. 19. Any member, associate or junior, in arrears may, at the discretion of the Council, be deprived of the receipt of publications, or stricken from the list of members, when in arrears for one year. Such person may be restored to membership by the Council on payment of all arrears, or by re-election after an interval of three years.

OFFICERS.

ART. 20. The affairs of the Society shall be managed by a Council, consisting of a President, six Vice-Presidents, nine Managers, and a Treasurer, who shall be elected from among the members and associates of the Society at the annual meetings, to hold office as follows:

ART. 21. The President and the Treasurer for one year; and

no person shall be eligible for immediate re-election as President who shall have held that office for two consecutive years; the Vice-Presidents for two years, and the Managers for three years; and no Vice-President or Manager shall be eligible for immediate re-election to the same office at the expiration of the term for which he was elected.

ART. 22. A Secretary, who shall be a member of the Society, shall be appointed for one year by a majority of the members of the Council at its first meeting after the annual election, or as soon thereafter as the votes of a majority of the members of the Council can be secured for a candidate. The Secretary may be removed by a vote of twelve members of the Council, at any time after one month's notice has been given him by a majority of its members to show cause why he should not be removed, and he has been heard to that effect. The Secretary may take part in any of the deliberations of the Council, but shall not have a vote therein. His salary shall be fixed for the time he is appointed by a majority vote of the Council.

ART. 23. At each annual meeting, a President, three Vice-Presidents, three Managers and a Treasurer shall be elected, and the term of office of each shall continue until the end of the meeting at which their successors are elected.

ART. 24. The duties of all officers shall be such as usually pertain to their offices or may be delegated to them by the Council or by the Society. The Council may, in its discretion, require bonds to be given by the Treasurer.

ART. 25. The Council may, by vote of a majority of all its members, declare the place of any officer vacant, on his failure for one year, from inability or otherwise, to attend the Council meetings, or to perform the duties of his office. All such vacancies and those occurring by death or resignation shall be filled by the appointment of the Council, and any person so appointed shall hold office for the remainder of the term for which his predecessor was elected or appointed; *provided* that the said appointment shall not render him ineligible at the next annual meeting.

ART. 26. Five members of the Council shall constitute a quorum; but the Council may appoint an Executive Committee, or business may be transacted at a regularly called meeting of the Council, at which less than a quorum is present, subject to the approval of a majority of the Council, subsequently given in writing to the Secretary and recorded by him with the minutes. Absent mem-

bers of the Council may vote by proxy upon subjects stated in the call for a meeting, said proxy to be deposited with the Secretary.

ART. 27. The President on assuming office shall appoint a Finance Committee and a Publication Committee and a Library Committee of five members each. The appointment of two members of each Committee shall expire at the end of each year. The Secretary shall, *ex officio*, be a member of all three Committees.

ART. 28.—The Finance Committee shall have power to order all ordinary or current expenditures, and shall audit all bills therefor. No bill shall be paid except upon their audit. When special appropriations are ordered by the Society, they shall not take effect until they have been referred to the Council and Finance Committee in conference.

ART. 29. It shall be the duty of the Publication Committee to receive all papers contributed, to decide which shall be published in the *Transactions*, and which shall be read in full at the meetings.

ART. 30. It shall be the duty of the Library Committee to take charge of the collection of all material for the Library of the Society, and to supervise all regulations for its use.

ELECTION OF OFFICERS.

ART. 31. At the regular meeting preceding the annual meeting a nominating committee of five members, not officers of the Society, shall be appointed, and this committee shall, at least thirty days before the annual meeting, send to the Secretary the names of nominees for the offices falling vacant under the rules. In addition to such regularly appointed committee, any other five members or associates, not in arrears, may constitute an independent nominating committee, and may present to the Secretary, at least thirty days before the annual meeting, all the names of such candidates as they may select. All the names of such independent nominees shall be placed upon the ballot list with nothing to distinguish them from the nominees of the regular committee, and the Secretary shall at once mail the said list of names to each member and associate in the form of a letter ballot, it being understood that the assent of the nominees shall have been secured in all cases.

ART. 32. In the election of Vice-Presidents, each member and associate may cast as many votes as there are Vice-Presidents to be elected. He may give all these votes to one candidate, or dis-

no person shall be eligible for immediate re-election as President who shall have held that office for two consecutive years; the Vice-Presidents for two years, and the Managers for three years; and no Vice-President or Manager shall be eligible for immediate re-election to the same office at the expiration of the term for which he was elected.

ART. 22. A Secretary, who shall be a member of the Society, shall be appointed for one year by a majority of the members of the Council at its first meeting after the annual election, or as soon thereafter as the votes of a majority of the members of the Council can be secured for a candidate. The Secretary may be removed by a vote of twelve members of the Council, at any time after one month's notice has been given him by a majority of its members to show cause why he should not be removed, and he has been heard to that effect. The Secretary may take part in any of the deliberations of the Council, but shall not have a vote therein. His salary shall be fixed for the time he is appointed by a majority vote of the Council.

ART. 23. At each annual meeting, a President, three Vice-Presidents, three Managers and a Treasurer shall be elected, and the term of office of each shall continue until the end of the meeting at which their successors are elected.

ART. 24. The duties of all officers shall be such as usually pertain to their offices or may be delegated to them by the Council or by the Society. The Council may, in its discretion, require bonds to be given by the Treasurer.

ART. 25. The Council may, by vote of a majority of all its members, declare the place of any officer vacant, on his failure for one year, from inability or otherwise, to attend the Council meetings, or to perform the duties of his office. All such vacancies and those occurring by death or resignation shall be filled by the appointment of the Council, and any person so appointed shall hold office for the remainder of the term for which his predecessor was elected or appointed; *provided* that the said appointment shall not render him ineligible at the next annual meeting.

ART. 26. Five members of the Council shall constitute a quorum; but the Council may appoint an Executive Committee, or business may be transacted at a regularly called meeting of the Council, at which less than a quorum is present, subject to the approval of a majority of the Council, subsequently given in writing to the Secretary and recorded by him with the minutes. Absent mem-

bers of the Council may vote by proxy upon subjects stated in the call for a meeting, said proxy to be deposited with the Secretary.

ART. 27. The President on assuming office shall appoint a Finance Committee and a Publication Committee and a Library Committee of five members each. The appointment of two members of each Committee shall expire at the end of each year. The Secretary shall, *ex officio*, be a member of all three Committees.

ART. 28.—The Finance Committee shall have power to order all ordinary or current expenditures, and shall audit all bills therefor. No bill shall be paid except upon their audit. When special appropriations are ordered by the Society, they shall not take effect until they have been referred to the Council and Finance Committee in conference.

ART. 29. It shall be the duty of the Publication Committee to receive all papers contributed, to decide which shall be published in the *Transactions*, and which shall be read in full at the meetings.

ART. 30. It shall be the duty of the Library Committee to take charge of the collection of all material for the Library of the Society, and to supervise all regulations for its use.

ELECTION OF OFFICERS.

ART. 31. At the regular meeting preceding the annual meeting a nominating committee of five members, not officers of the Society, shall be appointed, and this committee shall, at least thirty days before the annual meeting, send to the Secretary the names of nominees for the offices falling vacant under the rules. In addition to such regularly appointed committee, any other five members or associates, not in arrears, may constitute an independent nominating committee, and may present to the Secretary, at least thirty days before the annual meeting, all the names of such candidates as they may select. All the names of such independent nominees shall be placed upon the ballot list with nothing to distinguish them from the nominees of the regular committee, and the Secretary shall at once mail the said list of names to each member and associate in the form of a letter ballot, it being understood that the assent of the nominees shall have been secured in all cases.

ART. 32. In the election of Vice-Presidents, each member and associate may cast as many votes as there are Vice-Presidents to be elected. He may give all these votes to one candidate, or dis-

no person shall be eligible for immediate re-election as President who shall have held that office for two consecutive years; the Vice-Presidents for two years, and the Managers for three years; and no Vice-President or Manager shall be eligible for immediate re-election to the same office at the expiration of the term for which he was elected.

ART. 22. A Secretary, who shall be a member of the Society, shall be appointed for one year by a majority of the members of the Council at its first meeting after the annual election, or as soon thereafter as the votes of a majority of the members of the Council can be secured for a candidate. The Secretary may be removed by a vote of twelve members of the Council, at any time after one month's notice has been given him by a majority of its members to show cause why he should not be removed, and he has been heard to that effect. The Secretary may take part in any of the deliberations of the Council, but shall not have a vote therein. His salary shall be fixed for the time he is appointed by a majority vote of the Council.

ART. 23. At each annual meeting, a President, three Vice-Presidents, three Managers and a Treasurer shall be elected, and the term of office of each shall continue until the end of the meeting at which their successors are elected.

ART. 24. The duties of all officers shall be such as usually pertain to their offices or may be delegated to them by the Council or by the Society. The Council may, in its discretion, require bonds to be given by the Treasurer.

ART. 25. The Council may, by vote of a majority of all its members, declare the place of any officer vacant, on his failure for one year, from inability or otherwise, to attend the Council meetings, or to perform the duties of his office. All such vacancies and those occurring by death or resignation shall be filled by the appointment of the Council, and any person so appointed shall hold office for the remainder of the term for which his predecessor was elected or appointed; *provided* that the said appointment shall not render him ineligible at the next annual meeting.

ART. 26. Five members of the Council shall constitute a quorum; but the Council may appoint an Executive Committee, or business may be transacted at a regularly called meeting of the Council, at which less than a quorum is present, subject to the approval of a majority of the Council, subsequently given in writing to the Secretary and recorded by him with the minutes. Absent mem-

bers of the Council may vote by proxy upon subjects stated in the call for a meeting, said proxy to be deposited with the Secretary.

ART. 27. The President on assuming office shall appoint a Finance Committee and a Publication Committee and a Library Committee of five members each. The appointment of two members of each Committee shall expire at the end of each year. The Secretary shall, *ex officio*, be a member of all three Committees.

ART. 28.—The Finance Committee shall have power to order all ordinary or current expenditures, and shall audit all bills therefor. No bill shall be paid except upon their audit. When special appropriations are ordered by the Society, they shall not take effect until they have been referred to the Council and Finance Committee in conference.

ART. 29. It shall be the duty of the Publication Committee to receive all papers contributed, to decide which shall be published in the *Transactions*, and which shall be read in full at the meetings.

ART. 30. It shall be the duty of the Library Committee to take charge of the collection of all material for the Library of the Society, and to supervise all regulations for its use.

ELECTION OF OFFICERS.

ART. 31. At the regular meeting preceding the annual meeting a nominating committee of five members, not officers of the Society, shall be appointed, and this committee shall, at least thirty days before the annual meeting, send to the Secretary the names of nominees for the offices falling vacant under the rules. In addition to such regularly appointed committee, any other five members or associates, not in arrears, may constitute an independent nominating committee, and may present to the Secretary, at least thirty days before the annual meeting, all the names of such candidates as they may select. All the names of such independent nominees shall be placed upon the ballot list with nothing to distinguish them from the nominees of the regular committee, and the Secretary shall at once mail the said list of names to each member and associate in the form of a letter ballot, it being understood that the assent of the nominees shall have been secured in all cases.

ART. 32. In the election of Vice-Presidents, each member and associate may cast as many votes as there are Vice-Presidents to be elected. He may give all these votes to one candidate, or dis-

no person shall be eligible for immediate re-election as President who shall have held that office for two consecutive years; the Vice-Presidents for two years, and the Managers for three years; and no Vice-President or Manager shall be eligible for immediate re-election to the same office at the expiration of the term for which he was elected.

ART. 22. A Secretary, who shall be a member of the Society, shall be appointed for one year by a majority of the members of the Council at its first meeting after the annual election, or as soon thereafter as the votes of a majority of the members of the Council can be secured for a candidate. The Secretary may be removed by a vote of twelve members of the Council, at any time after one month's notice has been given him by a majority of its members to show cause why he should not be removed, and he has been heard to that effect. The Secretary may take part in any of the deliberations of the Council, but shall not have a vote therein. His salary shall be fixed for the time he is appointed by a majority vote of the Council.

ART. 23. At each annual meeting, a President, three Vice-Presidents, three Managers and a Treasurer shall be elected, and the term of office of each shall continue until the end of the meeting at which their successors are elected.

ART. 24. The duties of all officers shall be such as usually pertain to their offices or may be delegated to them by the Council or by the Society. The Council may, in its discretion, require bonds to be given by the Treasurer.

ART. 25. The Council may, by vote of a majority of all its members, declare the place of any officer vacant, on his failure for one year, from inability or otherwise, to attend the Council meetings, or to perform the duties of his office. All such vacancies and those occurring by death or resignation shall be filled by the appointment of the Council, and any person so appointed shall hold office for the remainder of the term for which his predecessor was elected or appointed; *provided* that the said appointment shall not render him ineligible at the next annual meeting.

ART. 26. Five members of the Council shall constitute a quorum; but the Council may appoint an Executive Committee, or business may be transacted at a regularly called meeting of the Council, at which less than a quorum is present, subject to the approval of a majority of the Council, subsequently given in writing to the Secretary and recorded by him with the minutes. Absent mem-

bers of the Council may vote by proxy upon subjects stated in the call for a meeting, said proxy to be deposited with the Secretary.

ART. 27. The President on assuming office shall appoint a Finance Committee and a Publication Committee and a Library Committee of five members each. The appointment of two members of each Committee shall expire at the end of each year. The Secretary shall, *ex officio*, be a member of all three Committees.

ART. 28.—The Finance Committee shall have power to order all ordinary or current expenditures, and shall audit all bills therefor. No bill shall be paid except upon their audit. When special appropriations are ordered by the Society, they shall not take effect until they have been referred to the Council and Finance Committee in conference.

ART. 29. It shall be the duty of the Publication Committee to receive all papers contributed, to decide which shall be published in the *Transactions*, and which shall be read in full at the meetings.

ART. 30. It shall be the duty of the Library Committee to take charge of the collection of all material for the Library of the Society, and to supervise all regulations for its use.

ELECTION OF OFFICERS.

ART. 31. At the regular meeting preceding the annual meeting a nominating committee of five members, not officers of the Society, shall be appointed, and this committee shall, at least thirty days before the annual meeting, send to the Secretary the names of nominees for the offices falling vacant under the rules. In addition to such regularly appointed committee, any other five members or associates, not in arrears, may constitute an independent nominating committee, and may present to the Secretary, at least thirty days before the annual meeting, all the names of such candidates as they may select. All the names of such independent nominees shall be placed upon the ballot list with nothing to distinguish them from the nominees of the regular committee, and the Secretary shall at once mail the said list of names to each member and associate in the form of a letter ballot, it being understood that the assent of the nominees shall have been secured in all cases.

ART. 32. In the election of Vice-Presidents, each member and associate may cast as many votes as there are Vice-Presidents to be elected. He may give all these votes to one candidate, or dis-

FIG. PAGE
50. Diagram of Cone pulley tangents 283
51. " " " " " 286
52. " " length of open belt 287
53, 54. " " cones and steps 290
55. Counter-balancing locomotives, model for 304
56. " " wheel-weights 306
57. " " apparatus to weigh pounding 314
58. Jarvis Engine, elevation of 141
59, 60. Identification of dry steam, apparatus for 353
61. Appearance of Dry Steam at 55 lbs. G. P. 354
62. " " " " 95 " " 354
63. " " " " 55 " " 355
64. " Wet " " 55 " " 356
65. " " " " 55 " " 357
66. " " " " 95 " " 357
67. " " " " 95 " " 358
68. " Superheated steam at 95 lbs. G. P. 358
69. " Wet " " 95 " " 359
70. " Dry " 360
71. " " " 361
72. Wobbling drill for recessed holes 461
74. Flow of steam at different pressures 324
75. Apparatus for measuring friction of packing rings 393
76–79. Diagrams of friction of piston rings 394
80. Friction on inclined plane 402
81, 82. " " " " 403
83 " " " " 404
84. " " " " 405
88. Rack-cutter, Gould & Eberhardt 338
89. Piped Ingot of Steel 438
90, 91. Lip-drill for recessed holes 462
92. Diagram of action in non-expansive engine 261
93. " " indicator card in non-expansive engine 263
94. " " " " in expansive engine 260
95. " " work of injector 342
96. " " action of " 344
97. " " motion on inclined plane 406
98. Model of " " " " 408
99. Diagram of components 411
100. Model of windlass friction 414
101. Diagram of journal " 415
102, 103. " " lever actions 416
104. " " projection of model lines 417
105. Models of overhauling power 426
106. Failure of throat-sheet of locomotive 434
107. Energy of out-flowing steam 382
108. Flow of steam in tubes compared 385
109, 110. Weight of steam discharged 387
111, 112. Locomotive Sampson, long and trans. sections 512
113. " " parallel motion 512

FIG. PAGE
114. Locomotive Sampson, side view 510
115. Webber transmitting dynamometer..... 514
116. Cornish valve, narrow seat..... 522
117. " " " " 523
118. " " flat " 524
119. " " of H. S. Pumping Engine, Providence 525
120. " " " " " " section of seat..... 526
121–123. Cornish valve, diagrams of lift of..... 527
124. " " " " enlarged..... 528
125. " " of Cornish Pump, Providence, R. I..... 531
126. " " " St. Louis H. S. Pump..... 532
127. " " " Milwaukee W. W. Pump..... 533
127. " " " " " " detail..... 534
128. Pump Valve of Reynolds..... 535
128. " " " " detail..... 536
129. Specimen of Wood to observe absorption of water..... 539
130. Diagram of pressures and temperatures of ammonia..... 628
131. Indicator motion for Compound Engines.....faces 586
132. " " " " " ..... " 586
133. " " " " " detail 587
134, 135. " " " " " " 589
136. " " " " " " 588
137. " " " " " " 590
138. Piping of a Steel Ingot..... 593
140. " " " " avoided..... 594
141. " " " " " detail..... 595
142–147. Piping of a Steel Ingot, avoided, detail..... 597
148, 149. Indicator card from Triple-expansion Engine 579
150. Volume of weight of vapor 648
151. Diagram of expansion curve..... 650
152. " " weights and expansion..... 652
153. Diagram of flow of water from orifice..... 778
154. Indicator diagram, Strong Locomotive..... 688
155-157. " " " " 689
158-160. " " " " 690
154A-156A. Indicator diagram, C. R. I. & P Locomotive..... 692
157A-159A. " " " " 693
161. Worn bore of engine cylinder..... 696
162. Section of engine piston..... 697
163, 164. Worn valve stem and repair..... 700
165, 166. Indicator cards of Engine Test..... 740
167, 168. " " " " " 741
169, 170. " " " " " 742
171, 172. " " " " " 743
173, 174 " " " " " 744
175, 176. " " " " " 745
177, 178. " " " " " 746
179. " " " " " 747
180, 181. " " " " " 748
182. " " " " " 749

FIG. PAGE
50. Diagram of Cone pulley tangents 283
51. " " " " " 286
52. " " length of open belt..... 287
53, 54. " " cones and steps..... 290
55. Counter-balancing locomotives, model for..... 304
56. " " wheel-weights..... 306
57. " " apparatus to weigh pounding..... 314
58. Jarvis Engine, elevation of..... 141
59, 60. Identification of dry steam, apparatus for..... 353
61. Appearance of Dry Steam at 55 lbs. G. P..... 354
62. " " " " 95 " " 354
63. " " " " 55 " " 355
64. " Wet " " 55 " " 356
65. " " " " 55 " " 357
66. " " " " 95 " " 357
67. " " " " 95 " " 358
68. " Superheated steam at 95 lbs. G. P..... 358
69. " Wet " " 95 " " 359
70. " Dry " 360
71. " " " 361
72. Wobbling drill for recessed holes..... 461
74. Flow of steam at different pressures..... 324
75. Apparatus for measuring friction of packing rings..... 393
76–79. Diagrams of friction of piston rings..... 394
80. Friction on inclined plane..... 402
81, 82. " " " " 403
83 " " " " 404
84. " " " " 405
88. Rack-cutter, Gould & Eberhardt..... 338
89. Piped Ingot of Steel..... 438
90, 91. Lip-drill for recessed holes..... 462
92. Diagram of action in non-expansive engine 261
93. " " indicator card in non-expansive engine..... 263
94. " " " " in expansive engine..... 260
95. " " work of injector..... 342
96. " " action of " 344
97. " " motion on inclined plane..... 406
98. Model of " " " " 408
99. Diagram of components..... 411
100. Model of windlass friction 414
101. Diagram of journal " 415
102, 103. " " lever actions..... 416
104. " " projection of model lines..... 417
105. Models of overhauling power..... 426
106. Failure of throat-sheet of locomotive..... 434
107. Energy of out-flowing steam..... 382
108. Flow of steam in tubes compared..... 385
109, 110. Weight of steam discharged..... 387
111, 112. Locomotive Sampson, long and trans. sections..... 512
113. " " parallel motion..... 512

FIG. PAGE
114. Locomotive Sampson, side view 510
115. Webber transmitting dynamometer..... 514
116. Cornish valve, narrow seat..... 522
117. " " " " 523
118. " " flat " 524
119. " " of H. S. Pumping Engine, Providence 525
120. " " " " " " section of seat..... 526
121–123. Cornish valve, diagrams of lift of..... 527
124. " " " " enlarged..... 528
125. " " of Cornish Pump, Providence, R. I..... 531
126. " " " St. Louis H. S. Pump..... 532
127. " " " Milwaukee W. W. Pump..... 533
127. " " " " " " detail..... 534
128. Pump Valve of Reynolds..... 535
128. " " " " detail..... 536
129. Specimen of Wood to observe absorption of water..... 539
130. Diagram of pressures and temperatures of ammonia..... 628
131. Indicator motion for Compound Engines.....faces 586
132. " " " " " ..... " 586
133. " " " " " detail 587
134, 135. " " " " " " 589
136. " " " " " " 588
137. " " " " " " 590
138. Piping of a Steel Ingot..... 593
140. " " " " avoided..... 594
141. " " " " " detail..... 595
142–147. Piping of a Steel Ingot, avoided, detail..... 597
148, 149. Indicator card from Triple-expansion Engine 579
150. Volume of weight of vapor..... 648
151. Diagram of expansion curve..... 650
152. " " weights and expansion..... 652
153. Diagram of flow of water from orifice..... 778
154. Indicator diagram, Strong Locomotive..... 688
155–157. " " " " 689
158–160. " " " " 690
154A–156A. Indicator diagram, C. R. I. & P Locomotive..... 692
157A–159A. " " " " 693
161. Worn bore of engine cylinder..... 696
162. Section of engine piston..... 697
163, 164. Worn valve stem and repair..... 700
165, 166. Indicator cards of Engine Test..... 740
167, 168. " " " " " 741
169, 170. " " " " " 742
171, 172. " " " " " 743
173, 174 " " " " " 744
175, 176. " " " " " 745
177, 178. " " " " " 746
179. " " " " " 747
180, 181. " " " " " 748
182. " " " " " 749

LIST OF ILLUSTRATIONS.

FIG.		PAGE
183, 184.	Indicator cards of Engine Test	750
185, 186.	" " " " "	751
187, 188.	" " " " "	752
189, 190.	" " " " "	753
191.	" " " " "	754
192.	Elevation of Air Compressor used for test	723
193.	Diagram of variation of steam consumption	755
194.	" " " "	756
195–197.	Defective Indicator Cards	757
198.	Diagram of temperatures	faces 793
199.	General elevation of ice machine	" 793
200.	Theoretical Cycle in compression	796
201.	Milled channel in bolt-head	821
202.	Model to measure reaction of flow	780
203.	Diagram of moving vessel	781
204. 205.	Reaction of jets	784
206.	Diagram of driving-fit for hammer head	820
207.	" " curve of saturation	638
208.	" " isothermal curve	637
209.	Diagram of weight of steam from orifice	685
210.	" " efficiency of vapor engines	660
211.	Diagrams of curve of saturation	644

PAPERS

OF THE

SCRANTON MEETING

(XVIIIth),

BEING ALSO THE NINTH ANNUAL MEETING,

OCTOBER, 1888.

FIG. PAGE
50. Diagram of Cone pulley tangents 283
51. " " " " " 286
52. " " length of open belt..... 287
53, 54. " " cones and steps..... 290
55. Counter-balancing locomotives, model for..... 304
56. " " wheel-weights..... 306
57. " " apparatus to weigh pounding..... 314
58. Jarvis Engine, elevation of..... 141
59, 60. Identification of dry steam, apparatus for..... 353
61. Appearance of Dry Steam at 55 lbs. G. P..... 354
62. " " " " 95 " " 354
63. " " " " 55 " " 355
64. " Wet " " 55 " " 356
65. " " " " 55 " " 357
66. " " " " 95 " " 357
67. " " " " 95 " " 358
68. " Superheated steam at 95 lbs. G. P..... 358
69. " Wet " " 95 " " 359
70. " Dry " 360
71. " " " 361
72. Wobbling drill for recessed holes..... 461
74. Flow of steam at different pressures..... 324
75. Apparatus for measuring friction of packing rings..... 393
76–79. Diagrams of friction of piston rings..... 394
80. Friction on inclined plane..... 402
81, 82. " " " " 403
83 " " " " 404
84. " " " " 405
88. Rack-cutter, Gould & Eberhardt..... 338
89. Piped Ingot of Steel..... 438
90, 91. Lip-drill for recessed holes..... 462
92. Diagram of action in non-expansive engine 261
93. " " indicator card in non-expansive engine..... 263
94. " " " " in expansive engine..... 260
95. " " work of injector..... 342
96. " " action of " 344
97. " " motion on inclined plane..... 406
98. Model of " " " " 408
99. Diagram of components..... 411
100. Model of windlass friction 414
101. Diagram of journal " 415
102, 103. " " lever actions..... 416
104. " " projection of model lines..... 417
105. Models of overhauling power..... 426
106. Failure of throat-sheet of locomotive..... 434
107. Energy of out-flowing steam..... 382
108. Flow of steam in tubes compared..... 385
109, 110. Weight of steam discharged..... 387
111, 112. Locomotive Sampson, long and trans. sections..... 512
113. " " parallel motion..... 512

FIG. PAGE
114. Locomotive Sampson, side view 510
115. Webber transmitting dynamometer..... 514
116. Cornish valve, narrow seat..... 522
117. " " " " 523
118. " " flat " 524
119. " " of H. S. Pumping Engine, Providence 525
120. " " " " " " section of seat..... 526
121-123. Cornish valve, diagrams of lift of..... 527
124. " " " " enlarged..... 528
125. " " of Cornish Pump, Providence, R. I..... 531
126. " " " St. Louis H. S. Pump..... 532
127. " " " Milwaukee W. W. Pump..... 533
127. " " " " " " detail..... 534
128. Pump Valve of Reynolds..... 535
128. " " " " detail..... 536
129. Specimen of Wood to observe absorption of water..... 539
130. Diagram of pressures and temperatures of ammonia..... 628
131. Indicator motion for Compound Engines.....faces 586
132. " " " " " ..... " 586
133. " " " " " detail 587
134, 135. " " " " " " 589
136. " " " " " " 588
137. " " " " " " 590
138. Piping of a Steel Ingot..... 593
140. " " " " avoided..... 594
141. " " " " " detail..... 595
142-147. Piping of a Steel Ingot, avoided, detail..... 597
148, 149. Indicator card from Triple-expansion Engine 579
150. Volume of weight of vapor..... 648
151. Diagram of expansion curve..... 650
152. " " weights and expansion..... 652
153. Diagram of flow of water from orifice..... 778
154. Indicator diagram, Strong Locomotive..... 688
155-157. " " " " 689
158-160. " " " " 690
154A-156A. Indicator diagram, C. R. I. & P Locomotive..... 692
157A-159A. " " " " 693
161. Worn bore of engine cylinder..... 696
162. Section of engine piston..... 697
163, 164. Worn valve stem and repair..... 700
165, 166. Indicator cards of Engine Test..... 740
167, 168. " " " " " 741
169, 170. " " " " " 742
171, 172. " " " " " 743
173, 174 " " " " " 744
175, 176. " " " " " 745
177, 178. " " " " " 746
179. " " " " " 747
180, 181. " " " " " 748
182. " " " " " 749

LIST OF ILLUSTRATIONS.

FIG.		PAGE
183, 184.	Indicator cards of Engine Test	750
185, 186.	" " " " "	751
187, 188.	" " " " "	752
189, 190.	" " " " "	753
191.	" " " " "	754
192.	Elevation of Air Compressor used for test	723
193.	Diagram of variation of steam consumption	755
194.	" " " "	756
195–197.	Defective Indicator Cards	757
198.	Diagram of temperatures	faces 793
199.	General elevation of ice machine	" 793
200.	Theoretical Cycle in compression	796
201.	Milled channel in bolt-head	821
202.	Model to measure reaction of flow	780
203.	Diagram of moving vessel	781
204. 205.	Reaction of jets	784
206.	Diagram of driving-fit for hammer head	820
207.	" " curve of saturation	638
208.	" " isothermal curve	637
209.	Diagram of weight of steam from orifice	685
210.	" " efficiency of vapor engines	660
211.	Diagrams of curve of saturation	644

PAPERS

OF THE

SCRANTON MEETING

(XVIIIth),

BEING ALSO THE NINTH ANNUAL MEETING,

OCTOBER, 1888.

PROCEEDINGS

OF THE

SCRANTON MEETING

OF THE

AMERICAN SOCIETY OF MECHANICAL ENGINEERS.

October 15th to 19th, 1888.

LOCAL COMMITTEE OF ARRANGEMENTS :—W. F. MATTES, *Chairman;* W. B. Pearson, Henry Webber, E. S. Moffatt, E. K. Sancton, Sidney Broadbent, J. W. Sargent.

THE opening session of the XVIIIth meeting (also the Ninth Annual Meeting) was called to order in the Hall of the Y. M. C. A. of Scranton, at 8 o'clock, on the evening of Monday, October 15th, 1888. Col. J. A. Price, President of the Board of Trade of Scranton, gave an address of welcome, which was responded to briefly by the Acting President, Mr. C. J. H. Woodbury of Boston. The President of the Society, Mr. Horace See, was detained at home by illness, and during the entire convention his place was supplied by Mr. Woodbury, vice-president of the Society.

The Secretary's register showed the following members in attendance during the meeting:

Alden, Geo. I. ..... Worcester, Mass.
Ashworth, Daniel ..... Pittsburgh, Pa.
Babcock, Geo. H. ..... New York City.
Baldwin, Stephen W. ..... New York City.
Barr, Wm. M. ..... Philadelphia, Pa.
Barrus, Geo. H. ..... Boston, Mass.
Beach, Chas S. ..... Bennington, Vt.
Binsse, Henry Leon ..... Newark, N. J.
Bond, Geo. M. ..... Hartford, Conn.
Borden, Thos. J ..... Fall River, Mass.
Boyd, John T. ..... Philadelphia, Pa.
Broadbent, Sidney ..... Scranton, Pa.

Cavanagh, Joseph.....Philadelphia, Pa.
Chapman, Luke.....Collinsville, Conn.
Christensen, August C.....New York City.
Clark, Samuel J.....New York City.
Coleman, Isaiah B.....Elmira, N. Y.
Cooper, John H.....Philadelphia, Pa.
Crane, Thomas S.....Newark, N. J.
Crane, Wm. E.....Waterbury, Conn.
Cullingworth, Geo. R.....New York City.
Dallett, W. P.....Philadelphia, Pa.
Denton, James E.....Hoboken, N. J.
Dock, Herman.....Philadelphia, Pa.
Durfee, W. F.....Birdsboro, Pa.
Emery, Chas. E.....New York City.
Engel, Louis G.....Brooklyn, N. Y.
Ewer, Roland G.....Brooklyn, N. Y.
Firmstone, Frank.....Easton, Pa.
Fladd, Fred'k C.....New York City.
Freeman, John R.....Boston, Mass.
Geer, James H.....Johnstown, Pa.
Gilkerson, J. A.....Homer, N. Y.
Gould, W. V.....Norwich, Conn.
Green, Howell.....Jeanesville, Pa.
Hall, Albert F.....Boston, Mass.
Hammett, Hiram G.....Troy, N. Y.
Hand, Frank L.....Philadelphia, Pa.
Hand, S. Ashton.....Toughkenamon, Pa.
Haskins, Harry S.....Philadelphia, Pa.
Hobart, Jas. C.....Cincinnati, O.
Hollingsworth, Sumner.....Boston, Mass.
Holloway, J. F.....New York City.
Hunt, Chas. W.....New York City.
Hunt Robert.....Chicago, Ill.
Hutton, F. R. (*Secretary*).....New York City.
Jenkins, W. R.....Bellefonte, Pa.
Jones, Willis C.....Cincinnati, Ohio.
Laforge, F. H.....Waterbury, Conn.
Lambert, W. C.....New Haven, Conn.
Lyne, Lewis F.....Jersey City, N. J.
McRae, John D.....Baldwinsville, N. Y.
Main, Chas. T.....Lawrence, Mass.
Mansfield, A. K.....Salem, Ohio.
Mattes, W. F.....Scranton, Pa.
Meyer, J. G. A.....Paterson, N. J.
Moffatt, E. S.....Scranton, Pa.
Morgan, Thos. R., Sr.....Alliance, O.
Morgan, T. R., Jr.....Alliance, O.
Morris, Henry G.....Philadelphia, Pa.
Morse, Chas. M.....Buffalo, N. Y.
Norris, R. Van A.....Wilkesbarre, Pa.
Odell, Wm. H.....Yonkers, N. Y.

Parks, E. H ..... Providence, R. I.
Parsons, H. de B..... New York City.
Passel, Geo. W..... Cincinnati, O.
Payne, David W ..... Elmira, N. Y.
Peabody, Cecil H ..... Boston, Mass.
Pearson, Wm. A., Jr..... Scranton, Pa.
Pickering, Thos. R..... Portland, Conn.
Richards, F. H..... Hartford, Conn.
Ridgway, J. T..... Trenton, N. J.
Robertson, R. A., Jr..... Providence, R. I.
Robinson, J. M ..... New York City.
Rogers, W. S..... Cincinnati, O.
Sancton, E. K ..... Scranton, Pa.
Sargent, Jno. W..... Scranton, Pa.
Schuhmann, Geo..... Reading, Pa.
Schwamb, Peter ..... Boston, Mass.
Sinclair, Geo. M ..... Philadelphia, Pa.
Smith, Chas. P ..... Norwich, Conn.
Smith, Oberlin..... Bridgeton, N. J.
Smith, Scott A..... Providence, R. I.
Snell, Henry I..... Philadelphia, Pa.
Spies, Albert ..... New York City.
Stevenson, Archy A..... Lewiston, Pa.
Strong, Geo. S..... New York City.
Sunstrom, Karl J ..... Worcester, Mass.
Suplee, H. H ..... Philadelphia, Pa.
Svenson, John..... Scranton, Pa.
Swasey, Ambrose..... Cleveland, O.
Sweet, John E ..... Syracuse, N. Y.
Tabor, Harris..... New York City.
Thurston, R. H ..... Ithaca, N. Y.
Tompkins, S..... Crozet, Va.
Trautwein, A. P ..... Brooklyn, N. Y.
Trump, Chas. N ..... Wilmington, Del.
Trump, E. N ..... Syracuse, N. Y.
Uehling, E. H..... Bethlehem, Pa.
Warren, B. H..... Boston, Mass.
Warren, Jno. E ..... Cumberland Mills, Me.
Watson, Wm..... Boston, Mass.
Watts, Geo. W ..... Philadelphia, Pa.
Webb, J. Burkitt ..... Hoboken, N. J.
Webber, Henry, Jr..... Scranton, Pa.
Webster, John H ..... Boston, Mass.
Weeks, Geo. W ..... Clinton, Mass.
Weightman, Wm. H..... New York City.
Wellman, Sam'l T ..... Cleveland, O.
Wheelock, Jerome ..... Worcester, Mass.
Whitehead, Geo. E ..... Providence, R. I.
Whitham, Jay M..... Fayetteville, Ark.
Whitney, Baxter D ..... Winchendon, Mass.
Whitney, Wm. M..... Winchendon, Mass.

Wiley, Wm. H. ..... New York City.
Williams, Sam'l T ..... Philadelphia, Pa.
Williamson, Wm. C. ..... Philadelphia, Pa.
Wood, De Volson ..... Hoboken, N. J.
Wood, Walter ..... Philadelphia, Pa.
Woodbury, C. J. H. (*Acting President*) ..... Boston, Mass.
Woolson, O. C. ..... Newark, N. J.
Worthington, Chas. C ..... New York City.
Wyman, Horace W. ..... Worcester, Mass.
Yost, Thomas M ..... Middletown, Pa.

There were also several guests and a number of ladies in attendance.

At the close of the opening addresses the two papers of Prof. R. H. Thurston of Ithaca, were presented and discussed: "On the Distribution of Internal Friction of Engines" and "On Variable Load, Internal Friction and Engine Speed and Work." These were presented together and received discussion by Messrs. Denton, Tabor, Woodbury, Schuhmann, Durfee, Crane, Mattes and Holloway.

The paper by Prof. Jas. E. Denton, entitled "On the Friction of Piston Packing Rings in Steam Cylinders" was so closely related to the foregoing two that by general consent it was presented before the debate on those of Prof. Thurston was closed, and Messrs. Schuhmann, Thomas S. Crane, Mattes and W. E. Crane, spoke upon it.

Second Session, Tuesday, October 16th.

The session was called to order at 10 A.M. in the Hall of the Y. M. C. A. by Vice-President Woodbury. The first business was the

REPORT OF THE COUNCIL.

The Council would present its Annual Report under the Rules.

It has held seven meetings during the year, and the following is a summary of its action besides the usual routine labor in scrutinizing applications for membership and its other assigned duties. It has been directed that hereafter the annual catalogue of the Society contain the names of those whose membership has ceased during the year by resignation, by limitation or by other ways. It was decided that the membership badge and the convention badges in the junior grade be different from those worn by the members, and a design for such badge has been approved. The question of securing a house for the headquarters

of the Society in the upper part of New York City has been discussed, and arrangements were begun to occupy, jointly with the American Institute of Electrical Engineers, the historic mansion of S. F. B. Morse, at Nos. 3 and 5 West Twenty-second Street. The later negotiations miscarried, but the idea of a home for the Society has not been dropped.

Informal discussion has been held upon a project to have this Society join with the Mechanical Engineers of Great Britain, and the Iron and Steel Institute, in the meetings which those Societies are to hold in London and Paris in the summer of 1889. The following invitation has been received from Mr. E. N. Carbutt, President of the Institution of Mechanical Engineers of Great Britain, and a rough draft is in hand of a projected programme of such a visit:

October 6th, 1888.

THE PRESIDENT OF THE AMERICAN SOCIETY OF MECHANICAL ENGINEERS.

DEAR SIR:

I am authorized to invite your Society to hold a week's meeting in London next year some time in May. We were given to understand that many of the leading American Engineers would visit Europe to see the Paris Exhibition of 1889. If your Society should accept the invitation it would be warmly welcomed by the Institution of Civil Engineers, the Iron and Steel Institute and my own Society, viz.: The Institution of Mechanical Engineers of England, and others.

Your treasurer, Mr. Wiley, will more fully explain to you our desire to welcome our brother Engineers of America.

* * * * * * * *

I remain, Dear Sir, Yours Faithfully,

E. N. CARBUTT,
President Institute Mech. Eng'rs.

The scheme is under advisement at the date of this report, and Messrs. Wiley and Hutton, the Treasurer and Secretary of the Society, are appointed a committee to make inquiries and get the views of the members as to accepting this invitation. The Council have accepted a most cordial invitation to hold the Spring Convention of 1889 in the City of Erie, Pa.

The losses by death since the last report in Volume IX. have been as follows:

Wm. Wallace Hanscom	Member.
Barnabas H. Bartol	"
H. P. Gregory	"
Alfred B. Couch	"
Wm. Miller	"
Rudolf Clausius	Honorary Member.

The total membership in the Society at this time is distributed among the grades as follows:

Members	772
Associates	36
Juniors	54
Add to this those reported below as joining at this time:	
Members	30
Associates	4
Juniors	7
Grand Total	903

The Council would also present the report of its Tellers as follows:

The undersigned were appointed a Committee of the Council to act as tellers under Rule 13, to count and scrutinize the ballots cast for and against the candidates proposed for membership in the Society of Mechanical Engineers, and seeking election before the XVIIIth meeting of the Society in October, 1888.

They would report that they have met upon the designated days in the office of the Secretary and proceeded to the discharge of their duties.

They would certify for formal insertion in the records of the Society to the election of the appended named persons, to their respective grades, upon Lists Nos. 1 and 2, respectively, pink and yellow.

There were 374 votes cast in the ballot upon the pink list, of which 8 were thrown out because of informalities.

There were 368 votes cast upon the yellow ballot, of which 12 were thrown out because of informalities.

The lists are appended below.

WM. KENT,
STEPHEN. W. BALDWIN, } *Tellers.*

AS MEMBERS.

Babbitt, Geo. R	Providence, R. I.
Balsinger, C	Chicago, Ill.
Barnes, David L	Chicago, Ill.
Barratt, Edgar G	Chicago, Ill
Bartlett, Geo. B	Chicago, Ill.
Clay, John R	Dayton, O.
Cornelius, Henry R	Philadelphia, Pa.
Cramp, Edwin S	Philadelphia, Pa.
Dallett, W. P	Philadelphia, Pa.

Drewett, Wm. A.... .....Brooklyn, N. Y.
Fickinger, P. J .....Beaver Falls, Pa.
Fowler, Percival.....London, England.
Gregg, John..... .....Chicago, Ill.
Hand, Frank L ....Philadelphia, Pa.
Holly, Frank W.....Lockport, N. Y.
Holmboe, L. C. B .....Chicago, Ill.
Kirk, W. A. L.....Chattanooga, Tenn.
Manchester, Alfred E .....Newburgh, N. Y.
Nicholson, David K.....Steelton, Pa.
Passel, Geo. W..... .....Cincinnati, O.
Pierce, Norman M .....Nashville, Tenn.
Porter, O. S .....Covington, Ga.
Robb, David W.....Amherst, Nova Scotia.
Schwanhausser, Wm ....Brooklyn, N. Y.
Spangler, H. W.... ....Philadelphia, Pa.
Sowter, Isaac G.....Detroit, Mich.
Svenson, John.....Scranton, Pa.
White, Wm., Jr.....Pittsburgh, Pa.
Wilkin, W. M .....Erie, Pa.
Worcester, Franklin E.....Marquette, Mich.

PROMOTION FROM JUNIOR TO FULL MEMBERSHIP.

Moore, W. J. P.....London, England.

AS ASSOCIATES.

Burnham, Wm.....Philadelphia, Pa.
Hallock, John K .....Erie, Pa.
McFarren, S. J ....McKeesport, Pa.
Selden, George .....Erie, Pa.

AS JUNIORS.

Lipps, Henry, Jr.....New York City.
McLeod, Howard D .....Milwaukee, Wis.
Merrill, A. S.....Boston, Mass.
Miller, Edward F.....Boston, Mass.
Polledo, Y .....Cuba.
Schwarz, F. H.....Lawrence, Mass.
Smith, Chas. P .....Norwich, Conn.

The report of the Finance Committee to the Council at its final meeting was read, giving the summary of their work during the fiscal year just closed.

This report was as follows:

The Finance Committee would respectfully report to the Council the following statement of the receipts and expenditures of the Society under their direction for the eleven months ending October 1, 1888.

The receipts have been as follows:

Initiation Fees	$1,475 00
Current Dues	7,243 00
Past Dues	325 55
Advance Dues	74 52
Paper Sales	502 11
Binding	373 05
Library Permanent Fund	301 36
Library Current Fund	301 00
Badges	366 18
Engraving	82 70
Profit and Loss	47
Ordinary Receipts	$11,044 94
Balance in Treasurer's hands November 1, 1887	45 55
Balance in Savings Banks November 1, 1887	1,112 31
Interest for 1887-88	51 77
	$12,254 57

The expenditures have been as follows:

General Printing and Stationery	$813 73
Postage	378 10
Office Expenses	206 99
Library Permanent Fund	125 00
Rent	687 50
Salaries	2,658 27
Engraving	1,003 92
Meetings	941 03
Office Furniture and Fixtures	80 24
Badges	400 50
Traveling	171 90
Printing Transactions and Pamphlets	2,739 33
Total Expenditures for year	$10,279 26
In Savings Banks October 1, 1888	1,583 44
Balance in Treasurer's hands October 1, 1888	391 87
	$12,254 57

It will be observed that $325.55 of past dues was paid n during the year of the $573.69, reported at the last annual meeting as collectable. The dues of seventy members are unpaid at the time of preparing this report (October 10, 1888), amounting to n787.00, probably collectable in nearly all cases.

Respectfully submitted

By the Finance Committee.

The Library Committee's Report was also presented to the Society as follows:

The Library Committee would present its Fourth Annual Report of the continued success of the plans outlined in the original report found on page 11 of Volume VI. of the Transactions. Circulars were again sent out in the beginning of the year to the members who had not already subscribed, explanatory of the scheme, with a form of agreement requesting contributions in any of the three following forms:

(*a*) Subscription to a Permanent Fund in payments of $10 or upwards (payable in instalments if preferred).

To this there have been responses since the last report from three members:

John Holland	$10
W. R. Jones	5
John Thomas	10
	$25

(*b*) Annual subscriptions to an amount of two dollars to a fund for current Library expenses, payable as an increase to the dues, and at the same time.

To this there have been responses since the last report above referred to from 29 members:

Morgan Brooks.	Frank M. Leavitt.	Jas. Spiers.
H. V. Conrad.	J. F. Lewis.	Stevenson Taylor.
W. E. Crane.	W. J. Logan.	Edgar B. Thompson.
Geo. R. Cullingworth.	Wm. L. Lyall.	John Thomson.
Henry J. Davison.	Henry Metcalfe.	Jno. E. Warren.
Jas. E. Denton.	Louis Mohr.	J. H. Webster.
Geo. E. Dixon.	A. A. Noye.	J. Leland Wells.
C. Seymour Dutton.	Chas. W. Pusey.	Moses G. Wilder.
W. M. Folger.	J. M. Robinson.	Herman Winter.
W. T. Henry.	Sidney L. Smith.	

There are, therefore, 161 members now regularly contributing to this fund by this plan of a small increase in the dues, and it is urged that others should also co-operate in the further extension of this plan, and thus induce a more widespread interest in the Library among the members.

The total available annual income from this fund is $328.

(*c*) Direct contribution of books and papers of value. To this there have been a number of responses during the year by members residing abroad and in this country.

The following list contains the contributions not catalogued in the previous report:

By Jos. Morgan, Jr.:
Set of Pamphlet Reports of Board on Fortifications and Defense.

By V. Dvelshauvers-Dery (pamphlet): Rapport du Comite de L'Industrie.
Method Nouvelle, L'Exchange du Chaleur, entre Le Metal et La Vapeur.
On Steam Engine Governors.

By W. F. Guttermuth (pamphlet):
Sonderabdruck aus der Zeitschrift des vereins deutscher Ingenieure.

By Benjamin S. Church:
Report of Aqueduct Commission, N. Y, 1883–1887.

By John Wiley's Sons:
Manual of Steam Boilers (Thurston).
Tables of Saturated Steam (Peabody).

By Thomas Shanks & Sons:
Set of Photographs of shops and tools of their manufacture.

By Johann Bauschinger:
Mittheilungen aus der Mechanisch Technischen Laboratorium der Königlichen Technischen Hochschule in Munich.

By A. Martens:
Mittheilungen aus den Königlichen technischen Versuchsanstalten zu Berlin, fifth and sixth years, together with special papers on lubricants, wire, etc.

By Gustav Hermann:
Turbinen and Kreisel pumpen.
The Graphic Treatment in Thermo Dynamics.
" " Investigation of Centrifugal Governors.

By John H. Cooper:
A Treatise on the use of belting. New edition. Enlarged.

By Anon:
Bulletin of the N. Y. State Museum of Natural History.
Building stone in N. Y. State.

By R. Muckle, Jr.:
Underground Conduits for Electrical Conductors.

By Learned Soc. of Phila.:
Ceremonies—Commemorating Signing of the U. S. Constitution.

By John Birkinbine:
Water Power of the St. Louis River.

By F. E. Galloupe:
The Meig's Elevated Ry. System.

By N. E. Coast Inst. of Engineers and Shipbuilders:
Report of the Council on the H. P. of Marine Engines.

The Society has also acquired by exchange, as follows:

With D. Van Nostrand:

Count de Pambour's Practical Treatise on the Loco. Engine and Theory of the Steam Engines.
Kirkaldy's Experiments on Wrought Iron and Steel.
Farey on the Steam Engine.
Bourne, Examples of Steam, Air and Gas Engines.

With U. S. Bureau of Naval Intelligence:

Report on European Dock Yards.
" " British Naval Operations in Egypt, 1882.
Recent Naval Progress, June, 1887.
Naval Reserves, Training and Material.
Engines, Boilers and Torpedo Boats.
Maritime Canal at Suez.
Coaling, Docking, and Repairing Facilities of the Ports of the World.
Examples, Conclusions, and Maxims of Modern Naval Tactics.
Operations of the French Navy during the recent War with Tunis.
The War between Chili, Peru, and Bolivia.
Ships of War, 1885.
Our New Cruisers, 1883.

Moreover, since the previous report the Society has acquired by purchase:

The Artizan, London, Vols. 1-25, 1843-67.
The Civil Engineer and Architects' Journal, London, Vols. 1-16, 1837-53.
The Practical Mechanics' Journal, Glasgow, old series, 1848-65.
The Practical Mechanics & Engineers' Journal, Glasgow, Vol. 4, new series, 1845-47.
The Practical Mechanics & Engineers' Journal, Glasgow, second series, Vols. 1, 2, 3. 4, 1846-47.
F. E. Galloupe, Engineering Index of Periodicals.
The Engineer, London, Vol. 1, 1856, to Vol. 35, 1873.

The Society's series begins again with Vol. 58, 1884, and the Committee will be glad to secure those which are lacking to make the set complete.

Of London Engineering also we lack only Vols. 1-2 to make the set complete from the beginning.

The Library Committee would also make official mention and acknowledgment of the gift to its fund of the sum of $206.36 from the Local Committee of Arrangements for the Philadelphia meeting of the Society in 1887. This sum was part of what remained over from the subscriptions collected for the expenses of entertainment at that meeting, and the subscribers voted that this amoun should be given to the Society for some permanent purpose.

The following is a brief *résumé* of the finances of the Library Fund:

Subscribed 1884–85 (Report of Vol. VII., p. 13)	$613 40
" 1885–86 (" " VIII., p. 13)	65 00
" 1886–87 (" " IX., p. 12)	155 00
" 1887–88	25 00
Total	$858 40
Add interest and gifts	307 14
	$1,165 54
Still due on instalments unpaid	100 00
	$1,065 54

There has been actually paid in as cash to the Library Permanent Fund and reported in previous reports of the Treasurer and Finance Committee:

For the year 1884–85		$408 40
" " " 1885–86		110 00
" " " 1886–87		145 00
" " " 1887–88		95 00
Interest 1885–86	$15 43	
" 1886–87	33 58	
" 1887–88	51 77	
Total interest to July 1, 1888		100 78
Gift of Philadelphia Committee		206 36
		$1,065 54

To the fund for current expenses the payments have been as follows:

For the year 1884–85	$164 00
" " " 1885–86	254 60
" " " 1886–87	266 52
" " " 1887–88	301 00
Interest	16 30
Total current Expense Fund	$1,002 42
Total Permanent Fund	1,065 54
Grand total	$2,067 96
The sums which were not to be immediately expended were put in savings banks by order of the Committee, and have been there accumulating interest, as the above memorandum indicates.	
The disbursements on account of the Library Funds for the purchase of books and binding, of exchanges and periodicals, has amounted at date to	493 27
Leaving a balance of	$1,574 69
Advanced from the general fund for this year, to avoid drawing on savings bank for a short period	8 75
So that in the savings banks are as per the Report of the Finance Committee given elsewhere.	$1,583 44

The Library Committee would also report that a provision in the will of our deceased member, Mr. Alfred B. Couch, of Philadelphia, has given to the Society the entire mechanical and engineering library which he had collected during his lifetime. The Committee desires to put on record its appreciation of the gift and of the thought which prompted it, and to give public expression of their appreciation in this way.

Mr. Couch's testamentary bequest reads as follows:

"I wish that all my books and works on mechanical and engineering subjects (except those in manuscript or scrap-book form) be suitably packed and delivered to the American Society of Mechanical Engineers, at their office in New York City free of expense to said society, with a memorandum to the effect that many of them are nearly or quite worthless, but that I hope some may be selected from them which may be of service to the members of said society."

The following list embraces the books which have been received from Mrs. Couch in carrying out the provisions of Mr. Couch's will.

JOURNALS.

The Technologist. Vol. 1, 1870.
The R. R. & Eng. Journal. Vol. 61, 1877.

PAMPHLETS.

F. R. Hutton, Report Mach. Tools and Wood Wkg. Mchy.
Winton & Millar. Modern Steam Practice & Eng., 20 pts. complete.
Am. Ry. M. M. Ass'n. Report, 1885.
U. S. Naval Inst. Proceedings, 1887. Steel Guns.
Pressure recording Instruments. I. B. Edson.

HAND BOOKS.

Trautwien's Eng. Pocket Book, 1887.
Haswell's Mech. & Eng. Pocket Book, 1885.
Byrne's Pocket Companion, 1851.
Nystrom's Mechanics, 1865.

VAN NOSTRAND'S SERIES.

Abbott's Testing Machs.
Pettitt. Graphic Processes.
Stahl Wire Ropes.
Zahner. Compressed Air.
Allan. Strength of Beams.
Bender. Bridge Pins.
Kent. Strength of Materials.
De Roos. Linkages.
Kennedy. Kinematics.

FOUNDRY PRACTICE.

N. E. Spretson. Practical Treatise on Casting and Founding.
Edward Kirk. Founding of Metals.
T. D. West. American Foundry Practice.

STEAM ENGINE PRACTICE.

W. S. Auchincloss. Link and Valve Motions.
John Bourne. Catechism of the Steam Engine.
Hugo Bilgram. Slide Valve Gears.
Robert Grimshaw. Pump Catechism.
F. W. Bacon. Richards' Steam Engine Indicator.
Joseph Harrison. Essay on the Steam Boiler.
R. H. Thurston. Growth of the Steam Engine.
W. J. Baldwin. Steam Heating for Buildings.

MACHINE DESIGN.

W. C. Unwin. Elements of Machine design.
H. T. Brown. 507 Mechanical Movements.
Wm. Fairbairn. Mechanism and Machinery of Transmission.
C. W. MacCord. Kinematics.
J. Richards. Construction and operation Wood Wkg. Machine.
J. H. Cooper. Use of belting, 1878.
J. H. Cooper. Belting facts and figures, 1863.
Brown & Sharpe. Practical Treatise on Gearing.
Brown & Sharpe. Practical Treatise on Grinding Machines.
C. J. Appleby. Illustrated Hand Book Hoisting Machinery.
C. J. Appleby. Illustrated Hand Book Pumping Machinery.
C. J. Appleby. Illustrated Hand Book Prime Movers.
Towne, H. R. Treatise on Cranes.
C. W. MacCord. Teeth of Spur Wheels.
M. Camus. Treatise on the Teeth of Wheels.
Geo. B. Grant. Hand Book on Teeth of Gears.
Goodeve & Shelley. The Whitworth Measuring Machine.
Fred'k Collier. Hydr. Lifting and Pressing Machinery.

STRENGTH OF MATERIALS.

James B. Francis. Strength of Cast-iron Pillars.
J. K. Whildin. Strength of Materials.
John Anderson. Strength of Materials and Structures.
Edmund Olander. New Method of Graphic Statics, and Girder Construction.

MISCELLANEOUS.

Extracts from Chordal's Letters.
R. S. Ball. Experimental Mechanics.
R. H. Thurston. Materials of Eng., Part 2.
D. K. Clark. Manual of Rules, Tables and Data.
Appleton's Dictionary of Mechanics. Vol. I., A to G, 1865.
Transactions. A. S. M. E. Vols. 1–8.

The following is the list of Exchanges which are continuously on file in the Library.

SOCIETIES, AMERICAN.

American Society of Civil Engineers, New York City.
American Institute of Mining Engineers, New York City.
Associated Engineering Societies, St. Louis, Mo.
Boston Society Civil Engineers, Boston, Mass.
Canadian Society Civil Engineers, Montreal, Canada.
Civil Engineers' Association of Kansas, Wichita, Kan.
Engineers' Club of Kansas City, Kansas City, Mo.
Engineers' Society of Western Penna., Pittsburgh, Pa.
Engineers' Club of Phila., Phila, Pa.
Franklin Institute, Phila., Pa.
Indiana Society Civil Engineers and Surveyors, Remington, Ind.
Master Car Builders' Association, New York City.
U. S. Naval Institute, Annapolis, Md.

SOCIETIES, FOREIGN.

Iron and Steel Institute, London, England.
Institute Engineers and Shipbuilders of Scotland, Glasgow, Scotland.
Institution Civil Engineers of Great Britain, London, England.
Institution Mechanical Engineers of Great Britain, London, England.
Institution Civil Engineers of Ireland, Dublin, Ireland.
Ingenoirs Forenginens Forhandlinger, Stockholm, Sweden.
Liverpool Engineering Society, Liverpool, England.
Mining Institution of Scotland, Hamilton, Scotland.
N. E. Coast Inst. Eng. and Shipbuilders, Newcastle-on-Tyne, England.
North of Eng. Inst. of Mining and Mech. Eng., Newcastle-on-Tyne, Eng
Polytechnic Society of Norway, Kristiana, Norway.
Société des Ingenieurs Civiles France, Paris, France.

JOURNALS, AMERICAN.

American Machinist, New York City.
American Engineer, Chicago, Ill.
American Journal of Railway Appliances, New York City.
American Miller, Chicago, Ill.
Boston Journal of Commerce, Boston, Mass.
Chicago Journal of Commerce, Chicago, Ill.
Engineering News, New York City.
Engineering and Mining Journal, New York City.
Electrical Review, New York City.
Fire and Water, New York City.
Industrial World, Chicago, Ill.
Mechanics, Philadelphia, Pa.
Manufacturers' Gazette, Boston, Mass.
National Car Builder, New York City.
Power, New York City.
R.R. and Engineering Journal, New York City.
Railway News, New York City.
R.R. Gazette, New York City.
Stevens Indicator, Hoboken, N. J.
The Locomotive, Hartford, Conn.
The Locomotive Engineer, New York City.

JOURNALS, FOREIGN.

Architektu' a' Inzenyru', Prague, Bohemia.
Engineering, London, England.
Engineer, The London, England.
Electric Review, London, England.
Giornal del Genio Civile, Rome, Italy.
Glaser's Annalen, Berlin, Germany.
Indian Engineering, Calcutta, E. I.
Iron, London, England.
Industries, London and Manchester, England.
L'Industria, Milan, Italy.
Practical Engineer, Manchester, England.
Proceedings Royal Tech. Mech. Laboratory of Instr., Manchester, Eng.

The Transactions of the Society may also be found in the following institutions, to whose libraries they are regularly sent either as donations or in return for certain publications issued by them:

Stevens Inst. Tech., Hoboken, N. J.
Fisk University, Nashville, Tenn.
Vanderbilt University, Nashville, Tenn.
Royal Technical Institution of Research, Charlottenburg, Germany.
The Yorkshire College, Leeds, England.
Arkansas Industrial University, Fayetteville, Ark.
Bureau of Naval Intelligence, U. S. N., Washington, D. C.
Ohio State University, Columbus, Ohio.
American Institute, New York city.
Rensselaer Polytechnic Institute, Troy, N. Y.
Sibley College, Cornell University, Ithaca, N. Y.
University Library, Cornell University, Ithaca, N. Y.
University of Illinois, Champaign, Ill.
U. S. Naval Observatory, Washington, D. C.
U. S. Patent Office, Scientific Library, Washington, D. C.
U. S. Patent Office Library, London, England.
Massachusetts Inst. of Technology, Boston, Mass.
(Society of Arts.)
Conservatoire des Arts et Metiers, Paris, France.
Free Public Library, Worcester, Mass.
Purdue University, Lafayette, Ind.
University College, London.
University of Michigan, Ann Arbor, Mich.
Columbia College Library, New York city.
Lehigh University, Bethlehem, Pa.
McGill University, Montreal, Can.
Iowa Agricultural College, Ames, Iowa.

The Report of the Committee on Securing Uniformity of Test and in Test Specimens was submitted by its Chairman as follows:

Mr. H. R. Towne.—In the continued absence in Europe of Mr.

G. C. Henning, the Secretary of our Committee, in whose hands are all the details and results of the Committee's labors so far, I can only report progress, and ask that the Committee be continued. Mr. Henning will probably return in December, after which I hope he will take up the work and carry it to completion.

The Committee of the Society on Uniformity in Flanges for Valves, etc., and the Committee upon a Standard for Conducting Duty Trials of Pumping Engines reported progress and were continued.

The report of the tellers to count the ballots cast for officers for the ensuing year was presented as follows:

There were 422 ballots cast.

For President	Henry R. Towne received	418—	scattering	2
" Vice-Presidents	William Kent received	420—	"	2
" "	Thomas J. Borden received	411—	"	1
" "	Charles B. Richards received	424—	"	1
" Treasurer	William H. Wiley received	421		
" Managers	Frank H. Ball received	413—	"	1
" "	William Forsyth received	412—	"	1
" "	George M. Bond received	412—	"	1

There were no votes cast which were thrown out for informality.

LEWIS F. LYNE, } *Tellers.*
W. H. ODELL, }

Mr. John T. Boyd.—I have a small matter to bring before the meeting. It has been suggested, with a view to accommodating a large number of men who find it difficult to attend two meetings of the Society in a year, that the meetings should be reduced in number from two to one, and for the purpose of testing the sense of this meeting and also bringing the matter before the Society for the benefit of those members of whom I have spoken, one of whom really suggested it, I have a resolution here which I would like to read and place before the meeting.

Resolved, That the Council of the American Society of Mechanical Engineers be and are hereby requested to carefully consider and report to the Society at its next meeting, "on the advisability of having but *one* meeting each year instead of two."

That said meeting shall be held for the reading and discussion of papers, topics, etc., after the present plan, and less prominence be given to excursions as such, with a view to occupy the time allotted to the meeting mainly by the sessions; and

That the Council take such means to ascertain the views and wishes of the members on this question, either by letter, ballot, or other communication, as in its judgment seems most desirable.

The view expressed by the members with whom I have had an opportunity of talking, has been that very frequently, owing to the state of his business, it is rather difficult for a man to get off twice in a year. If he can make an arrangement to get away from his business twice in a year, he would like to give part to a summer holiday and part to a meeting, and if he has very urgent business reasons for remaining at home, he can probably arrange to attend one meeting, at which all the papers could be presented, whereas now the papers are divided, half at each meeting. If he cannot attend the meeting at which the papers he is most interested in are read, he has no opportunity of hearing the discussion, which, in many cases, is the most important part. As to the time of the meeting, that is a matter which must be left to the Council of the Society. For the benefit of those who are not here and those who are here who favor it, I think it would be well for such members, at such time as the Chair decides, to have an informal expression of opinion and have the resolution referred to the Council for their action. I know in some cases some of us have had to give up our summer holidays, at least part of them, to be present at this fall meeting. I hope the matter will be very fully discussed.

Mr. Geo. H. Babcock.—I do not see the object of the proposed action in view of the rules of the Society, because now the Council have full authority to arrange for one or more meetings, as they see fit, and therefore I do not see any necessity for a resolution of this kind. But independent of that, the question itself is one that is well worthy of consideration. I, for one, would not be in favor of taking such a backward step as would be involved in giving up one of our semi-annual meetings for several reasons. One is, that I have seen similar steps taken by other organizations, and in every instance it was equivalent to suicide. I think it would have a similar effect upon this Society,—not that it is absolutely necessary for this Society to have two meetings a year in order to live, but that having enjoyed the advantages of semi-annual meetings, with ever-increasing interest, giving up one of them at the present time would so destroy the interest in the Society as to have a very prejudicial effect, if it did not bring on a decline, which would cause the Society, finally, to become extinct. This may seem a strange statement, but I have seen so many instances where the giving up of a portion of the meetings of an organization had that effect that I should be very much

afraid it would be the same in this case. At least, it would be a confession of weakness. Again, we do not have any too many papers read before the Society at the present time; our Transactions are none too large; none of us would like to see them smaller. Nor have we any too much time in the meetings which we now hold—the two meetings—to present and discuss the papers which we have. If there was but one meeting it would be impossible for us to hold it together long enough to discuss all the papers, unless it were held in sections, like the meetings of the American Association for the Advancement of Science, and some other societies. By this means it might be possible to crowd into one meeting enough to fill a volume of Transactions, but that would multiply the objections urged against holding the two meetings, because no one person could attend two or more sections at the same time. The proposed change, if carried out, would have one advantage, but I can see no other; it would reduce our annual expenses about $450, judging by the report of the Finance Committee, provided we did not reduce the size of our volume of Transactions at the same time. That is, if we undertook to crowd into one meeting all the work now done in two meetings, so as to keep our volume up to the present size, it would reduce our annual expenses less than five per cent., which would not be of sufficient importance to justify the changes. It is claimed that it is difficult for some of the members to attend two meetings in a year. It will be noticed that we have not had at any meeting yet, much, if any, over twenty per cent. of the membership in attendance, so that a very large majority of our members do not now attend these meetings. It is probable that no larger number would attend a single meeting than now attend each of the two meetings. The inducement to attend would be no greater because of two meetings being crowded into one. I am quite certain that the Society would find it a mistake to take this backward step. (Applause.)

Mr. Howell Green.—I certainly agree with the remarks made by Mr. Babcock in this matter. There is more to be learned by engineers, particularly young ones, in the informal discussions at our meetings, than there would be in the most ponderous written papers. When mind meets mind in the discussion of a question, it becomes sharpened. There is more good done in every way. For one, I am particularly impressed with the idea that the meetings should not be more infrequent. The tendency of such societies is to degenerate into a slow-moving bureau system of

management, where the officers of the society, or a selected few, will prepare papers in cliques, and will insist on presenting their ideas for transmission through the mails to the rest of the members, whereas in those frequent interchanges when the men can meet each other face to face and become acquainted with each other and the live questions of our profession are discussed in the presence of all, incalculably more good is done.

Mr. W. F. Durfee.—If I understand the rule of the society, it would appear that under it it would be impossible for any change of this kind to be effected under a year at the very least.

The Chairman.—Yes, under the rules, the annual meeting must be held in November, either in New York or elsewhere, as decided by the Council, and other meetings may be called by the Council. The spring meeting has always been called by vote of the Council. There is nothing in the constitution which compels the society to hold a spring meeting. It has always been done in obedience to the sentiment of the members.

Mr. Durfee.—Well sir, in view of that fact, and of the very general applause that attended the remarks that were made, in which I most fully concur, I should say there was not any immediate danger of such a resolution taking effect. (Applause.)

Mr. J. F. Holloway.—I concur most heartily with what has been stated by others in regard to this measure. There is one other feature about it which perhaps is worthy of consideration, that is, that in holding two meetings a year we are enabled to hold them in different parts of the country. This is very essential now, since the society has so extended a membership and is increasing as rapidly as it is. It is very important that various sections of the country should have the advantage of meetings held in their vicinity, and if there was but one meeting a year, it would deprive a very large number of the members from attending, simply because it would necessarily be so very far from their place of residence, that it would be quite impossible for them to give to it the necessary time. I am quite certain that one annual meeting could have no more of interest, no more of attendance, no more of papers, than a meeting held semi-annually, and I am sure that such an audience as this is evidence enough that there is a sufficient interest in the meetings as they are being now held, and to diminish the number of our meetings, and hold them in remote places but once a year, would have the effect of preventing very many from attending them. No man regrets any more than I do

the missing of a single meeting, but it is my loss alone and not the loss of the society. I make it up as best I can in reading the Papers, and the discussions, and I get the worth of my money in the printed Transactions of the society, and because I cannot go to all the meetings, I certainly do not want to have them lessened, and I think that it would be the sentiment of nearly all the members, that two meetings a year are essential.

Mr. C. N. Trump.—There is one thing which has not been mentioned in the discussion, and I will mention it simply to call the attention of the mover of the resolution to it. Very many of us cannot possible fix a time when we could leave for the attendance of one meeting, while we might possibly be able to reach one or the other of two during the year.

Mr. Boyd.—In answer to that I would say, that this question has been raised by some of the members as a reason in favor of the resolution. The gentleman who was really the author of the suggestion to have but one meeting, stated that very often owing to a press of business which is liable to arise in the fall, a man is more apt to make his plans to attend the spring meeting instead of the fall meeting, and when the time of the spring meeting comes around, he may find he cannot possibly go; whereas, if there was but one meeting at which all the papers were presented, it might lead to a more successful effort on the part of a greater number of members to attend one meeting. What we want to do is to follow the views and ideas of the society, and not those of any one individual under any circumstances. I offered the resolution at the suggestion of others, simply to obtain an expression of opinion. Another reason advanced was that some members were very much afraid that the frequent excursions and affairs of that kind would be an attraction which would be equal to the object of coming to hear the papers read. The idea seemed to be that it might be well to have an excursion once in every two years—to have an excursion which would be known as an excursion. I am very glad, indeed, to have had a full expression of opinion, because it will give me an opportunity to explain the position to those gentlemen who seemed to have the matter most at heart.

Mr. Thomas R. Pickering.—I would prefer that the society should have three meetings a year instead of one. It often happens that it is very difficult for members to attend one of two meetings just at the time for which they are assigned; whereas,

if a third one were held they would have an opportunity of being benefited by an attendance at one meeting at least.

Mr. Lewis F. Lyne.—I conscientiously believe that the phenomenal growth of this organization and the lively interest taken in the topical discussions and the reading of papers has been due chiefly to the frequency of such meetings. I happen to be at the head of an institution which holds annual meetings, and at the last meeting we were unable to transact our business, and consequently we were put back one year. I for one do not expect to attend every meeting of this organization, except when it happens to be near my locality, but there are others who live in the locality where we hold these meetings who are very glad to have the opportunity of taking part in the discussions where otherwise they would be utterly deprived of that privilege. I think, as a matter of right, that we should continue in our present course in order to give all our members, as far as possible, the advantages of the organization. (Applause.)

Mr. W. S. Rogers.—I am reminded of an expression which was made use of once by one of our older members who is not here to-day. He told me to attend all the meetings that I could. "But," he said, "if you cannot go to a meeting you have still an advantage; when I go it does me good, but if I do not get there I have all the papers sent me, and I have all the arguments on my own side," and he says, "I have just as much enjoyment as if I was there, except that I do not get a chance to shake hands." But I want to go a little further than the last speakers; I am selfish in the matter; I would like to have the meetings every Saturday. (Laughter.) I do not want one meeting; I want lots of them. If they are in my locality and I cannot get there, I will do as my friend does—I will get the documents and I can argue it out a great deal longer than if the others were at hand to talk me down.

Prof. R. H. Thurston.—It is almost a waste of time to discuss the matter further; but it may do no harm, as the matter goes on record, to state on what theory we started our system of meetings. If you will read over our constitution and by-laws, I think you will find that they have been very carefully considered. They were first prepared by Alexander Holley and his committee, two or three gentlemen who perhaps were as competent to frame such a plan as any then living, or to-day living. The consideration of the number, the place and the time of the meetings was of prime

importance, and they were settled upon this theory:—It was considered that we should have one meeting, unquestionably, every year, at the headquarters of the society. The headquarters of the society were placed in New York, because that was the great center of the kind of work and trade in which we are interested; that is to say, there is no place in the country at which it is so easy to concentrate members, and to which they will so naturally drift at certain periods of the year, and that was decided in the expectation that members would make arrangements to come to New York and transact their business there at that time. Then it was proposed to have two other meetings—three meetings per year, the other two meetings to be held peripatetically, in one city to-day and another to-morrow, for the double purpose of enabling members out of New York to meet each other in other sections, and for the second purpose of doing a sort of missionary work—sending out members of the society to portions of the country in which there might be many having common interests with ourselves, but who had not as yet learned the object of the society; and it was supposed by keeping a firm hold on New York City as headquarters, forming a nucleus there that should be immovable, that we could secure the desired permanence, and by sending out members at our missionary meetings we could bring into the society a great many members who otherwise might be unaware of the advantages that would accrue to them by joining the society and attending the meetings. The first year we attempted to carry out this programme; but we had then very few members, and yet the three meetings of the first year, if I remember right, were much better attended proportionally than the meetings are now. But it was a little inconvenient to put two of these meetings so near together—one in the early spring and one in midsummer, and it was proposed to try a system of two meetings only, one held annually in New York, and the other outside that city. That plan has been adhered to since. The attendance at the two meetings is not as great at either meeting, proportionally, as it was before, and I think if we were to adopt the plan now proposed, of a single meeting, the proportion of members would by no means be double the proportion attending each meeting at present. I think it would be found that the simple fact of reducing the number of meetings from two to one would be taken as a confession of weakness, and that the society would lose some strength and some moral status in consequence. The

original plan has always seemed to be a good one, and I should myself personally prefer to hold the annual meeting at New York City and the second meeting, or even a third meeting, at other points in the country, going from point to point, as the popular demand might lead us, from year to year. In handling the British Association for the Advancement of Science abroad and the American Association at home, it has been found very important to secure these transitions from point to point in the country; and the building up of those enormously great societies is largely due to the fact that a point was found for each meeting at which they were sure to have a large attendance, and I think it will be found that this action would be advantageous here. Again, I think that as the society increases in numbers, it will be found there will be no difficulty in securing a large attendance and a good supply of papers at each of our two meetings, and even three; and I can imagine the possibility of the society growing to such an extent as to have a membership numbered not by hundreds but by thousands, like the British Institution of Civil Engineers. I can imagine our holding quarterly meetings, well supplied with papers, and the growth of the society enormously stimulated by the fact of having three meetings every year held in different parts of the country. I am very sure from my own observation that our policy will be to hold at least two meetings and very likely to return to three, and not improbably to have at some time quarterly meetings, and that the more closely we adhere to the original plan of Mr. Holley and his friends, the more prosperous will our society become, the more firmly will it be established, and the more rapid will be its increase of membership. (Applause.)

Mr. Boyd.—For the purpose of closing the discussion, with Prof. Thurston's consent, as he very kindly seconded it, I beg to withdraw the motion. (Applause.)

Prof. Hutton.—I think it is desirable that the motion presented by Mr. Boyd should not be withdrawn. It seems to me important that the discussion of this question should go on record in the Transactions, and for this reason I hope he will not press the withdrawal of his motion.

Prof. De Volson Wood.—It seems to me that the rule is so wisely drawn that there is no need of considering a revision of the rule; that all the abuses, if there be such, of excursions, of excessive number of meetings, of excessive number of papers, or of any-

thing else pertaining to the meetings and the papers, may be regulated by the wishes of the society through the Council, so that it seems to me quite unnecessary to instruct them at this time in regard to this matter. I move that the resolution be laid on the table.

Mr. Boyd.—I think that in view of the expression of opinion, which has been so universally against the motion, it would be just as well to withdraw it. The matter is discussed simply with a view of getting at what was best to the interest of the society, and I hope the motion will be allowed to be withdrawn.

The Chairman.—I would remind the gentleman that a motion cannot be withdrawn when seconded, except by unanimous consent.

Prof. Hutton.—My point is that the withdrawal of the motion would withdraw the discussion of it and the expressions of opinion on the question to which it relates. These opinions will form too valuable a guide to be lost, and for this reason I object to the withdrawal proposed.

Prof. Wood's motion to lay on the table was seconded and carried.

Mr. Durfee.—I understand that under that resolution the discussion will be printed.

The Chairman.—Yes, sir.

The circular of the Committee of the Franklin Institute of Philadelphia in reference to the Cresson and Scott medals was read, and after announcements as to the conduct of the meeting, the professional papers were taken up.

The paper of Mr. Chas. T. Main, "On the Use of Compound Engines for Manufacturing Purposes, the Relative Areas of the Cylinders, and the Regulation of the Pressure in Receiver," was discussed by Messrs. Denton, Hutton, Babcock, Durfee, Borden, Suplee, Wheelock, Thurston, Wood, Odell, Rogers, Lyne, and Freeman. After announcements by Mr. W. F. Mattes, Chairman of the Local Committee of Arrangements, the two papers by C. H. Peabody of Boston were read together. Their titles were "Flow of Steam in a Tube" and "A Simple Calorimeter," and were discussed by Messrs. Denton and Babcock, after which the meeting adjourned.

Third Session. Wednesday, October 17.

Called to order at 10 o'clock by Vice-President Woodbury. The first paper was the joint one by Messrs. S. W. Powel and

W. L. Cheney, "A System of Worm Gearing of Diametral Pitch," which was discussed by Messrs. T. S. Crane and Oberlin Smith. That by Mr. C. A. Smith of Providence, "An Improved Method of Finding the Diameter of Cone and Step-Pulleys," was discussed by Messrs. Sweet, Denton, and Binsse; that by Mr. F. A. Scheffler of Erie, "A Foundry Cupola Experience," was discussed by Messrs. Snell, Durfee, Firmstone, Suplee, and Barr.

Prof. Lanza's paper, "Some Tests of the Strength of Cast Iron made in the Laboratory of Applied Mechanics of the Massachusetts Institute of Technology," was discussed by Prof. Denton. The paper by the latter, "On the Identification of Dry Steam," illustrated by photographic reproductions of appearances of steam jets, was discussed by Messrs. Emery, Peabody, Weightman, Babcock, and Durfee. Mr. Chas. E. Emery of New York then read his paper, "The Cost of Power in Non-Condensing Engines," and it was discussed by Messrs. Denton, Barr, and Wheelock.

Prof. Lanza's second paper, "An Account of Certain Experiments upon Several Methods of Counterbalancing the Action of the Reciprocating Parts of a Locomotive," was discussed by Mr. C. E. Emery.

At the close of this paper, the Topical Queries were taken up, and Messrs. Whitehead, Bond, Barr, Sweet, Oberlin Smith, Woolson, Holloway and Richards discussed the query:

"Is there any recognized method of deciding proper sizes of tap-drills for given threads and for different materials? And, if not, would it not be advisable to formulate one based upon the amount of metal corresponding to some fraction of depth of thread to be left in the hole to be operated upon by the tap for each material?

At the conclusion of this debate, the session adjourned.

Fourth Session. Wednesday Evening, October 71.

The session was called to order at eight o'clock. The two papers by Prof. J. B. Webb, of Hoboken, N. J., were the only two read at this session. The first was entitled "The Overhauling of a Mechanical Power," and the second was "The Mechanics of the Injector." The first paper was discussed by Mr. Oberlin Smith, and the second by Messrs. Kent and Denton.

After these two papers, the assigned discussion on Steel Phenomena was begun. This discussion was based upon the resolution at the Nashville Convention, reported at page 727 of Volume IX. of the Transactions as follows:

"I think this discussion of the peculiar phenomena exhibited in steel is so very interesting that we ought to have some day a sort of symposium presented by the members of the Society on steel phenomena. Each member can contribute, what would amount perhaps to half a page, describing some peculiar phenomena which he has witnessed, bringing facts, not theories, that will add to the amount of our knowledge on steel and lead to some true or some better theory of these peculiar phenomena. I make that suggestion for the topical discussions for the next meeting."

The queries were as follows:

What experiences and phenomena can you describe as to the conduct of steels under the conditions in which you were using them?

How much allowance is wise in shrinkage fits with steel?

What is the best form of cross section to adopt for steel castings of a complicated nature, in order to secure solidity and freedom from shrinkage cracks?

How often must the skin of steel be removed in grinding true gauges, etc., before change of form ceases?

The debate was participated in by Messrs. Hibbard, Fuller, Kent, Huston, Stetson, Dingee, Fawcett, Main, O. Smith, Hunt, Denton, Sweet, and Bond, by several of whom illustrative samples were exhibited. The debate was arrested before its conclusion in order to admit of a trip on the Suburban Electric cars.

Fifth Session. Thursday Evening, October 18.

This was called to order at eight o'clock by Vice-President Henry G. Morris, who took the chair. The paper by L. H. Rutherford, of New York, was presented by F. R. Hutton, and was entitled "The Strains on an Annular Lid Resisting Internal Pressure." It received no discussion. The paper by Mr. C. J. H. Woodbury, of Boston, was entitled, "Electric Welding," and was discussed by Messrs. Kent, Oberlin Smith, and Ralph I. Pope (by invitation).

The discussion of steel phenomena was again taken up, being participated in by Messrs. Hunt, Richards, Yost, Barr, Wheelock, Oberlin Smith, Crane, Whitehead and Hutton.

The query:

"What is the best method of preventing variation in pitch of screw-threads, as cut by dies in the screw-machine, resulting from irregular stretching or flow of the metal, caused by the action of the dies when operating upon large numbers of comparatively long screws of small diameter?"

was discussed by Mr. Whitehead.

At the close of these discussions, the following resolutions were severally presented:

By Mr. B. H. Warren, seconded by Mr. Oberlin Smith:

Resolved, That the American Society of Mechanical Engineers desiring to express their high appreciation not only of the honor conferred upon them by the Board of Trade of the city of Scranton, in the official invitation sent them through their President, William Connell, Esq., and J. H. Fisher, Secretary, to hold their eighteenth meeting in this city, but as well for the attention and kindness shown them during their stay, hereby tender them our sincerest thanks and would as well express the hope that through the efforts of the Board of Trade supplemented by the labors of the Mechanical Engineers, the city of Scranton will continue to show in the future the same marvelous development that has marked its progress in the past.

By Mr. Robert Hunt, seconded by Mr. Durfee:

Resolved, That the American Society of Mechanical Engineers hereby expresses to the Entertainment Committee, through its chairman, Col. Boies, so ably assisted by the ladies, its cordial thanks for the opportunities so pleasantly offered for meeting the citizens and ladies of Scranton, and for the many other courtesies so warmly extended, and especially in their kind attentions to the ladies of the visiting members, and to tender congratulations to the committee and ladies, that they are enabled to extend those hospitalities in a city so charming in its location and beautiful surroundings, its well-known educational system and advantages, and its commercial honor and integrity.

By Mr. George H. Babcock, seconded by Mr. Weightman:

Resolved, That the hearty thanks of the ettending members and guests of this society are hereby expressed for the hospitality extended by the Erie and Wyoming Valley Railway and Delaware and Hudson Canal Company, by whose liberality, courteously administered in person by their respective superintendents, Mr. George B. Smith and S. A. McMullen, we have enjoyed a delightful excursion through one of the most picturesque regions of our country, and have experienced the pleasure and novelty of a ride over the famous Gravity Road of the anthracite coal fields.

By Prof. J. E. Sweet, seconded by Mr. J. T. Boyd:

Resolved, That the thanks of this meeting are hereby expressed to the Dickson Manufacturing Co., through its manager, Mr. J. P. Dickson; the Lackawanna Iron and Coal Co., through its manager, Mr. E. S. Moffat; the Pine Brook Colliery, through its manager, Mr. Brooks; the Boies Car Wheel Co., through its manager, Mr. Pearson; and the Scranton Packing Co., through its manager, Mr. Hendricks, for the courtesy extended it in opening their interesting works to inspection and for the cordial manner in which visitors were entertained.

Resolved, That the thanks of this society are hereby tendered to the Suburban Railway Company, through its courteous President, Col. Geo. Sanderson, for the privilege of inspecting the appliances and enjoying the use of their novel and progressive enterprise.

By Prof. J. E. Denton, seconded by Mr. Bond:

Resolved, That the members of this society hereby tender their thanks to Messrs. Dexter, Lambert & Co., of Hawley, for the opportunity so courteously offered for visiting their silk mills; also to Messrs. Christian Dorflinger & Sons for like courtesies during a visit to their glass works at White Mills, where they

enjoyed the privilege of witnessing the interesting and intricate operations of their respective industries.

By Mr. W. M. Barr, seconded by Mr. Suplee:

Resolved, That the society tender its thanks to Mr. W. W. Scranton for the invitation extended by him to visit the Scranton Steel Works, and say to him that while it has been impossible up to this time to avail ourselves of the same, that we hope to be able to do so before we leave the city.

By Acting-President Woodbury, seconded by Professor F. R. Hutton:

Resolved, That while all have done much to make our visit to Scranton one of pleasure as well as profit, we recognize the fact, that here as elsewhere, the burden falls on the local committee, and ere we turn our faces homeward, we would tender them and their attentive and efficient chairman, Mr. W. F. Mattes, our heartiest thanks for all the good things they have done for us.

After a few words of reply from Mr. Thomas Dixon, of the city of Scranton and the repetition of the announcement that the Spring Convention of 1889 would be held in the city of Erie, Pa., the meeting adjourned.

Excursions.

Tuesday afternoon was devoted to a visit to the works of the Lackawanna Iron and Steel Co., including both the iron furnaces and the steel plant.

In the evening a reception was tendered to the society and their ladies by the Board of Trade of Scranton. This was held in the parlors of the Y. M. C. A. building, with music and a collation.

Wednesday afternoon was devoted to visits to the shops of the Dickson Mfg. Co., the Boies Steel Car Wheel Works, and the Pine Brook Colliery. In the evening, after the adjournment of the professional session, the members took a trip over the line of the Suburban Electric Co., stopping at their power plant.

Thursday was devoted to the trip to Honesdale, stopping at Hawley and White Mills at the silk mills and glass works respectively. From Honesdale the party returned to Carbondale over the gravity lines of the D. & H. C. Co., and from thence back to Scranton.

Friday morning a visit was paid by the society to the Scranton Steel Works at the invitation of Mr. W. W. Scranton, its president, after which the members dispersed.

CCCXII.

THE STRAINS IN AN ANNULAR LID RESISTING INTERNAL PRESSURE.

BY L. H. RUTHERFORD, FRANKLIN, PA.
(Presented by F. R. Hutton.)

INTRODUCTION.

The occasion recently arose in the writer's practice to decide upon the strains in an annular casting, to which a flexible diaphragm was secured, when fluid pressure came normally upon the latter. A large cylindrical vessel, seventy-three inches in diameter, had to have a lid which could be easily opened, and should be light. It was therefore decided to make this lid of copper sheet $\frac{3}{8}$ of an inch thick, and to rivet this copper to a cast-iron ring, which would give the necessary stiffness to secure a steam-tight joint when bolted to the flange of the cylinder, and would allow of arranging a convenient hinge structure. The copper part was a segment of a sphere struck with a radius of fifty-seven inches, running into the tangent at 30°, as shown in the sketches, and was riveted by eighty-four copper rivets at $2\frac{1}{2}''$ pitch. The diameter of the pitch circle of the rivets was 66 inches.

The section of the cast-iron ring is shown in Fig. 3, where it will be observed that the lid was held to the flange by 16 bolts, 2″ in diameter, and the tightness of the joint against leakage was secured by a ring of sheet rubber $1'' \times 1\frac{1}{4}''$, let into a groove. The vessel had to withstand an internal pressure from steam of 65 lbs. to the square inch, tending to blow out the copper and flex the cast-iron ring to which it was riveted. It was early found in the investigation that the strain in the ring could not be evaluated by the simple arithmetical methods which are usual and preferable, since they could not be made to embrace the intricate relations of the stresses. The interest of such a case to designers generally, and the advantage which it may prove to others to be able to refer to such an analytical investigation, have induced me to request Mr. Rutherford, by whom it was undertaken, to consent to its publication in the Society's Transactions. F. R. HUTTON.

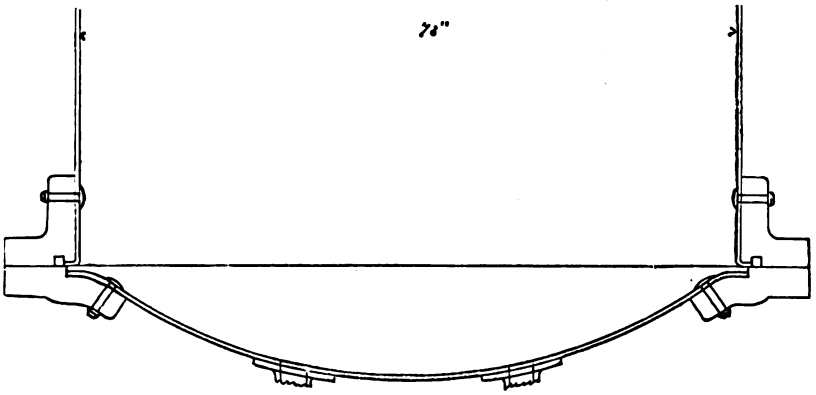

FIG 1.

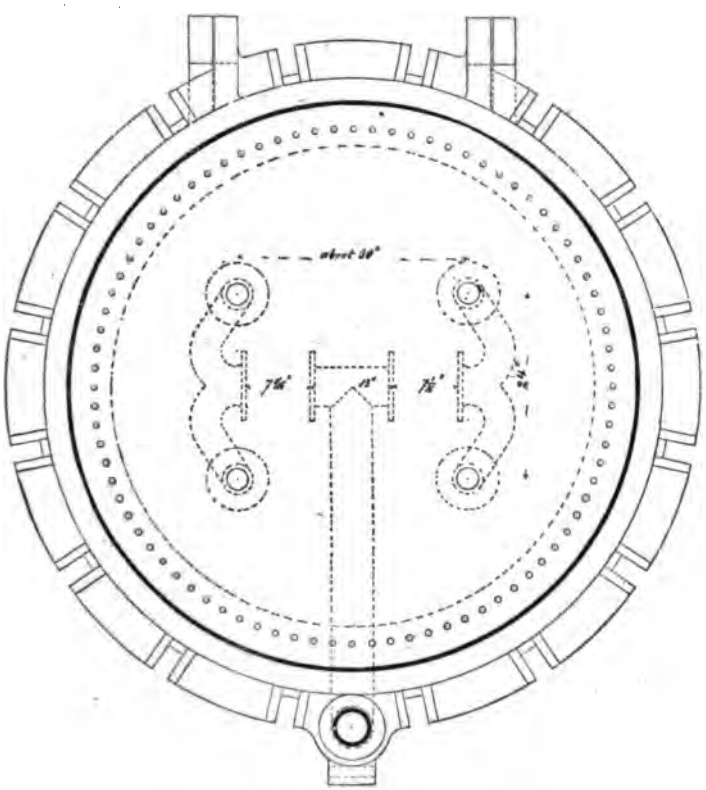

SCALE 1 IN. = ONE FOOT

FIG. 2.

In order to make the investigation as comprehensive and general as possible, the particular conditions of the specific problem which occasioned it will only be alluded to incidentally as a means of illustration, until the close of the deduction, when they will serve to illustrate its application.

We will first assume, for convenience of reference, that, as in the given case, the annular ring of metal, whose conditions of strain are to be determined, is in a horizontal position, with a vertical axis of symmetry. We will further assume that this ring is held up against the external forces applied to it, by a continuous circular abutment, upon which it rests (secured in the given case by a system of bolts), and this line of support will be known hereafter as the *abutment circle*. Where an axis is spoken of, that of the ring is always meant, and the center of the abutment circle will be found in this axis.

This investigation is designed to cover such cases only, in which the forces acting on the ring are symmetrically disposed about its axis, both as regards direction, point of application, and intensity, in which case it may readily be seen that the elements of any special set of forces are equally inclined to the horizon; that their lines of direction, unless vertical and therefore parallel with it, all meet in the same point of the axis; and that their points of application to the ring are in the circumference of a circle, whose center is in that axis, and which may be called the *circle* or *line of application* of that particular set.

In the case of the given cylindrical vessel, of which Fig. 1 is a sectional elevation, Fig. 2 a plan, and of whose cast-iron ring Fig. 3 is a semi-section, the external forces acting on that ring are, 1st. The direct steam and fluid pressure on its exposed surface, whose width radially is the irregular line *EFGH* (Fig. 9 *seq.*), the directions of pressure being normal to the different portions of that surface, the pressure on each portion forming a distinct set; 2d. The force applied to it on account of its connection with the flexible copper bottom, the line of application of which is the rivet circle, and the lines of action of whose elements make an angle of 30° with the horizon; 3d. The reaction of the continuous abutment, whose line of application is the abutment circle, as at *C* (Fig. 9 *seq.*), the lines of action of the elements being vertical. The total *downward* pressure of the first two classes must therefore be equal to the *upward* reaction, which constitutes the third class, the other components holding themselves in equilibrium, as shown in the general discussion which follows.

Every elementary force acting on the ring should be resolved into two components, the first being horizontal, and the second parallel to the line of reaction of the nearest point of the circular abutment; for the reason that the two resulting classes differ entirely in their manner of causing strain in the ring. The horizontal components will all be radial, and each complete set or ring of such components holds *itself* in equilibrium, by reason of the diametral opposition and equality of its elementary parts, and the

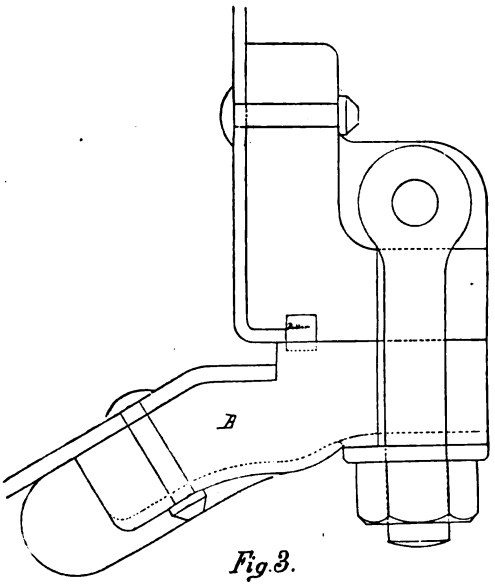

Fig. 3.

continuity of the ring solely; while the sum total of the components parallel to the lines of reaction of the circular abutment is only held in equilibrium by an *independent* force, equal in magnitude and opposite in direction, viz.:—the reaction of that abutment.

The horizontal components will always cause a *direct* strain of tension or compression in the ring, normal to its cross section, which may be considerably modified by an *additional* indirect strain, when the points of application of those components are above or below the horizontal plane passing through the center of gravity of any cross section of the ring, because such eccentricity of action will develop a moment of internal resistance to flexure. The horizontal line passing through the center of gravity of any cross section, is the neutral axis, with respect to which the moment of the resistance to extraneous force is calculated, as will appear later.

Before passing on to a consideration of the character of the internal strains produced by the second class of extraneous forces, or the components parallel to the lines of reaction of the abutment, it would, perhaps, be well to determine the relation and magnitude of these strains, which have just been described. The *direct* strains due to the horizontal, radial components are exactly similar to those in a section of cylindrical pipe exposed to external or internal pressure, or both (the character of the prevailing strain being simply a question of numerical supremacy); and the method of determining their amount is the same in principle as the old familiar method of determining the bursting pressure for the longitudinal seam of a steam boiler. While the ring remains intact, the forces acting on one-half hold in equilibrium those acting on the other half, so that the tendency is to cause a failure of the ring at the extremities of any diameter, and to determine the strain, it will only be necessary to find the cumulative effect of all the forces acting on one-half, in a direction at right angles with the given diameter.

First find from the conditions and data of the problem, the total magnitude (that is all around the ring) of any one set of radial components (and for the sake of example, let them be directed toward the center, producing compression), and the radius of its line of application. Let the circumference $A\ C\ B$ Fig. 4 be the plan of this line of application; let dx (differential of x) at C be an elementary portion of its length, whose angular distance from A, measured at the center D is θ; and let $A\ B$ be the given diameter. Let F_1 be the total force directed toward the center, and R be the radius of the circumference $A\ C\ B$. Then the force per linear unit of the circumference will be $\frac{F_1}{2\pi R}$, and the elementary radial force corresponding to a length dx will be $\frac{F_1\,dx}{2\pi R}$, and its component perpendicular to the diameter $A\ B$ will

Fig. 4

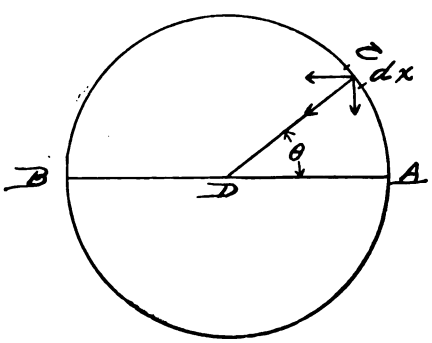

be $\frac{F_1\, dx \sin\theta}{2\pi R} = dP$ (differential P). Now $x = R\theta$ or $dx = R\, d\theta$, so we have $dP = \frac{F_1 R \sin\theta\, d\theta}{2\pi R} = \frac{F_1}{2\pi} \sin\theta\, d\theta$. To obtain the total force perpendicular to the diameter, integrate this expression through a semi-circumference, from $\theta = 0$ to $\theta = \pi$ with the result $P = \frac{F_1}{2\pi}\int_0^\pi \sin\theta\, d\theta = \frac{F_1}{2\pi}(-\cos\pi + \cos 0) = \frac{2F_1}{2\pi} = \frac{F_1}{\pi}$. This force resists a similar one on the other half of the ring through the two cross sections at A and B, between which, therefore, it is to be divided; so that each section sustains a pressure of $\frac{1}{2}\frac{F_1}{\pi}$ and if A is the area of the section in square inches, the unit pressure will be $\frac{F_1}{2\pi A.}$ Similarly for any other force F_2 producing either tension or compression, we shall have $\frac{F_2}{2\pi A}$. Therefore, to determine the ultimate *direct* unit tension or compression in the ring, take the separate sums of both kinds of stress and divide the excess of the greater over the less by 2π times the area of the cross section in square inches, thus, $\frac{\Sigma(F)}{2\pi A.}$ This stress, *uniform* throughout the section, always obtains where there are any horizontal components; but, as stated before, it may be modified by the eccentricity of action of the forces. When a prismatic body is subjected to an eccentric thrust or pull without failure, it not only sustains that force, but also develops a moment of resistance to flexure about that neutral axis of its cross section, with respect to which that moment is least. Now, in the case of two opposite sections of the ring, we have in reality one, as the ring is continuous between them, and the neutral axis with respect to which the moment of internal resistance is least, is obviously the horizontal line passing through the centers of gravity of the two parts; and the effect on the ring would be similar to a slight angular motion in a hinge opened out flat, were it not that every other cross-section of the ring is affected in the same way, whereby one part of the ring is extended and the other compressed throughout, without destroying its perfect annularity as a whole.

Let Fig. 5 represent a cross section of the ring, $A\ B$ being the line through the centers of gravity of the two parts M and N, and $C\ D$ the trace of the plane in which any given set of horizontal

components acts. If F_1 is the total magnitude of such a set, we have found before that the force for *each* of the sections M and N and perpendicular to it, is $\frac{F_1}{2\pi}$, and if $C\,D$ is at a distance m_1 from $A\,B$, the moment of the force $\frac{F_1}{2\pi}$ is $\frac{F_1 m_1}{2\pi}$, and for any other forces F_2 F_3, etc., with lever arms m_2, m_3, etc., we have the moments $\frac{F_2 m_2}{2\pi}$, $\frac{F_3 m_3}{2\pi}$, etc., and for the total moment with respect to the neutral axis $A\,B$, the algebraic sum of the separate moments or $\frac{\Sigma(Fm)}{2\pi.}$ Now the moment of resistance of the section M, according to the

Fig. 5

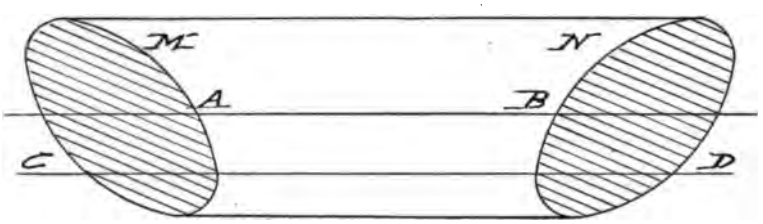

well known formula is equal to its moment of inertia with respect to the line $A\,B$, multiplied by the ratio of the unit strain at any point, to the distance of that point from the line $A\,B$, *i. e.*, if f is the unit strain at a distance d from $A\,B$ and I is the moment of inertia of the cross section we have the moment of resistance $M = \frac{f}{d} I$. Equate this moment of internal resistance with the moment of external force as above and we have $\frac{f}{d} I = \frac{\Sigma\,(Fm)}{2\pi}$ and from this $f = \frac{\Sigma(Fm)d}{2\pi I}$ in which $\Sigma(Fm)$ is given by the conditions of the problem, and I is a matter of calculation from the cross-section of the ring. The greatest unit strains occur, of course, in those portions of the ring at the greatest distance from the neutral line $A\,B$, one for compression, and one for tension. Giving to d

the particular values corresponding, we deduce values for the greatest unit strains of *induced* tension or compression, with each of which is to be combined the *direct* tension or compression, already found to be equal to $\frac{\Sigma(F)}{2\pi A}$; taking the sum in the case of the two similar strains, and the difference in the other.

The writer makes no claim to originality in the foregoing analysis, save in the discovery of its adaptability to the solution of a part of the problem, without which, the solution would be incomplete; but that which is to follow is the answer to a question, which so far as he knows, has not been answered, or even asked before; and he trusts that the answer, though failing, perhaps, to be of any service, may be of sufficient interest to warrant the space accorded it, and the additional matter necessary to make the investigation complete.

The question is: Given, a metallic ring supported on a rigid abutment, touching it throughout, on one of the circumferential elements of its surface, what will be the strains induced by the application of continuous and uniform sets of external force, whose elements are parallel to the lines of reaction of the abutment? If the elements were not so parallel, it is obvious that the ring would tend to wedge its parts together or apart by sliding on the abutment; *i. e.*, horizontal components would be created, affecting the ring in a manner already described.

The ring being elastic, rigidly held throughout a certain circumference, and being acted on by forces whose lines of action do not (in general) pass through the line of support, will, yielding to these eccentric forces, suffer a slight symmetrical deformation, expanding outwardly in all its parts (until an equilibrium is established between external force and internal stress) so that each particle moves through a small angular distance. The most natural center of angular motion would seem to be, in each case, that point of the abutment circle in the axial plane passing through the given particle (see point *C*, Fig. 6 *seq.*); but that such is *not* the case will be shown farther on, and for the present we will content ourselves with some assumed arbitrary circle of centres of motion, and afterward discover, if possible, the real one. The angular displacement to each particle will be the same, and the actual displacement will be proportional to the distance of the particle from the center of motion, *i. e.*, to its radius of motion, Let us conceive the ring to be a bundle or aggregation of continuous circular filaments, whose

planes are all horizontal, and centers found in the axis of the ring. Let Fig. 6 represent a semi-section of a given ring, made by an axial plane, $A\ B$ being the axis, C the corresponding point of the abutment circle, D the assumed axis for this section, and $D\ E$ the horizontal line through D, which cuts the axis $A\ B$, in E, to be known as the center of the ring. F_1, F_2, F_3, are small forces, elements of their respective sets, tending to deflect that portion of the ring in the immediate neighborhood of the given section, about the point D. If the rigidity of the abutment presents any apparent difficulty in the conception of motion about D, this may be disposed of by supposing its reaction to be a live force tending to rotate the cross section about the same center D. Let I be the point where any

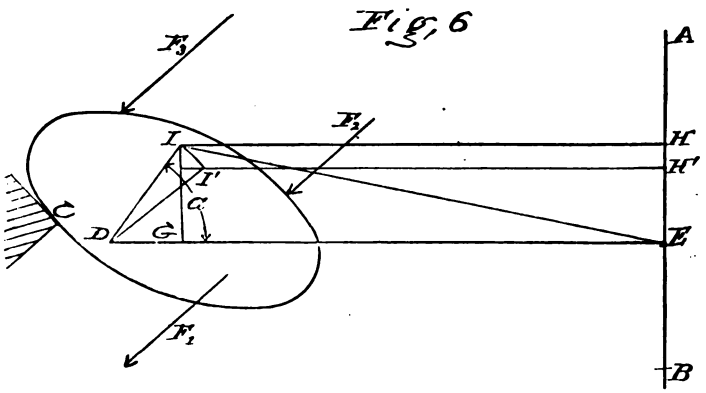

filament in its course around the ring passes through this section, any point of which, above $D\ E$, will obviously be brought nearer the axis, $A\ B$, and any point below removed farther from the axis by a downward angular motion about D, and as in this cross section, so throughout the ring, as the conditions are everywhere the same. Wherefore, it follows that any circular filament, of which I is representative, if above $D\ E$, will have its radius diminished, and if below, increased, by such angular motion, causing compression of that filament in one case, and extension in the other, with corresponding strains. As the line, $D\ E$, separates one class of filaments from the other, and is the line of no strain, it will be known as the neutral line. Let θ be the small angle through which the particles of the cross section are deflected; let a be the angular distance of the point I, at the center of motion, D, from the

line, DE; let c be its radius vector, DI, and let R be the distance of D from AB, *i. e.*, DE. Then the radius, IH, of the circular filament $I = R - c \cos a$. When the section is displaced through the angle θ, I moves through a distance, $c\theta$, and in so doing alters its distance from the axis AB, by the small quantity $\pm (IH - I'H')$ $= c\theta \times \sin$ (a nearly), (because θ is so small), *i. e.*, the radius of the filament has been changed by the quantity, $c\theta \sin a$, or from $R - c \cos a$ to $R - c \cos a \pm c\theta \sin a$, thereby changing the total length of the filament in the ratio of $\frac{c\theta \sin a}{R - C \cos a}$, so that if E is the modulus of elasticity, the unit strain in the filament is $\frac{c\theta \sin a E}{R - c \cos a} = f$. Let α be the angular distance of any other filament from DE, r its radius vector, and p the unit strain. Then $p = \frac{r\theta \sin \alpha E}{R - r \cos \alpha}$ and $\frac{p}{f} = \frac{r\theta \sin \alpha E}{R - r \cos \alpha} \div \frac{c\theta \sin a E}{R - c \cos a} = \frac{R - c \cos a}{c \sin a}$ $\times \frac{r \sin \alpha}{R - r \cos \alpha}$; or, $p = f \frac{R - c \cos a}{c \sin a} \times \frac{r \sin \alpha}{Rr \cos \alpha}$; and, if δA be the area of the cross section of the filament in which the unit strain is p, the total strain in that filament will be $\delta A \times p$, or $\alpha P = f \frac{R - c \cos a}{c \sin a} \times \frac{\delta A r \sin \alpha}{R - r \cos \alpha}$. Now, if we take EA and ED as coördinate axes, and refer the position of a filament to them, making ED the axis of x, we see that $R - c \cos a = DE - DG = GE = x'$, and $c \sin a = DI \sin a = IG = y'$, and in general, $R - r \cos \delta = x$, and $r \sin \alpha = y$, so we have $\delta P = \left(f \frac{x'}{y'}\right) \frac{\delta A y}{x}$.*

Having thus deduced a formula for the strain in any filament, in terms of the strain in a particular one, it remains to discover in what manner these strains are related to the external forces which cause them.

Let us suppose the ring to be divided by an infinite number of axial planes making an angle $d\theta$ (differential θ) with each other, into elementary segments, somewhat similar to the segments of a tube expander, each of which is so small that the *arc* of the abutment circle on which it rests is a straight line. *Let* $BCDE$, Fig. 7, be the plan of such a segment, A being the axis of the ring,

* In this expression x is independent of the position of the center of motion, D, and y depends only on its vertical position. It will therefore be unnecessary, and fortunately so, to push the inquiry further than to establish the *horizontal plane* in which the point D lies.

and $A\,C$ and $A\,D$ the traces of the axial planes which cut out the segment from the ring. Now, this wedge-shaped body $B\,C\,D\,E$,

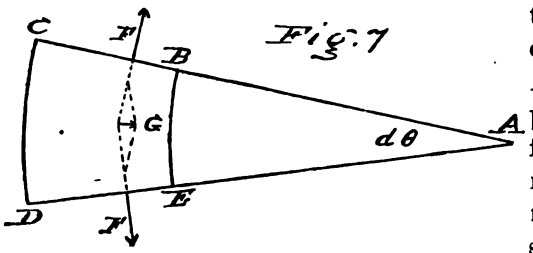

the angle of whose end faces $C\,B$ and $D\,E$ is $d\theta$, is held in place against external force by its attachment to the faces of the two neighboring segments, whose effect will be exactly reproduced if we apply to the ends of each filament in $B\,C\,D\,E$, found in the sections $C\,B$ and $D\,E$, a little force, the same in character and amount as the strain existing in that filament throughout its length. Let $F\,F$ be two such forces applied at the ends of a filament. As they are perpendicular to the vertical planes $B\,C$ and $D\,E$, they must be horizontal, and therefore, if we compound them, their resultant G will also be horizontal. If δP is the value of F, the resultant of two such forces making an angle $d\theta$ with each other will be $2\delta P \sin \frac{1}{2}\,d\theta$. But $\sin \frac{1}{2}\,d\theta = \frac{1}{2}\,d\theta$, so we have $G = 2\delta P \frac{1}{2}\,d\theta = \delta P\,d\theta$. In like manner every other pair of forces acting on the segment may be compounded. Replacing δP by its value we have $G = \left(f\frac{x'}{y'}\,\frac{\delta A y}{x}\right) d\theta$. Let Fig. 8 represent a vertical and axial section through the middle of the segment $C\,B\,D\,E$, Fig. 7. Let $A\,B$ be the horizontal line passing through the center of deflection of the segment; that is the neutral line. Then, at every point of this section there is applied an elementary horizontal force in the plane of the cross section of which G is representative, all forces above $A\,B$ acting in one direction, all below in the opposite direction. The elementary *reaction* of the abutment on this segment, and the *resultant* of all the other elementary *external* forces acting on it are equal to each other and opposite in direction, and therefore form a "couple," which can only be balanced by another couple*; consequently the elementary forces

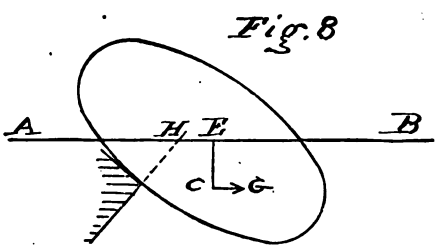

* Weisbach's Mechanics, 7th Ed., p. 200.

G applied to the cross section Fig. 8, must also form a couple, *i. e.*, the sum of all the forces above $A\ B$ must equal the sum of all the forces below it, or $\Sigma\left(f\frac{x'}{y'}\ \frac{\delta Ay}{x}\ d\theta\right)$ for the upper portion must equal the corresponding quantity for the lower portion, which will be the case when $\Sigma\left(\frac{\delta A\ [+y]}{x}\right) = \Sigma\left(\frac{\delta A\ [-y]}{x}\right)$, and this is the condition which serves to establish the position of the neutral line $A\ B$. This determination, can, however, only be made by trial, though the neutral line passes more nearly through the center of gravity of the section, as the *mean* radius of the ring is greater, and therefore, varies less for the particular points of its cross-section, *i. e.*, x varies less. Grant that the line $A\ B$, Fig. 8, is properly placed and let C be the point of application of the force G, then its lever arm with respect to the center of motion which is *somewhere* on the line $A\ B$ is $C\ E$ or y and the moment of G will be $f\frac{x'}{y'}\ d\theta\ \frac{\delta Ay}{x} \times y = f\frac{x'}{y'}\ \frac{\delta Ay^2}{x}\ d\theta$ and the total moment of resistance will be $f\frac{x'}{y'}\ d\theta\ \Sigma\ \frac{\delta Ay^2}{x}$, and it is this moment which is to be equated with the moment of the external forces acting on the segment and causing its angular deflection. This latter moment, being the moment of a couple, is the same wherever the center of moments be taken. For convenience, let us take that point for a center, in which the line of reaction of the abutment cuts the neutral line $A\ B$ at H Fig. 8. Let F_1 be the total magnitude of one set of forces and R_1 the radius of its line of application. Then the force per linear unit of circumference will be $\frac{F_1}{2\pi R_1}$. The length of the arc of this line of application, which lies on the elementary segment, whose sides meet in the axis at an angle $d\theta$, is $R_1\ d\theta$; and the force corresponding thereto will be $R_1\ d\theta \times \frac{F_1}{2\pi R_1} = \frac{F_1 d\theta}{2\pi}$, and if the lever arm of this force, with respect to the center of moments as above, is n_1, we shall have for the elementary moment $\frac{F_1 n_1\ d\theta}{2\pi}$; and if we take $\Sigma\ (Fn)$ to represent the sum of the products of each total force by the lever arm of any one of its elements, we shall have for the total external moment, $\frac{\Sigma\ (Fn)\ d\theta}{2\pi}$. Now this is equal to the

moment of internal resistance, or $f\frac{x'}{y'}d\theta\,\Sigma\left(\frac{\delta Ay^2}{x}\right)=\frac{\Sigma(Fn)\,d\theta}{2\pi}$, or $f\frac{x'}{y'}\Sigma\left(\frac{\delta Ay^2}{x}\right)=\frac{\Sigma(Fn)}{2\pi}$. In this formula $\Sigma(Fn)$ depends on the conditions of the problem, and $\Sigma\left(\frac{\delta Ay^2}{x}\right)$ on the form of the cross section of the ring; x' and y' are arbitrary coördinates, and when assumed, the value of f corresponding, is the unit strain at the point of the ring which they serve to determine, in accordance with the hypothesis by which they were introduced. If we examine Fig. 6 we see that for any point in the section, $\frac{y}{x}$ = tangent of the angular distance of that point, at the center, E, from the neutral line, DE. Calling this angle θ, we have $\frac{y'}{x'}=\tan\theta$, and $f\Sigma\left(\frac{\delta Ay^2}{x}\right)=\frac{\Sigma(Fn)}{2\pi}\tan\theta$, or the strain at any point is proportional to the tangent of the *direction angle* of that point.

Fig. 9 is a semi-section of the given ring drawn to scale. AB represents both the horizontal line through the center of gravity of the section, and the "neutral line" before mentioned, as their proximity prevents their separate delineation. The surface of the

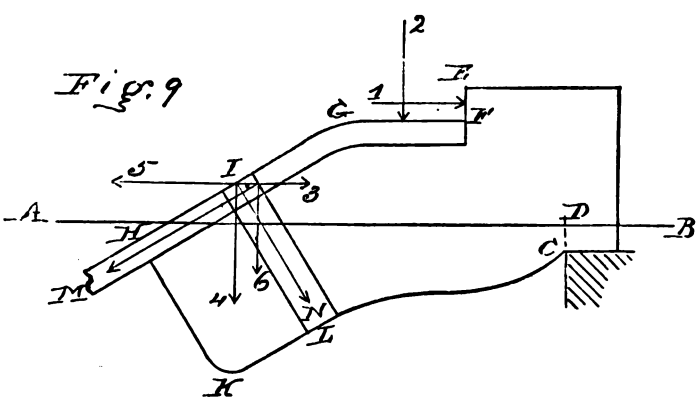

ring exposed to direct pressure is that whose outline is the irregular line, $EFGH$. The arrows (1), (2) and (N), show the positions of the resultants of the pressures on the portions EF, FG, and GH, respectively. The thin strip lying under FGH is a section of the $\frac{1}{2}''$ copper sheet, which is riveted to the ring, IL being a rivet-hole. (M) is the force applied to the upper sides of the rivets by

the tension in that sheet, and as HIG makes an angle of 30° with the horizon the total amount of force taken up by the rivets is *twice* the total downward pressure on that sheet, regarding it as perfectly flexible, which it practically is, under a heavy pressure. Now, the only thing *wanting* in the circumstances of the given ring, to make the formula deduced applicable, is the *continuity* of the rivet circle and the abutment circle, but it would seem as if the rivets in the one case, and the points of support in the other, were sufficient in number to justify the assumption that the effect is practically the same as if they were infinite in number. Force (1) is horizontal, (2) vertical; M is resolved into (5)—horizontal, and (6), vertical; N into (3), horizontal, and (4), vertical.

(1) = 11603 lbs.
(2) = 37410 "
(3) = $N \times \sin 30°$ = 32116 lbs.
(4) = $N \times \cos 30°$ = 55625 "
(5) = $M \times \cos 30°$ = 339900 "
(6) = $M \times \sin 30°$ = 196240 "

The first part of the ring to fail is that subjected to the greatest tension, and this is at the point K, because its "direction angle" with respect to AB and the center of the ring is greatest. The coördinates of this point are $x' = 33''$ and $y' = 3.25''$. Applying the formula for direct unit strain $\frac{\Sigma(F)}{2\pi A}$, we have $\Sigma(F)$ = (1) + (3) − (5) = 11603 + 32116 − 339900 = − 296181. Area A = 29.845 sq. in. $\frac{\Sigma F}{2\pi A} = \frac{-286181}{2\pi \times 28.845}$ = 1579 lbs. compression. Applying the formula for induced unit strain, $\frac{\Sigma(Fm)d}{2\pi I}$ in which m represents the lever arms of horizontal forces with respect to A B, we have Fm for (1) = − 27963; for (2) = − 25050; for (3) = 248127, and $\Sigma(Fm)$ = 248127 — (27963 +25050) = 195113, and $d = y' = 3.25$. Moment of inertia I = 54.574 and $\frac{\Sigma(Fm)\,d}{2\pi I}$ $\frac{195113 \times 3.25}{2\pi \times 54.574}$ = 1850 lbs. compression. Total compression at K = 1579 + 1850 = 3429 lbs. Applying third formula $f\frac{x'}{y'}$, $\Sigma\left(\frac{\delta A y^2}{x}\right) = \frac{\Sigma(Fn)}{2\pi}$, we have $x' = 33$, $y' = 3.25$, and $\Sigma\left(\frac{\delta A y^2}{x}\right) = 1.8143$. C is one point of the abutment circle and either it or D in AB may be taken as the center of moments for

the forces (2), (4), and (6). Fn for (2) $= 37410 \times 3\frac{1}{3} = 124700$; for (4) $= 55625 \times 6.9 = 383812$; for (6) $= 196240 \times 6.5 = 1275560$; and $\Sigma(Fn) = 1784072$. Therefore $f = \frac{3.25 \times 1784072}{2\pi \times 33 \times 1.8143} =$ 15413 lbs. tension. Diminishing this by the 3429 lbs. compression already found, the actual tensile strain at the point K, is seen to be 11984 lbs.

In conclusion, a method of calculating the quantity $\Sigma\left(\frac{\delta A y^2}{x}\right)$, which is a measure of the moment of resistance of the cross section of the ring, will be given. Call this quantity M, and in the expression for its value, replace δA by $dx\ dy$ (differential area), and Σ by the sign of double integration, and we have $M = \int\int \frac{dx}{x} y^2\ dy$. Integrating with respect to y from y_1 to y_2, regarding x as constant, we have $\int_{y_1}^{y_2} \int \frac{dx}{x} y^2\ dy = \int \frac{dx}{x} \frac{y_2^3 - y_1^3}{3} (1.)$. $\frac{dx}{x} \frac{y_2^3 - y_1^3}{3}$ is the value of M for a strip perpendicular to the axis of x, at a distance x from the axis of y, whose width is dx and whose length is $y_2 - y_1$. If the strip crosses the axis of x, y^2 or y_1 must of course be negative. Integrating this value from x_1 to x_2, we have $\frac{y_2^3 - y_1^3}{3} \int_{x_1}^{x_2} \frac{dx}{x} =$ $\frac{y_2^3 - y_1^3}{3}$ nap log $\frac{x_2}{x_1}$ (2.), which is the value of M for a rectangle whose length is $y_2 - y_1$ and whose breadth is $x_2 - x_1$. $\frac{dx}{x} y^2\ dy$ for a triangle, easily admits of integration, but the result is a very tedious one to use. When $x_2 - x_1$ is small compared with mean value of x_2 and x_1, the nap log $\frac{x_2}{x_1}$ is very nearly equal to $\frac{x_2 - x_1}{\frac{1}{2}(x_2 + x_1}$. Even when $x_2 - x_1$ is $\frac{1}{10}$ of $\frac{1}{2}(x_2 + x_1)$ the error is less than one per cent. Let $x_2 - x_1 = b$ (breadth) and the arithmetical mean of x_2 and x_1, $\left(\frac{x_2 + x_1}{2}\right), = r$, and substitute in (2.), and we have $M = \frac{y_2^3 - y}{3} \times \frac{b}{r}$ (3.), which when b is lses than $\frac{1}{10} r$ is quite accurate enough and much simpler than (2.). Portions of the cross section other than rectangles, should be divided into strips of moderate breadth, parallel to either axis, and mean values of y_2 and y_1 used. For incidental portions of small area, take coördin-

ates of the center of gravity and use the formula $M = \frac{\text{Area} \times y^2}{x}$ or $\frac{\text{Area} \times y^2}{r}$ (4.) It will be noticed that in both (3.) and (4.) the value of M is equal to the moment of inertia of the area divided by r; so that when M and the moment of inertia are calculated with respect to practically the same axis, the calculation of the former incidentally involves the determination of the latter, without any extra computation.

CCCXIII.

ON THE USE OF COMPOUND ENGINES FOR MANUFACTURING PURPOSES, THE RELATIVE AREAS OF THE CYLINDERS, AND THE REGULATION OF PRESSURE IN RECEIVER.

BY CHAS. T. MAIN, LAWRENCE, MASS.
(Member of the Society.)

I. As quite a number of compound engines have been already introduced, and are running for manufacturing purposes, and as a great many more must be introduced if manufacturers are to keep anywhere near the leaders in steam engineering practice, it seems as though we should try to determine in a more definite way than has heretofore been presented, the conditions which are proper for the employment of the three types of engine, the High Pressure, Condensing and Compound.

If steam is to be used for power exclusively, the compound engine of proper design, in its common form, is now admitted by nearly all to be the most economical, especially if considered simply with reference to the efficiency of the steam, without considering the efficiency of the mechanism, and the increased cost of the plant over other types.

If more or less low pressure steam is required for other purposes than power, this type in a special form can be used to advantage except in such cases as require nearly or quite the same amount of low pressure steam as would be exhausted from an engine producing the amount of power required. Such a condition as this might exist where small amounts of power and large amounts of low pressure steam are required, as in a dye-house or printery, or in case a portion of the power is produced from water and the other portion from steam, the power of the latter being such as to supply the required amount of exhaust steam for the various purposes to which it is put.

In such cases as these it would be absurd to add a condensing cylinder to the engine, and then supply the low pressure steam

direct from the boilers through reducing valves. The proper type to use here would be the simple high pressure engine for ordinary pressure, say up to 100 lbs. per sq. in. above the atmosphere.

Between these two extremes, of steam used for power only, and an amount of low pressure steam used equivalent to the whole amount exhausted from the engine, lie nearly all the cases of ordinary practice.

Let us see if we can determine which type is proper to use if a certain proportion of the steam from the engine can be used for heating purposes.

As we have no records of experiments extensive enough to solve this problem, we must make certain assumptions which are based upon experiment and practice, and from these assumptions deduce our results.

Let us assume a plant of 1,000 I. H. P., the engine for each case being a pair of tandem compounds, a pair of single cylinder condensing, and a pair of non-condensing engines. The results worked out would be about the same for a single engine of each kind, 500 H. P., except that the condensing engine could run only as full condensing or one-half condensing.

The items of cost for running such plants are fuel, attendance of engines and boilers, oil, waste and supplies, depreciation, repairs, interest, taxation and insurance.

The fuel consumption per indicated horse-power per hour is shown in the following table. The total consumption per I. H. P. per hour is the total amount burned, and is the amount to be charged to power if no exhaust steam is used for heating purposes. The net consumption per I. H. P. per hour is the amount to be charged to power after deducting a weight equivalent to the amount of exhaust steam used for heating purposes.

The conditions for running are assumed as follows:—The compound engine is to run with 100 lbs. initial pressure above the atmosphere, the receiver pressure to be 5 lbs. The condensing engine to have an initial pressure of 80 lbs., and if a portion is run high pressure, that portion is to exhaust against 5 lbs. back pressure. The high pressure engine to run with an initial pressure of 100 lbs., and to exhaust against a back pressure of 5 lbs. All pressures here given will be above the atmosphere unless otherwise specified. The temperature of feed water is taken at 100° Fahr.

The coal consumption per I. H. P. per hour, when the engines

are running with steam used for power only, are taken as $1\frac{3}{4}$ lbs for the compound, $2\frac{1}{2}$ lbs. for the condensing, and 3 lbs. for the high pressure engines, and these figures will be conceded by engineers in general to be fair values to work with for the best constructed engines and boilers for each type.

TABLE I.

SHOWING GROSS AND NET COAL CONSUMPTION IN LBS. PER INDICATED HORSE POWER PER HOUR.

Column 1.	2	3	4	5	6	7	8
ENGINE.	COMPOUND.		CONDENSING.			HIGH PRESSURE.	
Per cent. of Exhaust Steam used for Heating Purposes.	Lbs. of Coal per I. H. P. per hour, all coal charged to power.	Lbs. of coal per I. H. P. per hour, deducting amount equivalent to exhaust steam used.	Lbs. of coal per I. H. P. per hour, all coal charged to power.	Lbs. of coal per I. H. P. per hour, deducting amount equivalent to exhaust steam used.	Do.	Lbs. of coal per I. H. P. per hour, all coal charged to power.	Lbs. of coal per I. H. P. per hour, deducting amount equivalent to exhaust steam used.
0	1.75	1.75	2.50	Full Cond'g 2.50		3.00	3.00
10	1.88	1.65	2.55		Full Cond'g 2.62		2.78
20	2.00	1.55	2.60	$\frac{3}{4}$ Cond'g 2.06	2.40		2.55
25	2.06	1.50	2.63		2.17		2.44
30	2.13	1.45	2.65		$\frac{3}{4}$ Cond'g 2.19		2 33
40	2.25	1.35	2.70	$\frac{1}{2}$ Cond'g 1.63	2.08		2.10
50	2.38	1.25	2.75		1.85		1.88
60	2.50	1.15	2.80		1.75		1.65
70	2.63	1.05	2.85	$\frac{1}{4}$ Cond'g 1.19	$\frac{1}{2}$ Cond'g 1.53		1 43
75	2.69	1.00	2.88		1.30	Constant.	1.31
80	2.75	.95	2.90	Full High Pres. 0.75	1.31		1.20
90	2.88	.85	2.95		1.20		.98
100	3.00	.75	3.00		Full High Pres. .98		.75
					.75		

Columns 3, 5, 6 and 8 are shown graphically on Fig. 11, page 52.

Explanation of Table I.

When steam is used for power only, the coal consumption is shown at the head of each column.

In Col. 2 is given the gross consumption per I. H. P. for the compound engine which is found thus: Supposing 10% of the steam exhausted from the high pressure cylinder is taken from the receiver, then 90% of the whole steam admitted to high pressure cylinder will be used as in a regular compound, and 10% of the

steam admitted will be used as in a high pressure engine, and the total consumption will be

$$\begin{array}{l} 1.75 \times .9 = 1.575 \\ 3.00 \times 1. \times \ \ .3 \\ \hline \qquad\qquad\quad 1.875 \text{ say } 1.88 \text{ lbs.,} \end{array}$$

and so on for each per cent. taken from receiver.

Col. 4 is obtained in a similar way to Col. 2.

In Col. 3 is given the net weight to charge to power. For the compound engine it is obtained thus: Starting at 100° temperature of feed the amount of heat necessary to make one lb. of steam at 100 lbs. will be 1,117 thermal units.

The amount of heat necessary to produce one pound of steam at 5 lbs. pressure from 100° Fahr. is 1,083 thermal units.

The amount of heat to charge to power if the steam is admitted at 100 lbs. pressure, and exhausted and used at 5 lbs. pressure will be 1,117 − 1,083 = 34 T. U. per lb. of steam, or 34 ÷ 1,117 = .0307 of the total amount admitted.

Besides the change of about 3%, due to the difference in pressure at the beginning and end of stroke, we must consider the effect of cylinder condensation, and condensation in the jackets. These are very indefinite quantities, and will seriously affect the amount of coal to be charged to power. The difference in the amount of condensation by passing the steam through an engine, or passing it through pressure regulators and pipes, should be charged to the power. Let us assume that 20% of the steam apparently evaporated passes from each cylinder in the form of water, and that 5% of the total weight of steam used is condensed in the jackets, making a total loss by condensation of 25%. This added to 3%, the amount of heat due to the difference in pressures, makes a total loss of 28%. If we call the loss by condensation in pipes and passing by through regulators 3%, we shall have a difference or net charge of 25% to make to the engine or to power.

If these assumptions are not exactly correct, it will make no serious error in the *comparative* results to follow. For when we consider the steam as used for power only, the coal per I. H. P. per hour, 1¾, 2½ and 3 lbs., includes all losses of whatever sort, and when we get to 100% of exhaust steam used for heating purposes, the compound and condensing engines then become high pressure non-condensing engines, and our results here for coal consumption

and everything based on coal consumption, must be the same, and although the *actual* results may vary somewhat with different allowances for condensation, the *relative* results which we are after principally cannot be far from correct.

We get then the amount of steam to charge to power for the compound engine, 10% being taken from the receiver, thus

$$\begin{aligned} 1.75 \times .9 &= 1.575 \\ 3.00 \times 25 \times .1 &= .075 \\ \hline & 1.650 \text{ lbs.,} \end{aligned}$$

and so on for each per cent. taken from the receiver.

Cols. 3, 5, 6 and 8 are obtained in a similar way.

Table I. and the straight lines in Fig. 11 show the coal consumption per I H. P. per hour when certain per cents of exhaust steam are used for heating purposes, but as the amount of coal per H. P. varies in the three types, so must the amount of steam admitted

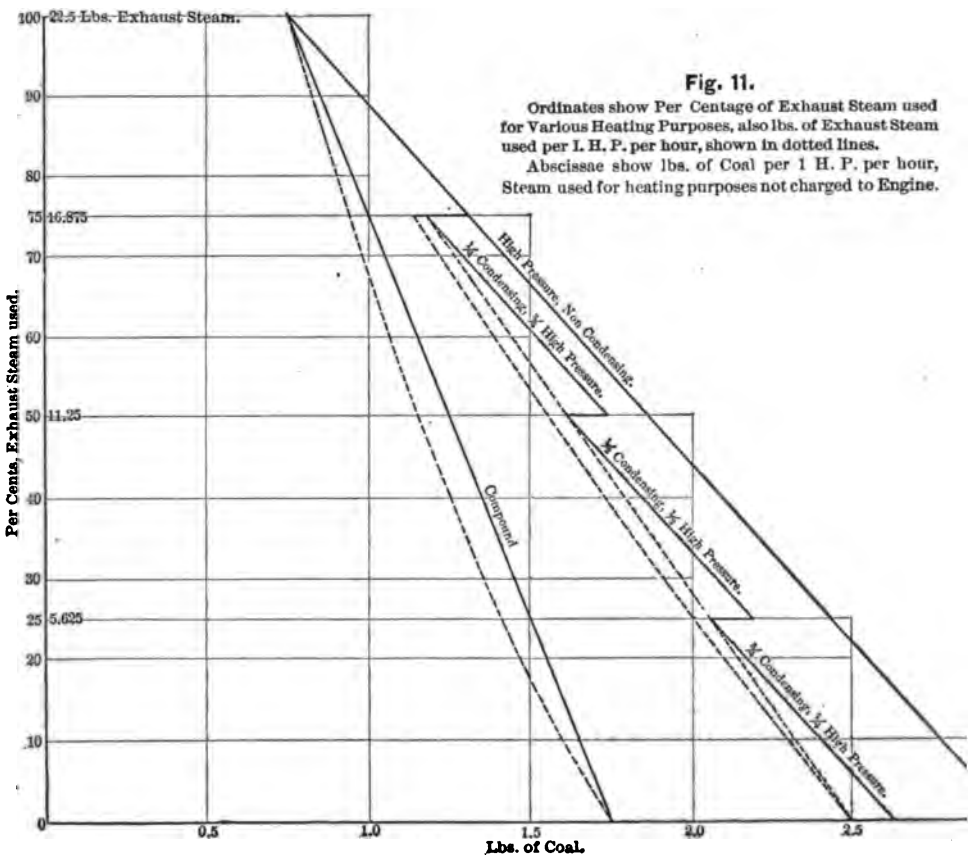

Fig. 11.

Ordinates show Per Centage of Exhaust Steam used for Various Heating Purposes, also lbs. of Exhaust Steam used per I. H. P. per hour, shown in dotted lines.

Abscissae show lbs. of Coal per 1 H. P. per hour, Steam used for heating purposes not charged to Engine.

and exhausted vary, and thus the corresponding per cents of exhaust steam used from each engine are not equal quantities. If we had a case in hand of a certain amount of low pressure steam required, to find the proper engine to use we should have to deal with uniform *weights* of exhaust steam instead of *per cents*, and the curved dotted lines on Fig. 11 show the pounds of coal consumed per I. H. P. per hour when certain weights of exhaust steam are used for heating purposes. One pound of coal is here reckoned as equivalent to 10 lbs of water evaporated and $(10 \times .75 =)$ 7.5 lbs. of steam exhausted.

If it is necessary to make steam for other purposes than power, and if this steam can be passed through the engine before being used for other purposes, then all the expense that should be charged to power is the weights of coal which we have in columns 3, 5, 6 and 8, table I., a portion of the attendance on boilers and a portion of the cost of boiler plant for depreciation, repairs, interest, taxation and insurance, this portion being in the same ratio to the full cost of attendance and depreciation, repairs, etc., of the boiler plant as the weight of coal charged to the engine is to the gross weight consumed. To this add the full cost of attendance of engine, full cost of oil, waste and supplies for engine, and full cost of engine plant for depreciation, repairs, etc.

This is shown in Tables II., III., IV. and V., and graphically in Fig. 12.

TABLE II. Showing ordinary Running Daily and Yearly Expenses.

Col. 1	2	3	4	5	6	7	8	9	10	11	12	13	14	15	16	17	18	19	20	21	22
Per cent. of exhaust steam used.	Lbs. coal per I.H.P. per hour.			Cost of coal per I.H.P. per day of 10½ hours @ $5.00 per long ton—2240 lbs.			Attendance of Boilers per I.H.P. per day.			Attendance of Engine per I.H.P. per day.			Oil, Waste & Supplies per I.H.P. per day.			Total Daily Expense.			Total Yearly Expense —308 days.		
	Compound.	Condens'g.	High Press.	Compound.	Condens'g.	H. P.	Compound.	Condens'g.	H. P.	Compound.	Condens'g.	H. P.	Compound.	Condens'g.	H. P.	Compound.	Condens'g.	H. P.	Compound.	Condens'g.	H. P.
				c.	c.	c.	c.	c.	c.	c.	c.	c.	c.	c.	c.	c.	c.	c.	$	$	$
0	1.75	2.50 2.62	3.00	4.00	5.72 5.99	6.86	0.53	0.75 0.79	0.90	0.60	0 40	0.35	0.25	0.22	0.20	5.38	7.09 7.40	8.31	16.570	21.837 22.792	25.595
25	1.50	2.06 2.18	2.44	3.43	4.71 4.99	5.58	.45	.62 .66	.73	.60	.40	.35	.25	.22	.20	4.73	5.95 6.27	6.86	14.568	18.326 19.311	21.129
50	1.25	1.63 1.75	1.88	2.86	3.73 4.00	4.30	.38	.49 .53	.56	.60	.40	.35	.25	.22	.20	4.09	4.84 5.15	5.41	12.597	14.907 15.862	16.663
75	1.00	1.19 1.31	1.31	2.29	2.72 3.00	3.00	.30	.36 .39	.39	.60	.40	.35	.25	.22	.20	3.43	3.72 4.01	3.94	10.564	11.458 12.351	12.135
100	.75	.75	.75	1.72	1.72	1.72	.23	.23	.23	.60	.40	.35	.25	.22	.20	2.80	2.57	2.50	8.624	7,916	7.700

TABLE III. Same as Table II. except that weights of exhaust steam are used instead of per cents.

Lbs. of ex-steam used per I.H.P. per hour.																					
0	1.75	2.50	3.00	4.00	5.72	6.86	0.53	0.75	0.90	0.60	0.40	0.35	0.25	0.22	0.20	5.38	7.09	8.31	16,570	21,837	25,595
5.625	1.40	2.00	2.44	3.20	4.58	5.58	.42	.60	.73	.60	.40	.35	25	.22	.20	4.47	5.80	6.86	13,768	17,864	21,129
11.25	1.15	1.55	1.88	2.63	3.55	4.30	.35	.47	.56	.60	.40	.35	.25	.22	.20	3.83	4.64	5.41	11,796	14,391	16.663
16.875	.98	1.15	1.31	2.13	2.63	3.00	.28	.35	.39	.60	.40	.35	.25	.22	.20	3.26	3.60	3.94	10,041	11,088	12,315
22.5	.75	.75	.75	1.72	1.72	1.72	.23	.23	.23	.60	.40	.35	.25	.22	.20	2.80	2.57	2.50	8,624	7,916	7,700

These tables show the running expense independent of the first cost and maintenance of plant.
The double figures for condensing engine are arrived at as follows (see also Tables I. and IV.):

No exhaust steam used..... } Full condensing.
} ¼ "
25% " " ..... } ⅓ "
} ½ "

50% exhaust steam used..... } ½ condensing.
} ¼ "
75% " " ..... } ¼ "
100 " " ..... } Full high pressure.

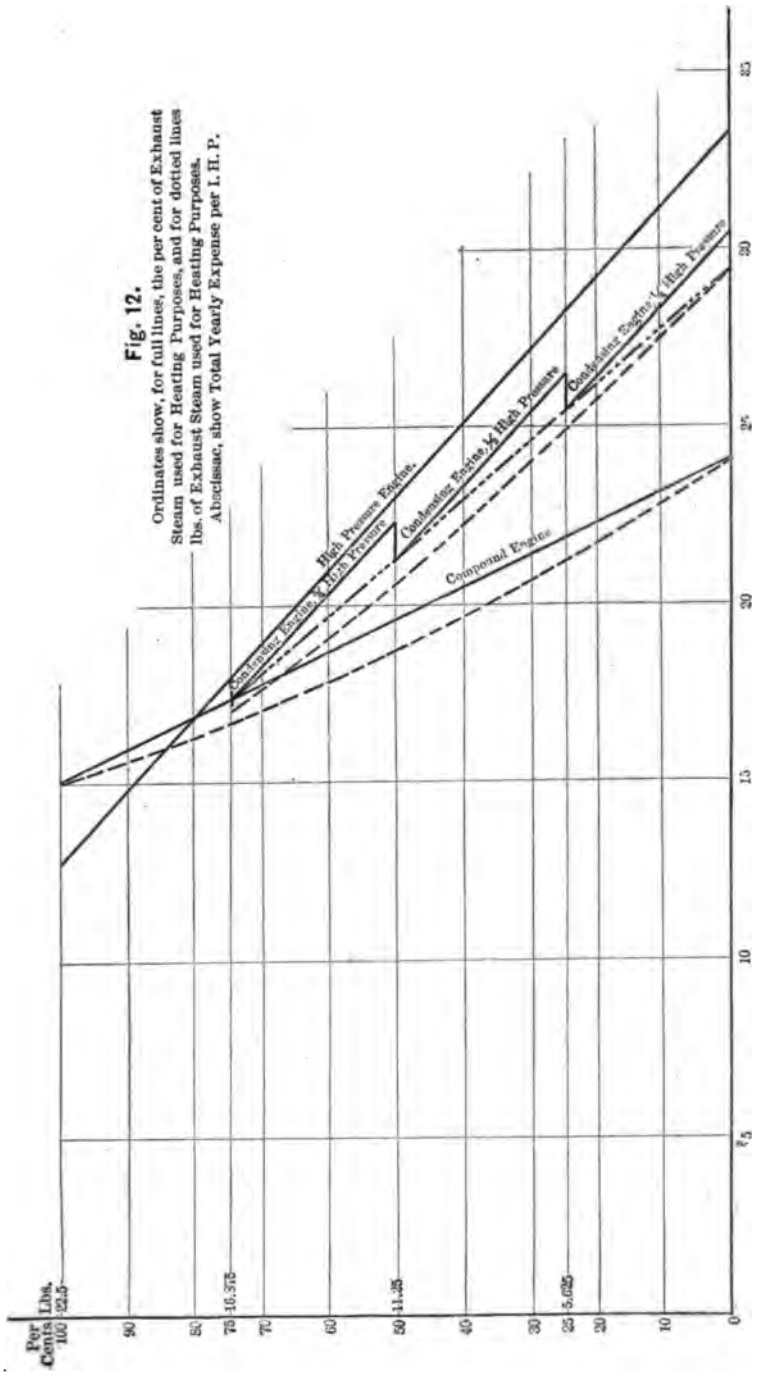

Fig. 12.

Ordinates show, for full lines, the per cent of Exhaust Steam used for Heating Purposes, and for dotted lines lbs. of Exhaust Steam used for Heating Purposes.

Abscissae, show Total Yearly Expense per I. H. P.

TABLE IV.—SHOWING COST OF PLANT PER I. H. P. TO CHARGE TO POWER. ALSO DEPRECIATION, REPAIRS, INTEREST, TAXATION, AND INSURANCE PER I. H. P. PER YEAR. ALSO TOTAL YEARLY EXPENSE PER I. H. P.

Col. 1	2	3	4	5	6	7	8	9	10	11	12	13	14	15	16	17	18	19	20	21	22	23	24
Engine.	Per cent. of Exhaust Steam used.	Engine and Piping Complete.	Engine House.	Engine Foundations.	Total Cost of Engine Plant.	Depreciation at 4 % on Total Cost.	Repairs @ 2 % on Total Cost.	Interest @ 5 % on Total Cost.	Taxation @ 1.5 % on ⅔ Cost.	Insurance @ 0.5 % on Engine and Engine House.	Totals of Cols. 7, 8, 9, 10, and 11.	Boilers Complete, including Feed Pumps, etc.	Boiler House.	Chimney and Flues.	Total Cost of Boiler Plant.	Depreciation @ 5 % on Total Cost.	Repairs @ 2 % on Total Cost.	Interest @ 5 % on Total Cost.	Taxation @ 1½ % on ⅔ Cost.	Insurance at 0.5 % on Total Cost.	Totals of Cols. 17, 18, 19, 20, and 21.	Total Ordinary Running Expense Cols. 20, 21, and 22, Table II.	Total Yearly Expense per I. H. P. Cols. 12 + 22 + 23.
		$	$	$	$	$	$	$	$	$	$	$	$	$	$	$	$	$	$	$	$	$	$
Compound.	0	25.00	8.00	7.00	40.00	1.60	0.80	2.00	0.45	0.165	5.015	9.33	2.92	6.11	18.36	0.918	0.367	0.918	0.207	0.092	2.502	16.570	24.087
	25	Constant.	"	"	"	"	"	"	"	"	"	8.00	2.50	5.66	16.16	.808	.323	.808	.182	.081	2.202	14.568	21.785
	50											6.67	2.08	5.15	13.90	.695	.278	.695	.156	.070	1.894	12.597	19.506
	75											5.33	1.67	4.60	11.60	.580	.232	.580	.131	.058	1.581	10.564	17.160
	100											4.00	1.25	4.00	9.25	.463	.185	.463	.104	.046	1.261	8.624	14.900
Condensing.	0	20.00	7.50	5.50	33.00	1.32	0.66	1.65	0.371	0.138	4.139	13.33	4.17	7.30	24.80	1.240	.496	1.240	.279	.124	3.379	21.837	29.355
												13.97	4.37	7.46	25.80	1.290	.516	1.290	.290	.129	3.515	22.792	30.446
	50	20.00	7.50	5.50	33.00	1.32	0.66	1.65	.371	.138	4.139	10.99	3.43	6.70	21.12	1.056	.422	1.056	.238	.106	2.878	18.326	25.343
												11.62	3.63	6.84	22.09	1.106	.442	1.105	.248	.111	3.013	19.311	26.463
	25	19.00	7.50	5.00	31.00	1.26	0.63	1.575	.354	.133	3.952	8.69	2.72	5.92	17.33	.867	.347	.867	.195	.086	2.362	14.907	21.221
												9.33	2.92	6.11	18.36	.918	.367	.918	.207	.092	2.502	15.862	22.316
	75	19.00	7.50	5.00	31.00	1.26	0.63	1.575	.354	.133	3.952	6.35	1.98	4.92	13.25	.663	.265	.663	.149	.066	1.806	11.458	17.216
												6.99	2.18	5.15	14.32	.716	.286	.716	.161	.072	1.951	12.351	18.254
	100	*																					
Non-Condensing.	0	17.50	7.50	4.50	29.50	1.18	0.59	1.475	0.332	0.125	3.702	16.00	5.00	8.00	29.00	1.450	.580	1.450	.326	.145	3.951	25.595	33.243
	50	Constant.	"	"	"	"	"	"	"	"	"	13.01	4.07	7.20	24.28	1.214	.486	1.214	.273	.121	3.308	21.129	28.139
	25											10.03	3.13	6.30	19.46	.973	.392	.973	.219	.097	2.654	16.663	23.019
	75											6.99	2.18	5.30	14.47	.724	.289	.724	.163	.072	1.972	12.185	17.859
	100											4.00	1.25	4.00	9.25	.463	.185	.463	.104	.046	1.261	7.700	12.663

* The condensing engine at 100 % of exhaust steam used becomes a non-condensing engine.

TABLE V.

SAME AS TABLE IV. EXCEPT THAT WEIGHTS OF EXHAUST STEAM ARE USED INSTEAD OF PER CENTS.

1	2	3	4	5	6	7	8	9	10	11	12	13	14	15	16	17	18	19	20	21	22	23	24
Engine.	Weight of exhaust steam used per 1 H. P. per hour.	Engine and piping complete.	Engine-house.	Engine foundations.	Total cost of engine plant.	Depreciation @ 4 % on total cost.	Repairs @ 2 % on total cost.	Interest at 5 % on total cost.	Taxation at 1.5 % on ½ cost.	Insurance @ 0.5 % on engine and engine-house.	Totals of cols. 7, 8, 9, 10 and 11.	Boilers complete, including feed pumps, etc.	Boiler-house.	Chimney and flues.	Total cost of boiler plant.	Depreciation @ 5 % on total cost.	Repairs @ 2 % on total cost.	Interest @ 5 % on total cost.	Taxation @ 1.5 % on ½ cost.	Insurance @ 0.5 % on total cost.	Totals of cols. 17, 18, 19, 20, and 21.	Total ordinary running expenses—cols. 20, 21 and 22.—Table IV.	Total yearly expense per I. H. P. Cols. 12 + 22 + 23.
Compound.	0	$25.00	$8.00	$7.00	$40.00	$1.60	$0.80	$2.00	$0.45	$0.165	$5.015	$9.33	$2.92	$6.11	$18.36	$0.918	$0.367	$0.918	$0.207	$0.092	$2.502	$16.570	$24.087
	5.625											7.47	2.33	5.50	15.30	.865	.316	.865	.172	.087	2.305	13.768	21.088
	11.25											6.13	1.92	4.96	13.01	.651	.260	.651	.146	.065	1.773	11.796	18.584
	16.875	Constant.	"	"	"	"	"	"	"	"	"	4.96	1.55	4.46	10.97	.549	.219	.549	.123	.055	1.495	10.041	16.551
	22.50											4.00	1.25	4.00	9.25	.463	.185	.463	.104	.046	1.261	8.624	14.900
Condensing.	0	20.00	7.50	5.50	33.00	1.32	0.66	1.65	0.371	0.138	4.139	13.33	4.17	7.30	24.80	1.240	.496	1.240	.279	.124	3.379	21.887	29.355
	5.625	20.00	7.50	5.50	33.00	1.32	0.66	1.65	0.371	0.138	4.139	10.67	3.33	6.57	20.57	1.029	.410	1.029	.231	.103	2.802	17.864	24.805
	11.25	19.00	7.50	5.00	31.50	1.26	0.63	1.575	0.354	0.133	3.952	8.27	2.58	5.78	16.63	.832	.333	.832	.187	.083	2.267	14.391	20.610
	16.875	19.00	7.50	5.00	31.50	1.26	0.63	1.575	0.354	0.133	3.952	6.13	1.92	4.96	13.01	.651	.260	.651	.146	.065	1.773	11.088	16.813
	22.50																						
Non condensing.	0	17.50	7.50	4.50	29.50	1.18	0.59	1.475	0.332	0.125	3.702	16.00	5.00	8.00	29.00	1.45	.580	1.450	.326	.145	3.951	25.595	33.248
	5.625											13.01	4.07	7.20	24.28	1.214	.486	1.214	.273	.121	3.308	21.129	28.139
	11.25											10.03	3.13	6.30	19.46	.973	.392	.973	.219	.097	2.654	16.663	23.019
	16.875	Constant.	"	"	"	"	"	"	"	"	"	6.99	2.18	5.30	14.47	.724	.289	.724	.163	.072	1.972	12.185	17.859
	22.50											4.00	1.25	4.00	9.25	.463	.185	.463	.104	.046	1.261	7.700	12.653

The conclusions to be drawn from the diagrams and tables are that if an amount of exhaust steam can be constantly used up to about 80 to 85 per cent. of the whole amount exhausted from a high pressure engine, the most economical plant to put in would be a special form of compound engine; but if more than 80 to 85% of the exhaust could be used for heating purposes, then the proper type would be the high-pressure non-condensing. The condensing engine, running with a portion high-pressure, comes between the compound and non-condensing in running expense below 75 per cent. of the amount of exhaust steam used, and above 75 per cent. used it becomes a regular non-condensing engine.

If the amount of exhaust steam used were a variable, but averaged more than would allow for equal cylinder on a compound engine, the proper type of engine to use would still be the non-condensing. If the average of the variable amount fell below that amount which would allow for equal cylinders on a compound, then the proper type to use would be the compound engine. (For these amounts see later on.)

There is one advantage of the compound over the non-condensing with variable amounts of exhaust steam used, viz.: The low pressure cylinder, being arranged for a variable cut-off, can control the variation, thus making use of all the steam, decreasing the amount used in the high pressure cylinder and preventing any wasteful and unpleasant blowing-off of exhaust steam.

The *practical* limit of the average proportion of exhaust steam which can be used and still employ the compound system, when the quantity required is variable, is when that proportion requires equal cylinders on the compound engine, and this limit is established by the ability to control the steam exhausted from the high pressure cylinder.

I would like, however, to reproduce right here two indicator cards (Fig. 13), which were taken from the compound engine at the Lower Pacific Mills, with the 44 inch cylinder running high pressure and the 32 cylinder low pressure. 17 per cent. of the steam exhausted from the 44 inch cylinder being taken into the 32 inch, and 83 per cent. was taken from the receiver for various heating purposes. Similar cards to these have been taken day after day from the engine. These cards show an extreme case of this method of running. It is not intended to be the regular way, but under the conditions then existing, it was the most economical way to run.

II. Relative Areas of Cylinders.

When steam is taken from the receiver for other purposes than power, those purposes to which it is put will determine the average pressure which should be maintained in the receiver, and the average quantity of steam which shall pass into the low pressure cylinder.

It will thus be seen that the most economical pressure in the

Fig. 12.

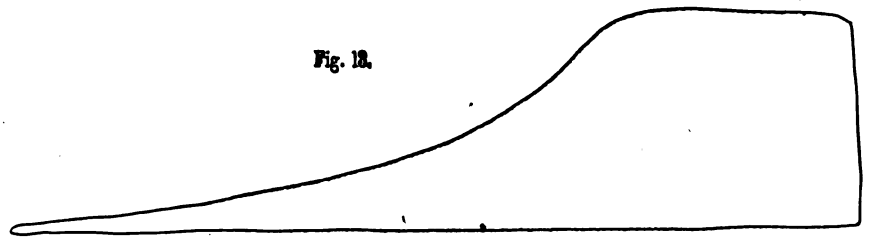

Crank End- 44 inch Cylinder.

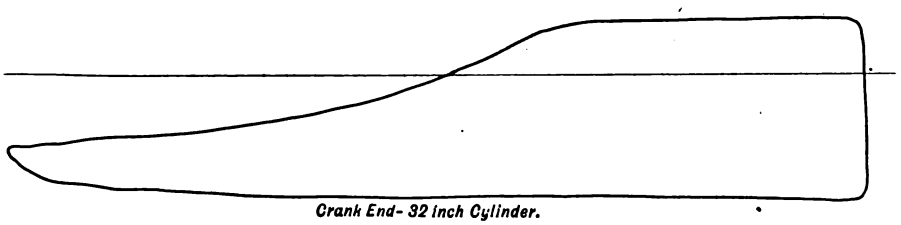

Crank End- 32 inch Cylinder.

receiver cannot be considered to any extent nor the equalization of power in the two cylinders, and that the best form mechanically for an engine for this kind of work is a pair of tandem engines, although there is more care and trouble running the tandem than with the cross-compound.

The size of the low pressure cylinder as compared with the high pressure will depend then upon the average portion of steam exhausted from the high pressure cylinder which is to go into the low pressure cylinder, the pressure at which it enters the high pressure cylinder, and upon the pressure at which it is to go into

the low pressure cylinder. All of these conditions are variable within certain limits, and an average must be determined as nearly as possible for each.

To arrive at the proper proportions of the cylinders, we must first consider an engine where no steam is used for other purposes than power, and determine the proper ratio of areas of cylinders for different receiver pressures.

A very large number of the high duty pumping engines of the compound type have relative areas of cylinders of about 1 to 4 for about 100 pounds boiler pressure, and this proportion has been adopted by some of the builders as proper when steam is used for power only. The double compound marine engines which gave very economical results, when not compared with the triple compounds, have a ratio of areas of cylinders of about 1 to 4 for 90 pounds boiler pressure, but these engines usually carry a higher receiver pressure than would be required when steam is taken from the receiver for other purposes than power.

Some of these engines whose ratios are 1 to 4 have given remarkable economic results, and so also have those of smaller ratios, and there is probably not very much difference in the economy to be obtained between engines whose ratios of areas of cylinders are anywhere between 1 to 3 and 1 to 4 with ordinary receiver and boiler pressures. There is a difference, however, in the cost of the engines, those with the smaller ratios being less expensive than those of higher ratios, and thus the charge for interest on plant and depreciation of same is less for smaller ratios.

TABLE VI.

SHOWING DIMENSIONS OF COMPOUND ENGINES USED FOR MANUFACTURING PURPOSES.

Location.	Designer or Builder.	Diam. of Cyls. in Ins.		Length of Stroke in Inches.	Relative Areas of Cylinders.	Lbs. Water per I. H. P. per hour.	Lbs. coal per H. P. per hour.	Uses to which Steam is put.
		High Pressure.	Low Pressure.					
Plymouth Cordage Co..	Corliss.....	30	60	72	1 to 4			Power only
Sewell and Day.....	Reynolds.....	22	44	60	1 " 4			" "
Globe Yarn Mills.....	Wetherill	24	48	60	1 " 4			" "
Dyerville Manf'g Co...	W. A. Harris.	16	32	48	1 " 4			Power, Heating Mills and Slashing
Amoskeag " " ...	Wright.....	30	56	48	1 " 3.48			Power only
Wetamoe Mills.....	Wetherill.....	26	48	60	1 " 3 41	16.28		" "
Atlantic Delaine.....	Corliss.....	24	44	72	1 " 3.36		1.69	Power and Heating Mills.
Ann & Hope Mills. ...	"	22	40	60	1 " 3.31			Power, Heating Mills and Slashing,
Nourse Mill	"	20	56	72	1 " 3.24		1.63	do
Bristol Cotton Mill. . .	Reynolds.....	18	32	48	1 " 3.16			do
Lower Pacific Mills....	Corliss.....	32	44	72	1 " 1.89			Power, Heating Mills, Slashing, Wool Washing and Dyeing.
* Province of Naples...	Sulzer Bros..	21.62	40.1	4'.11 1/16	1.344	14.073 14.586	1.478 1.566	Power only probably
" " "	"	24	40.	4'.11 1/16	1.278	12.68 14.81	1.436 1.52	" " "
Faromer, Bohemia.....	Bromorsky & Schultze ...	25	43.	4'.1 5/8	1.296	15.774		" " "
Mossley, near Manchester, England	Goodfellow & Matthews..	24	52.	6'.0	1.429	18.84	1.87	" " "

Those engines in the above table which have been tested have shown excellent results.

The test of the engine at the Wetamoe Mills, Fall River, by Mr. Barrus, made on an engine with unjacketed cylinders, gave 16.28 lbs. of water per hour for the running time, and this based on the stipulated evaporation of 10 lbs. of water per lb. of coal would be 1.63 lbs. of coal per I. H. P. per hour. The boiler pressure was about 94.5 lbs., and the receiver pressure about 6.7 lbs. in this test.

The test on the Nourse Mill engine by Mr. Henthorn, showed the remarkable result of 1.63 lbs coal per I. H. P. per hour, including all coal or wood used for starting and banking fires for a week's run.

The test lately made at the Atlantic Delaine Mills showed also

* For details of last four engines, see "London Engineering," July 20, 1888, Mechanics, August number.

remarkable results of 1.69 lbs. coal per I. H. P. per hour, including all fuel used for a week's run. The average boiler pressure was 117 lbs.

These last two engines were evident'y designed on the basis of 1 to 4 as the proper ratio of areas of cylinders when no steam is taken from receiver except for power. But when tested they were run as regular compound engines, no steam taken from the receiver for heating purposes, and gave the excellent results mentioned with much smaller ratios than 1 to 4. The tests made on the two engines built by Messrs. Sulzer Bros. were 10 days duration. Of the two sets of figures given in the table, the upper ones are exclusive and the lower ones are inclusive of getting up steam. Boiler pressure not given in report of tests.

With a regular compound engine the cards from high and low pressure cylinder will be continually changing with reference to each other. How much more then will be the variation when steam is taken from the receiver for other purposes than power. A variation of ratio of equivalent relative volumes between 1 to 3 and 1 to 4 would be slight in an engine of this sort.

Considering, then, the above facts, 1st, that the high duty pumping engines and marine engines for a continuously uniform load, have ratio of areas of about 1 to 4 for 90 to 100 lbs. boiler pressure; 2d, that the engines which are used for manufacturing, which have been tested with such good results, average 1 to 3.41 with boiler pressure from 95 to 120 lbs.; 3d, that the above all run or did run in the tests as regular compounds; 4th, that when steam is taken from the receiver for other purposes than power, that the equivalent ratio of areas will change considerably in the same engine for different amounts of steam taken from the receiver; it would seem that the proper ratio of areas for a mean pressure in receiver, and about 100 lbs. boiler pressure, is not far from 1 to 3½. For, having an average equivalent ratio of 1 to 3 5, there can be considerable variation on either side before getting beyond the limits of economy.

If 1 to 3 were established as an average ratio, and the power required should be considerably more, or the exhaust steam required considerably less than the usual amount, we should then have an equivalent ratio of much less than 1 to 3 with small ratio of expansion in low pressure cylinder. On the other hand, if 1 to 4 is established as the proper average, if considerably less power or considerably more exhaust steam is required than usual, the equivalent ratio would be much greater than 1 to 4, and thus we should have

a large cylinder at larger cost with small amount of power obtained, and possibly a loss of economy with too great expansion in low pressure cylinder.

All things considered, then, I would set the proper equivalent ratio of areas of cylinders, as shown in the following table:

RATIOS OF AREAS OF CYLINDERS.

Receiver Pressure.	Boiler Pressure.	
	100 lbs.	125 lbs.
5 lbs.	1 to 3.50	1 to 4.00
10 lbs.	1 to 3.75	1 to 4.25
15 lbs.	1 to 4.00	1 to 4.50

For boiler pressures above 125 lbs. the triple expansion engine should be used to get the full benefit of the higher pressures.

With such pressure and proportions as these we get the best results in distribution of power and steam when no steam is taken from receiver for heating purposes, and of steam without regard to power when steam is used from the receiver for other purposes than power.

Having determined as nearly as possible the approximate correct proportions for an engine where no steam is taken from the receiver for other purposes than power, or what is the same thing, the equivalent ratio for such portion of the steam as passes through the low pressure cylinder, it is only necessary to multiply that ratio by the per cent. of steam going into low pressure cylinder after such quantities are taken from the receiver as are required for heating purposes, to obtain the ratio of areas when any per cent. is taken from the receiver. Thus, if 25% of steam is taken out from the receiver, the average pressure of which is 5 lbs., the proper ratio of areas of cylinder would be $3.5 \times .75 = 2.625$ for 100 lbs. boiler pressure. This is shown graphically in Fig. 14:

The tendency now that several makers are competing on this type of engine will be to produce the smallest engine possible to do the work, and thus to reduce the ratio of areas of cylinders to a smaller amount than is proper for economy. They will very rarely err on the large side.

The purposes to which exhaust steam is put sometimes require

a very nearly constant quantity, but in most cases the quantity required is quite variable. For instance, the slashers in a cotton mill require very nearly constant supply of low pressure steam. Dye-houses require an extremely variable amount during the day, and a variable amount usually for different days in the week. Warming the buildings require a daily, also a monthly variation in amount of steam required.

In designing an engine, from the receiver of which, between the high and low pressure cylinders, steam is to be taken for various

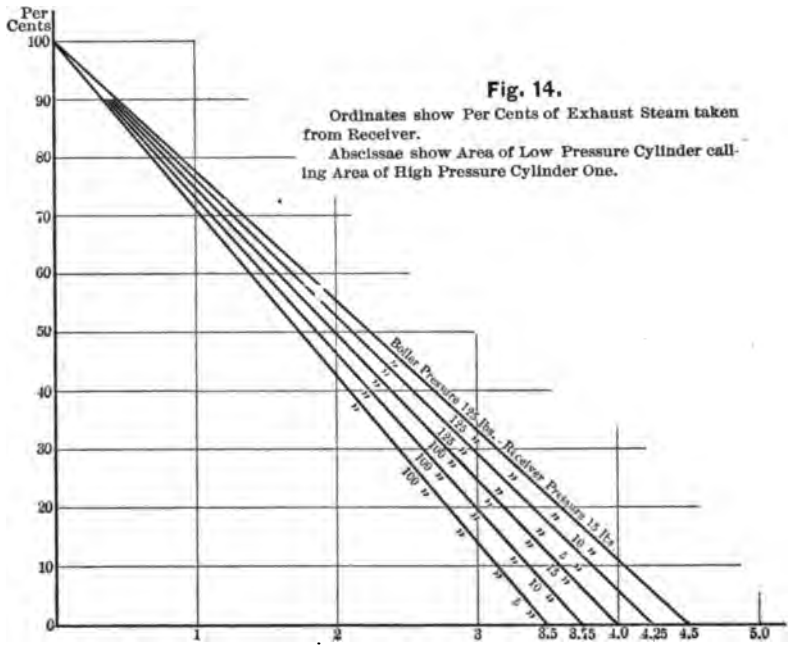

heating purposes after it has done work by expansion in the high pressure cylinder, we must consider the quantity or relative volume of steam required for such purposes, the pressure at which it is required, and the variations in such quantities before we can properly say what the size of the low pressure cylinder shall be compared with the high pressure.

We may have a problem with one or two constants with one variable or more. If the variables become numerous we can then only solve the problem by the "method of approximation."

To show the practical use of Fig. 14, let us consider a few cases:

CASE I.—*Plain Cotton Mill.* Steam used for running engine and

for dressing during the whole year, and for heating the mills for about five months.

Average amount of power required for 1,000 spindles on 30's yarn, 18 H. P. Amount of coal required per 1,000 spindles for heating and slashing for middle New England about 13 tons. About 30% of this, or 4 tons, is used for slashing, the consumption of which extends through entire year. The remaining 9 tons are used for heating during the five cold months.

4 tons = 8,960 lbs. for 308 days = 29.09 lbs. per day of 10 hours = 2.91 lbs. per hour for 7 months.

9 tons = 20,160 lbs. for say 150 days, including Sundays, = 134.4 lbs. per day. About one-third of this would be burned when engine was not running, leaving $134.4 \times \frac{2}{3} = 89.6$ lbs. for 10 hours when engine was run, or 8.96 lbs. per hour. $2.91 + 8.96 = 11.87$ lbs. for 5 months.

$$2.91 \times 7 = 20.37$$
$$11.87 \times 5 = 59.35$$
$$79.72 \div 12 = 6.64$$ lbs. per hour, average for twelve months.

As there remains for useful work at exhaust only about 75% of the steam evaporated or admitted to engine, the amount admitted to engine per hour must equal $6.64 \div 75 = 8.85$ lbs.

8.85 lbs. @ 2.05 lbs. per H. P. = 4.32 average equivalent H. P. of exhaust steam used for 12 months per 1,000 spindles.

$4.28 \div 18 = .24$ or 24% of exhaust steam is used leaving 76% to go into low pressure cylinder. The ratio of areas of low and high pressure cylinders should then be, for 5 lbs. pressure in receiver $3.5 \times .76 = 2.66$ for 5 lbs. receiver pressure, or $4.0 \times .76 = 3.04$ for 15 lbs. receiver pressure.

Case II.—Like Case I., with an addition of steam required throughout the year for yarn dyeing and small addition of power. These would of course vary with the size of dye-house and quality of work done, and for each case must be considered separately. The example given is worked through from data obtained from an actual case.

In the case in hand the yarn dyed averaged numbers 29's, and the amount dyed was very nearly 50 per cent. of the production of a 40,000 spindle mill on the average number given. The amount of coal burned to do this work was 13.9 tons per week; 8 tons of this was burned when the engine was running, and 5.9 tons was burned at night and during the noon hour.

8 tons = 17,970 lbs. for 60 hours = very nearly 300 lbs. per hour.

300 ÷ 40 = 7.5 per hour per 1,000 spindles.

In Case I. we had coal consumed for heating 8.96 lbs., and for slashing 2.91 lbs. per 1,000 spindles per hour = 11.87 lbs. for 5 months, and for slashing alone 2.91 lbs. per hour per 1,000 spindles for 7 months.

For Case II. we shall have 11.87 + 7.5 = 19.37 for 5 months, and 2.91 + 7.5 = 10.41 for 7 months.

19.37 × 5 = 96.85
10.41 × 7 = 72.87

169.72 ÷ 12 = 14.14 lbs. per hour average for 12 months.

14.14 ÷ .75 = 18.85 lbs. per hour admitted to engine.

18.85 lbs. at 2.30 lbs. per H. P. = 8.20 H. P. average for 12 months.

The power required for this mill and dye-house would be about 19 H. P. per 1,000 spindles.

8.20 ÷ 19 = .43 or 43% of exhaust steam could be used from receiver, leaving 57% to go into low pressure cylinder. The ratio of areas of cylinders shall then be for about 5 lbs. pressure in receiver 1 to 3.5 × .57 = 1 to 2.00, or 1 to 4. × .57 = 1 to 2.28 for about 15 lbs. receiver pressure.

CASE III.—*Engine at Lower Pacific Mills.*

The dimensions are as follows:

Cylinders.	Diam.	Stroke.	Volume.	Ratios of Areas and Volumes.
			cu. ft.	
Small.	32″	72″	33.6	1 to
Large.	44″	72″	63.4	1.89

The various conditions under which this engine is run are as follows:

1st. To run when very little steam is taken from receiver.

2d. Ordinary running, summer time, with moderate quantity of steam taken from receiver for dyeing, slashing, wool washing, etc.

3d. Ordinary running, winter time, with large quantity of steam taken from receiver for dyeing, heating mills, slashing, wool washing, etc.

4th. Extra steam power required in case of high or low water.

The first set of conditions happens occasionally on Saturdays

when dye-house is not running. If it be in summer time only about 50 H. P. of exhaust steam is required from receiver. If the initial pressure is 100 lbs., as it will be soon, the cut off on 32″ cylinder at 0.3 and 44″ cylinder at 0.5, the engine would develop about 950 H. P., and the amount of exhaust steam taken from receiver could equal about 50 H. P. The dye-house being stopped the full power of engine is not required.

Ordinary running in summer time requires about 1,000 H. P. from engine, and 450 H. P. of exhaust steam from receiver for the various heating purposes. With a cut-off of 0.40 in 32″ cylinder, and 0.35 in 44″ cylinder, the power developed would be about 1,050 H. P., and the required amount of exhaust steam could be taken from receiver.

Ordinary running in winter time requires about 1,000 H. P., and 600 H. P. of steam from the receiver for the various heating purposes. With 0.45 cut-off on 32″ cylinder, and 0.25 on 44″ cylinder, the engine will develop about 1,030 H. P., and 600 H. P. of exhaust steam can be taken from receiver.

When extra steam power is required, either or both cylinders can be run as high pressure condensing.

The engine in its present condition is just one-half its proposed power when running compound, the full plan being, as additional power is required, to make it into a pair of tandem compounds, and when this is done the required amount of exhaust steam can be taken from the receiver with much shorter cut-offs on 32 inch cylinders than have been indicated above.

As we have been limited to 75 lbs. boiler pressure on the old boilers, we have run nearly all the time in winter with the 44 inch cylinder high pressure, and 32 inch low. The cards when running this way, with 83 per cent. of exhaust from 44 inch cylinder, taken from receiver for heating purposes, are shown on page 59.

Average per cent. taken from receiver for 7 months 450 ÷ 1,000 = .45.

Average per cent. taken from receiver for 5 months 600 ÷ 1,000 = .60.

Thus leaving 55% for 7 months to go into low pressure cylinder, and 40% for 5 months to go into low pressure cylinder.

$$\begin{aligned} .55 \times 7 &= 3.85 \\ .40 \times 5 &= 2.00 \\ \hline & 5.85 \div 12 = .49. \end{aligned}$$

3.75 × .49 = 1.84 ratio of areas of cylinders. It is intended to carry about 10 lbs. pressure in receiver.

CASE IV.—A coarse cotton mill, dyeing about 75 per cent. of product in yarn and stock.

The actual figures for a year's run are given below. The coal consumption per 1,000 spindles per year for heating mills, dyeing and slashing was 90 tons Cumberland coal. If we take the amount required for heating and slashing at 18 tons per year per 1,000 spindles for coarse work, we shall have 90 − 18 = 72 tons per 1,000 spindles to charge to dye-house. 72 tons = 161,280 lbs. for 308 days = 524 lbs. per day. About 20 per cent. of this is burned when engine would not be running, leaving 524 − 104.8 = 419.2 lbs. for 10 hours run = 41.92 lbs. per hour. 18 × .30 = 5.4 tons used for slashing = 12,096 lbs. for 308 days = 39.3 lbs. per day = 3.93 lbs. per hour.

41.92 + 3.93 = 45.85 lbs. per hour for slashing and dyeing for 7 months.

18. × .70 = 12.6 tons used for heating mills = 28,224 lbs. for 150 days = 188 lbs. per day. About one-third of this would be burned when engine was not running, leaving 125 lbs. for 10 hours run, or 12.5 lbs. per hour.

45.85 + 12.5 = 58.35 lbs. for heating, dyeing and slashing for 5 months.

45.85 × 7 = 320.95
58.35 × 5 = 291.75

612.70 ÷ 12 = 51.06 lbs. per hour average for 12 months.
51.06 ÷ .75 = 68.08 " " " " " " admitted to engine.

68.08 lbs. at 2.85 lbs. coal per H. P. per hour = 23.89, average equivalent H. P. of exhaust steam used throughout the year per 1,000 spindles.

The actual power required to drive everything, including dye-house, was 27 H. P. per 1,000 spindles in this case.

23.89 ÷ 27 = .88, or 88% of the exhaust steam can be used on an average for the entire year.

The proper type of engine to use in such a case as this would be a high pressure non-condensing, from which 84% of the exhaust steam could be used on an average throughout the entire year.

In the above calculations various amounts of coal per H. P. per

hour have been used, as has been shown in table I., page 50, which would be required for various per cents. of exhaust steam used, and all boiler pressures have been assumed at 100 lbs. per sq. in.

III. Regulation of Receiver Pressure.

As the amount of exhaust steam taken from the receiver is necessarily a variable if the cut-off in low pressure cylinder is constant, the receiver pressure must be a variable.

Under certain conditions the high pressure cylinder would regulate itself to the amount of exhaust steam and power required. Under other conditions it would not regulate itself, but in fact would work against regulation.

Supposing a slight increase above the average amount of exhaust steam is required, the pressure in receiver would decrease slightly, the work done in the low pressure cylinder would be decreased through loss of initial pressure and that in the high pressure cylinder increased by reduction of back pressure. If the relative areas of cylinders and cut-off in low pressure cylinder are such that the decrease of work done in the low pressure cylinder is greater than the increase of work done in the high pressure cylinder, then will the cut-off in high pressure cylinder increase to make up the deficiency in power and thus supply more exhaust steam, tending to bring the receiver pressure back to its normal condition and supply the draught from it.

In case, however, the relative areas of cylinders or cut-off in low pressure cylinder should be such that the decrease of work in low pressure cylinder should be *less* than the increase of power in high pressure cylinder, then the cut-off in high pressure cylinder would *decrease* in order to produce the amount of power required, and thus the amount of exhaust steam would be decreased and the receiver pressure still further lowered, thus working directly opposite to the condition desired.

There is a liability of having unfavorable conditions for regulation in engines where the low pressure cylinder is large as compared with the high pressure, when steam is taken from the receiver; but when the areas of the two cylinders approach each other then the conditions unfavorable to automatic regulation, with constant cut-off in low pressure cylinder, will nearly always exist.

This difficulty is overcome by arranging so that the cut-off on low pressure cylinder can be changed by hand at the will of the engineer who has to watch the gauge showing the receiver press-

ure, and increase the cut-off on low pressure cylinder when the receiver pressure increases, and decrease the cut-off when the pressure decreases, the high pressure cylinder taking care of the work.

This arrangement is not wholly satisfactory, for when the amount taken from the receiver varies largely the pressure may change very much while the engineer is busy at his other work without his noticing the change, and then again he would not always stand ready to change the cut-off to suit the varying pressure in the receiver if he had nothing else to do.

The proper arrangement for supply where the amount used from the receiver varies largely is to have reducing valves between the high and low pressure systems of piping through which a supply of steam may pass in case sufficient quantity cannot be put through the high pressure cylinder, and to supply steam to the low pressure system in case the engine is shut down and is thus supplying no steam to the low pressure system.

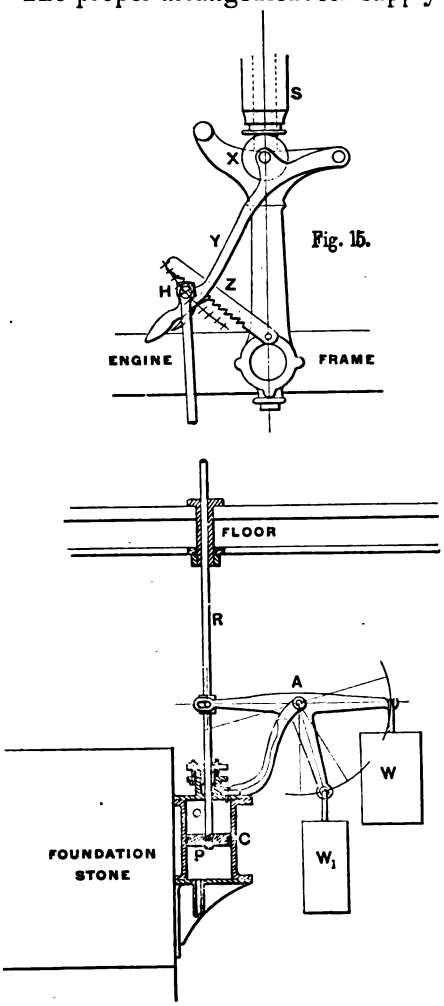

Fig. 15.

There should also be a relief valve on the low pressure system which will open in case all the steam exhausted from the high pressure cylinder is not used for heating purposes or in low pressure cylinder thus causing the pressure in receiver to increase.

In order to maintain a more nearly constant pressure in receiver than can be done by changing the cut-off on low pressure cylinder by hand, the writer has de-

vised and applied to the engine at the Lower Pacific Mills the arrangement which is shown in Fig. 15. The working of this arrangement is as follows :

There is a small steam cylinder C in which is a piston P. The receiver pressure is admitted to the cylinder above the piston. The cylinder below the piston is open to the atmosphere. The piston rod R connects with the governor of the engine at H. Raising the point H shortens the cut-off on engine, and lowering the point H, lengthens the cut-off. To the rod is connected the arm A and on this arm are hung two weights W and W.

When the steam pressure is at its lowest admissible point in the receiver the cut-off on low pressure cylinder must be the shortest, and the piston must be at its highest position. The weight W is then vertically under the pivot at A and so has no leverage and no effect on the piston. When the piston and pressure are in these conditions the weight W is adjusted so that it will just balance the pressure on the piston, the weights of the piston, rods, etc., and the resistance to moving the same. Call this a constant weight, although it can be changed at any time for adjusting the cut-off. The weight of this is shown algebraically by the formula

$$W = p \times a + w + r$$

where p = minimum pressure to be carried in receiver.
a = area of piston − area of piston-rod.
w = weight of piston, rods, etc.
r = resistance to moving piston, rods and governor.

The weight could be made equal to $p \times a + w$ and r could be determined by adding weights when the engine was running at speed.

When the steam is at its highest allowable pressure in the receiver, the piston is at its lowest point and the cut-off in low pressure cylinder must be the longest. The variation in pressure between the highest and lowest can be determined at pleasure by the weight W_1, which in itself is constant but in effect variable by swinging from the vertical position of no leverage to some other position giving it leverage, thus balancing the variable pressure on piston. The weight of this is shown algebraically by the formula

$$W_1 = (p_1 - p) \times a \times \frac{l}{l'}$$

where p_1 = maximum pressure to be carried in receiver.
p = minimum " " " " " "
a = area of piston — area of piston rod.
l = leverage of piston about pivot at A.
l_1 = " " W_1 " " " "

Increasing the weight W will increase the minimum pressure.
Decreasing " " " " decrease " " "
Increasing " " W_1 " increase the range of "
Decreasing " " " " decrease " " " "

The arrangement which is applied to the engine at the Lower Pacific Mills for changing the cut-off by hand is shown in the diagram. The shell of the governor S can be held up by the small wheel X. This wheel is attached to the arm Y which can be raised or lowered, and held by the segment Z. There is a Gale attachment to the governor which can be set to regulate at 51 revolutions, while the normal speed is 50, and when so adjusted the balls keep down and the shell runs lightly on the wheel X at the normal speed, but should anything happen to make the engine race the governor would begin to work at 51 revolutions, and is entirely free and independent of all connections made with it for regulation of receiver pressure.

While the governor on low pressure cylinder is set to have no effect upon the cut-off, due to speed under 51 revolutions per minute, the governor on high pressure cylinder is set for normal speed, 50 revolutions, and thus takes care of the work.

The claims for the "Regulator for Receiver Pressure" are:

1st. More uniform pressure in receiver, insuring more uniform work in slashing, drying or other operations for which the exhaust steam is used.

2d. Saving of fuel by reducing to a minimum the blowing off from low pressure system and the supply of high pressure steam through the reducing valves into the low pressure system. This is brought about as described by causing all the exhaust steam from high pressure cylinder to go into low pressure cylinder when not required for other purposes. Here it does work, and causes less steam of boiler pressure to be admitted to high pressure cylinder, thus making a second saving, or by taking a very small amount into low pressure cylinder when a large amount is required for other purposes, and causing more steam of boiler pressure to be admitted to high pressure cylinder, there to do work before being used for other purposes than power.

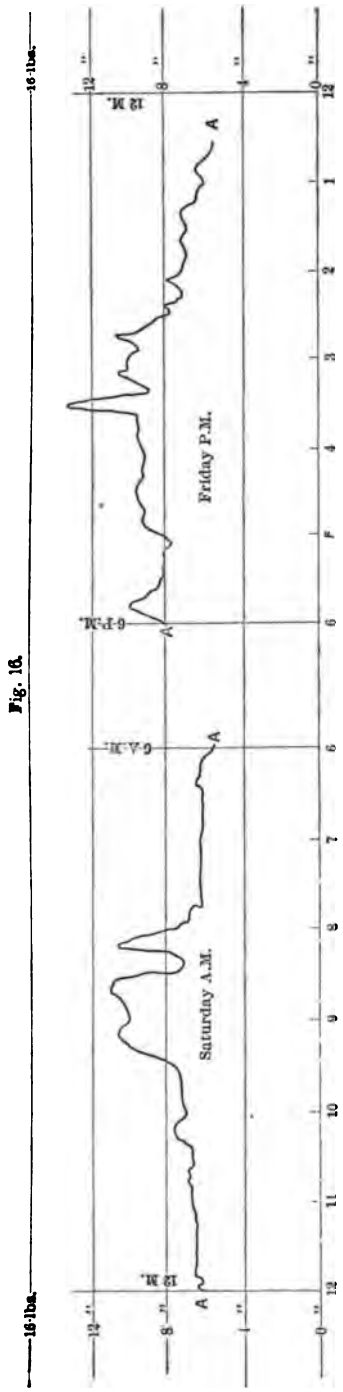
16 lbs.
12 M.
Saturday A.M.
6 A.M.
Friday P.M.
6 P.M.
12 M.
A
16 lbs.

Fig. 16.

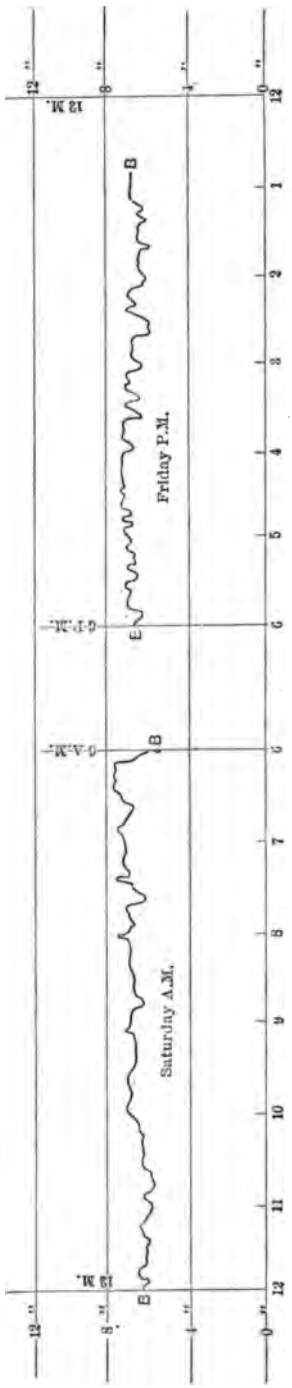
16 lbs.
12 M.
Saturday A.M.
6 A.M.
Friday P.M.
6 P.M.
12 M.
B
16 lbs.

Fig. 17.

The cards in Figs. 16 and 17 were taken by an Edson Recording Gauge attached to the receiver. Those marked A A were taken before the regulator for receiver pressure was attached. Those marked B B were taken after attaching the regulator. These diagrams prove conclusively the truth of the first claim, and the truth of the second claim necessarily follows from the proof of the first.

Table VII. shows the variation in mean back pressure, as shown by indicator cards taken every hour on Friday afternoon and Saturday forenoon, with varying amounts of power developed and varying per cents. of exhaust steam taken from receiver.

Conclusion:

All that has been said so far has related to the double compound engine. This engine can be used successfully up to boiler pressures of 125 lbs. per sq. in., and most manufacturers at present have no desire to carry any higher pressures than this, so that at present there is no need of discussing the triple expansion engine to any extent.

There is one suggestion, however, which will not be out of place, and that is, that in some places three different pressures of steam are required or could be used, as in a worsted dye-house. The high or boiler pressure for the engine, an intermediate pressure for crabbing, and low pressure for boiling, drying, etc. If it did not make too much complication of parts in the engine, the boiler pressure might be used in high pressure cylinder, exhausting into a receiver from which steam could be taken for running small engines and crabbing, the steam remaining in the receiver passing into the intermediate cylinder and expanded there to from 5 to 10 lbs. above the atmosphere and exhausted into a second receiver. From this receiver is drawn the low pressure steam needed for drying, boiling, warming mills, etc., the steam remaining in receiver passing into the condensing cylinder.

We have previously disposed of cases where very little steam would remain for the condensing cylinder by saying that the high-pressure engine is the type to use here. If, however, we wish to make use of high boiler pressure with corresponding gain in economy, we might use a compound engine, the large cylinder of which is not condensing but exhausts against a back pressure necessary to do the work required of the exhaust steam. If you should wish to carry pressures above what is now generally considered good practice, this type of engine should be carefully considered.

I have been led to present my views to the Society on these

three important points, for the purpose of bringing before the members certain conditions which must be met either before or after setting up and starting a compound engine for manufacturing purposes, or may still exist in some engines which are running. Those who have had intimate relations to such engines have probably been thinking of these same conditions. To those who contemplate putting in new engines, I hope that these suggestions may not come amiss. If this paper will call attention to, and create discussion on some of these points which should be met and decided upon when *planning* the engine, instead of after its construction, or perhaps not met at all, and so the greatest economy never attained, then the object of the paper will have been accomplished.

TABLE VII.

CONDITIONS OF RUNNING ENGINE WITH RECEIVER PRESSURE REGULATOR ATTACHED.

Date.	Time.	Indicated Horse Power.			Per cent. of steam exhausted from 32″ cylinder.		Apparent cut-off in 44″ Cyl.	Mean back pressure in 32″ Cyl.	Remarks.
		32″ Cyl.	44″ Cyl.	Total.	Taken into 44″ Cyl.	Used for Heating Purposes.			
	P.M.								
	1.00	601	228	829	29	71	0.35	6.5	No account has been taken of clearance.
	2.00	528	174	702	24	76	.25	6.0	
	3.00	473	221	394	32	68	.31	7 5	
	4.00	499	184	683	27	73	.26	6.0	
	5.00	432	258	690	45	55	.36	7.8	
	5.55	415	219	634	40	60	.35	6.0	
	A.M.								
	6.15	577	352	929	60	40	.65	8.0	
	7.00	597	310	907	44	56	.50	8.0	
	8.00	548	342	890	61	39	.60	9.0	
	9.00	514	339	853	67	33	.64	7.5	
	10.00	526	326	852	60	40	.60	7.5	
	11.00	425	293	718	60	40	.48	6.5	
	11.55	459	278	737	46	54	.43	7.0	

DISCUSSION.

Prof. J. E. Denton.—I wish to express my admiration of this paper. I do not intend to discuss it. It calls attention to a new element in the problem of compound and non-compound engines. I want to ask Mr. Main how he obtained the figures for the cost of repairs, etc.

Prof. F. R. Hutton.—I might mention in the discussion of this paper that this morning, sitting at the table with a gentleman who

probably knows more than any other one man about mill practice in New England,* he made the statement that at Holyoke there was a new mill built at which they had no expectation whatever of using the water power there, of which there was an abundance, but that the demand for steam for manufacturing purposes, apart from power, necessitated their choice of steam as a motive power. It was a new fact to me, and it bears directly on the point brought out in Mr. Main's paper.

Mr. Geo. H. Babcock.—This paper is a very valuable contribution to the literature of the subject, and one which is quite novel and much needed. The remarks by Mr. Hutton recall to mind some instances which I have known in former years in which it has been found, for woolen mills particularly, where considerable heating and dyeing and drying was required, it was absolutely cheaper to run by steam power than by water power; that is to say, that they were obliged to burn as much coal for the heating and dyeing and drying, when running by water power, as they did when running an engine, and utilizing the exhaust for those purposes, while the wear and tear and convenience of steady power, etc., made it economy to put in an engine; but that has nothing to do with the paper before us.

Mr. W. F. Durfee.—The reading of this paper and the circumstances stated by Prof. Hutton, and further alluded to by the last speaker, called to my mind a curious invention which was brought out, I think, in France, some years ago. I am not able to recall the inventor's name or the locality where the apparatus was applied, but it appeared to me then, as it does now, that in cases where water power is in excess, and a large amount of it running to waste, that such an apparatus could be utilized successfully. By its means steam for dyeing, heating and boiling purposes, was generated by water power. The water wheel was made to drive a frictional apparatus, the heat from which boiled the water in the boiler. The apparatus, as I remember it, consisted essentially of these features. There was a long cylindrical boiler inside of which was an equally long cylindrical flue. The flue was bored out on its inside. In the interior of that flue revolved a drum which was coated on its outside with leather or something of that kind, which was lubricated to a sufficient degree to prevent the heat from destroying the substance, and that drum was caused to revolve by means of the water power, thus developing by the

* Mr. Edward Atkinson, of Boston.

rubbing friction of its surface against the interior of the flue, heat, which produced a sufficient amount of steam for the dyeing, heating, and boiling purposes of the establishment, so that the heat for the whole works was generated by the water wheel.

Mr. Jerome Wheelock.—I think if we continue the discussion of compound engines far enough we shall make out that you can saw wood with a claw-hammer (laughter). I am going to say in passing that in several instances I have been called upon to furnish engines, condensing at one end and non-condensing at the other. I think in one or two instances the parties were so disgusted with the performance that they abandoned the exhaust heating and took the steam from the boilers for the heating with very marked success. In every instance where steam is used and where water is plentiful, I think the condenser can be used with great advantage, and use live steam for heating, and with a properly constructed engine of proper size where the cut-off can take place early, for ordinary purposes you can get results which will compare favorably with a compound engine. The compound principle is an apology for leaky valves and pistons. That is antagonistic to the general motion, but I put it in.

Mr. T. J. Borden.—My experience in manufacturing convinces me that power can be derived from water under favorable conditions, with greater economy than from steam under the best of circumstances, except in the immediate vicinity of coal mines, provided the quantity of steam required in the processes of manufacturing is not large in proportion to that needed for power.

In a few branches of manufacturing, the steam required for power is not more than one-half or one-third of that for other purposes. In such cases, power can be produced with a steam engine, the exhaust steam of which may be used for the other processes almost as effectively as if it had not passed through the engine. Under such conditions water is of little or no value for power. In by far the greater part of manufacturing operations, the steam required for power is large, compared to that requisite for other purposes.

The important elements of value in water powers are :

1. Water supply that can be utilized by a moderate outlay for dam and water ways in proportion to the power the stream will yield.

2. Facilities for holding back considerable reserves of water in lakes for use in the summer and early fall months.

3. Location easily accessible to the markets.

Water powers possessing these characteristics, and there are many such in this country, are of very considerable value as sources of power notwithstanding the great reduction in recent years in the cost of producing power by steam. Streams possessing no reserves of water under control for use in dry seasons cannot be utilized to so large a proportion of their average flow as those having such reserves.

The power to be relied upon from streams of this character is that which can be developed by about a minimum flow of the stream, with a fall equal to the difference in height between the surface of water above the dam, and at the tail race in times of ordinary freshets. The leading source of disappointment in the use of water powers, is the placing of more machinery on a given water privilege than the stream is capable of driving in times of a minimum flow of water.

This is no good reason for condemning or underrating the value of water powers.

Mr. H. H. Suplee.—In connection with Mr. Durfee's remarks about generating heat from water power, I think it might be well to remember that the Cowles Electric Smelting Company at Lockport are producing exceedingly high temperatures with dynamos driven entirely by water power, and that those high temperatures, which are probably the highest that are used in the arts, are obtained without the combustion of any fuel whatever. They are using electric furnaces for the purpose of producing metallic aluminium from corundum.

Mr. Borden.—I might say in connection with the water power at Holyoke that the original owners of the water power derive a decided profit from it; and that the reason why it is not now sought for is because the power is exhausted during a considerable part of the year. The party who now undertakes to do anything with water power in Holyoke must do it, taking the chances of running short in the summer season, and that is the principal reason why steam is used instead of water power; not because it is cheaper, if the water power could be had through the year.

Prof. Thurston.—I have not arisen to take serious part in this discussion. Before leaving home I had not time to read this paper with the care I wanted to give it, and I may ask the privilege of putting in my remarks in writing, if I can get time between the adjournment of the meeting and the publication of the paper.

I have had some experience of late in the use of water power, and in the comparison of water with steam, and I have been impressed as I never was before, with the very serious unreliability of water power in many sections of our country, both as to the amount flowing in the course of the year and securing the power that it may give, at any one time, economically. My observation has been, where I have had the opportunity of observing the flow of streams during the last fifteen or twenty years, that, at every point in the country with which I have been familiar, the flow of streams is becoming rather less annually, and vastly more irregular continually, and recently we have been endeavoring to harness a stream which has proved to be the most unmanageable case of the kind I have met yet. It simply emphasizes the fact, which I think is observed everywhere, that one of the reasons for substituting steam for water is that we cannot rely on having water power when we want it; and, although the stream may give full power for nine months in the year, for three months it is apt to be of very uncertain flow as well as of very small volume. The stream of which I now speak has a flow, I should imagine, at certain periods in the year, of not less than a thousand horse power. At other seasons, I should presume that the amount of flow would hardly be enough to supply the ordinary leakage from flume and wheel. In this case, the objection to utilization of water is not the cost of fitting up. I can, I think, under these specially favorable conditions get the dam, and the flume and water-wheel, the whole thing in running order, at a cost of not over $40 per horse power. I do not think that it would cost that; that is to put the whole thing in running order. When that is done we have to contend with this uncertainty as to flow. We may have a dry spring and a wet summer, or a dry summer and a wet fall, or a wet summer and a dry fall. We never know what to expect from this stream, except that through the winter we can get all the power we want.

Another difficulty that I have found in the application of water power, and one which has led to the changing of plans in the direction of substituting steam, is the difficulty of securing exact regulation of water power. I have not yet found a governor that could handle our water power satisfactorily, that would keep the speed anywhere near where it ought to be in driving electric light apparatus. I doubt very much whether, in the large majority of cases, it is possible to secure that regulation necessary for doing

that kind of work. Where the work is constant, as in a cotton mill, there is, of course, very little difficulty in handling the water power satisfactorily in this respect; but where large amounts of power are liable to be thrown on and off, as in a system of electric lighting, I find no governor of any service.

It is partly because our streams are getting less and less reliable all the time that we see this enormous increase of steam power throughout the country. There is, of course, an enormous decrease going on continually in the cost of steam. It has become financially practicable to-day to put steam in a mill at Holyoke or Lowell, and to neglect the water power which lies right at hand. I presume the time has come, in many sections of the country, when the cost of installation is so great with water power and so little, comparatively, with steam, that the difference in the actual cost of power becomes so slight, that the special advantages of steam will more than compensate for those differences in first cost, and that steam may be introduced where water power can be had for a comparatively small cost. The cost of steam, when used in the manner suggested in the course of the discussion, and the exhaust employed for other purposes, is enormously reduced. I do not agree with my friend Wheelock, if he means to put his statement as a general proposition, at all. I should presume that, in all cases that are not especially unfavorable, it would be very wise, if possible, to save that exhaust steam and use it. I have never known a case in a well arranged plan where that was not the fact. I think that where we can get a horse power for three-quarters of a pound of steam per hour, as competing with power at four to eight times that amount, there can be very little question as to the wisdom of making use of exhaust steam for heating.

Prof. Denton.—I want to ask a question that has always puzzled me. An instructor desires to answer the question of water against steam very often, and certainly the written account of water *versus* steam is very mixed. I think in the Vienna report there was a statement that water power was infinitely cheaper than steam, giving a certain quotation from a Philadelphia engineer, and it was immediately answered by that same engineer stating that the quotation was entirely erroneous, because he had not taken account of the cost of repair to dam and wheels. When he put in those figures the cost was equal between the water and steam. That is the first instance I remember. Then the neces-

sity comes in of having steam in the cotton mills for operations other than to supply power, and this question arises, which I hope Mr. Borden will answer. Is it a fact that the mills using steam entirely can compete in the market with the mills using water? If they do, why is it that the less cost of the water, which I gather from his remarks is a fact, does not enable the mills using the water to put the market down against the mills which exclusively depend on steam?

Prof. De Volson Wood.—In regard to water power and steam power, the uncertainty of the water power is a sufficient reason for bringing steam into use, and the statement which was made by the last speaker is sufficient to settle the point.

Prof. Denton.—Not where there is plenty of water and no drought.

Prof. Wood.—Then the question was not just as I supposed. But I was going to make an illustration which would be partly to the point in the discussion. It is cheaper to transport freight on a canal per ton-mile than it is on a railroad; but the railroads are drying up the canals. Why? Because time is a great element, and if the water power flows only a part of the year, and fails when it would be most profitable to turn out its products, the use of a steam engine, if at hand, might decide the question as to whether that manufacturer relied upon steam or water; for if he relied upon the steam engine he might continue its use and let the water run to waste. In regard to the figures in the table on the sixty-first page:—In attempting to determine the efficiency of plant, I find an omission which makes it practically impossible for us to determine the efficiency of plant, and that is the heating power of the coal. Now for the purpose of this paper, perhaps it may be unnecessary to more than state the amount of coal used per indicated horse power per hour; but there is such a difference in the heating capacity of coal—whether it be coal containing a great deal of dust and dirt, or whether it be of a good quality, or still further, if it be picked coal, that if we attempt to determine the efficiency of plant it becomes necessary for those who report these figures to determine, either chemically or otherwise, the heating power of the coal. Not long since, I think it is within a year or so, a triple expansion engine on a small steamer was put afloat in England, and the makers were required to develop an indicated horse power for one and a quarter pounds of coal, and as a result of the trial it was reported that they used 1.23 lbs.,

an extremely low figure, and it would have interested me much more if I could have known all the circumstances of the trial, especially the heating power of the coal; but the last element was entirely wanting. So that we are unable to decide whether that triple expansion engine, using 1.23 pounds of coal, was really more economical than the one just referred to using 1.63. I wish that this element might be given so that efficiencies might be more accurately determined. In all cases reference should be made to the quality of the coal when an analysis cannot be reported.

Mr. Wm. H. Odell.—I want to cite a case which has been under my own observation for the past five or six years in the city of Binghamton, in the State of New York, in the mill of Joseph P. Noyes & Co. They have a wonderful supply of water, but from the time that cold weather sets in they invariably run their engine and boiler in preference to using the water. They have found by careful observation that the cost of running the mill is just the same whether they run by water or steam. It requires the same amount of steam to heat the mill if they run by water as if they run by steam exclusively, and use the exhaust from the engine to heat the mill.

Mr. Durfee.—As a further illustration of the point raised by Prof. Wood, I would say that I have lately removed some machinery from one building to another and changed the boilers; under the first boilers we used bituminous coal. Under the new boilers we use "pea and dust," a very much cheaper coal per ton, but I found that the money consumed in driving that machinery was practically the same in each case, the last fuel costing a great deal less per ton, but we were obliged to use more tons of it, so that the actual cost was practically the same under the two conditions.

Mr. Borden.—May I ask Prof. Denton to repeat his question about steam and water which he asked just now?

Prof. Denton.—Given a case that has plenty of water, and another case using steam, why is it that each of them sells his goods equally cheap? Why does not the water mill undersell the steam mill?

Mr. Borden.—The selling price of goods is not fixed by the cost of production in the establishment which can produce them most economically, but rather by the cost in a concern that can just sustain itself without making either profit or loss.

Human nature is such that all who can do better than that

cheerfully pocket the profit, and those who cannot do as well go to the wall, leaving the selling price to be determined by those at the foot of the class, rather than by those at the head.

Steam power located near the coal fields and the leading markets may have sufficient advantage in the transportation of fuel and raw materials and its finished product, over a water power located at a distance from both coal fields and markets, to fully offset the advantages which the latter would possess over the former if both were located at the same point. This is especially true of establishments requiring a considerable quantity of steam for other purposes than power.

Prof. Denton.—How as to Fall River?

Mr. Borden.—Fall River is quite accessible both to the coal fields and the markets as compared with points farther east, but the water power there is not of sufficient magnitude to be of much importance, more than seven-eighths of the power used there being from steam.

The large water powers at Lowell, Lawrence, Manchester, Lewiston, Biddeford, Augusta (Me.), Augusta (Ga.), Holyoke, Cohoes and many other points that might be named, if used within their limits of minimum flow, plus reserves available, are decidedly more economical than steam power, on the basis of original cost of development, although on the basis of present charges made by original owners they may not be.

At several of the localities I have named the rivers or their tributaries have their sources in large lakes, the outlets from which are owned and controlled by the companies that own the water privileges on the stream. Very large volumes of water can be held back during the winter and spring, and let down during the summer. If the power attempted to be used on these streams was held within the limits of regulation by those large sheets of water, the power available would be as regular as if produced by steam.

Prof. Denton.—Then I understand there is no location in New England where large manufactures are carried on where there is plenty of water running all the year round.

Mr. Borden.—The large water privileges in New England have plenty of water to drive a large amount of machinery the year round, but if construction ceased at that point there would be a considerable amount of unused water running by during two-thirds or three-quarters of the year. For the purpose of utilizing this water, many manufacturers put in additional machinery, to be run

by water when it is available and by steam during the remainder of the year. The more common reason however why many establishments have outgrown their water power is that the natural increase of their business has required enlargements of their plant. There are important advantages in making the increase in connection with existing plants, rather than by seeking new locations for such increase, although the adoption of steam power therefor is relatively more expensive than would be justifiable in an entirely new establishment.

Mr. W. S. Rogers.—I would state for Prof. Denton that I recall a case in Cincinnati where there is one large cotton mill that is located where they have ample water, sometimes all the year round and sometimes for two or three years; occasionally they have a break every two or three weeks. But they did not use to be that way. I notice that they are not using their water wheel at all, but are using their engines for steaming, heating, drying and running their establishment, and they are located right on the race. The firm have dissolved and one member has started in business for himself, and instead of starting where he had plenty of power and could use the same water, he went, I should judge, four hundred feet from it and put up his mills and uses a steam engine, and his mill runs just as many hours as the other does, and he can go to market and sell just as cheap and compete with the others, and he is no nearer the coal field and has no advantages over the other mill and the other has none over him, while the other has abandoned the water wheel and is using steam. So I think that steam there is the best.

Mr. L. F. Lyne.—Before the discussion is closed I would like to make a remark having reference to the remarks of Mr. Durfee, which bore upon a very important subject, and in corroboration of his statement in reference to the equal money value of bituminous coal as against pea and dust. During the five years I have operated some boiler furnaces and experimented to some extent with those fuels, and I have found that his statement is correct. Another element which places the bituminous coal in a more economical light than the pea and dust is the fact that it is not so destructive to the grate bars and furnaces. In a run of five years we still have the same grate bars that we started with, and all the repairs that had been made to the furnaces during that time is the replacing of four courses of brick just abo e the grate bars, to say nothing of the prevention of the destructive action of the sulphur which you

find in impure anthracite upon the inside of the iron chimneys which convey the smoke and gases to the atmosphere.

Mr. Chas. H. Manning.—In Mr. Main's first assumption of the cost in coal per horse power of the three types of engines, I think he is hard on the non-condensing engine in charging it with 3 lbs. of coal, even if the feed temperature is as low as 100° Fahr., which is fair for the condensing engine, but unnecessarily low for the non-condensing.

When using a pressure of 100 lbs. per gauge, the benefit of condensing is very small, and with the less initial condensation due to less cooling of the cylinder during the exhaust, the higher temperature of feed water and the saving of power necessary for an air pump, the non-condensing engine with 100 lbs. initial against 5 lbs. back pressure will show an efficiency very close to that of a condensing engine with 80 lbs. initial pressure.

Mr. Main says that "the difference in the amount of condensation by passing the steam through an engine or passing it through pressure regulators and pipes should be charged to the power."

This would give the casual reader the impression that passing through a reducing valve caused condensation, which certainly Mr. Main does not intend to convey, as during the passage of the valve there is free expansion, therefore superheating.

When using all the exhaust steam for heating, etc., he charges 25 per cent. of the fuel to power, wherein I am confident he is again in excess of the facts unless the cylinder volume is larger than it should be for the work done. With an engine running against a back pressure of from 5 to 10 lbs., or in the case of the high pressure cylinder of the compound engine, the cards at the terminal pressure should account for from 85 to 87 per cent. of the water evaporated in the boiler.

In support of this I would cite the case of a pair of non-condensing engines at the Amoskeag Mill, Manchester, N. H. 36″ diameters of cylinder, 6′ stroke, and running 60 revolutions per minute, which are frequently started at from nine to eleven hundred horse power without making any change in the fire-room, or without its being apparent there in the coal consumption, the increase of coal cost being within the daily variation from other causes. More steam than is required to run them at this power is needed in the dye houses at all times, and its course is merely changed from through the reducing valves to through the engine.

My belief is that it costs less than one-half a pound of coal per horse power per hour, but as all the steam is drawn from one general system it is hard to apportion the costs exactly.

In a large proportion of the New England cotton mills the steam power is auxiliary to the water power, and the amount of power required from the engine is a constantly varying amount. Under these circumstances the exact determination of relative diameters of the cylinders of a compound engine becomes impossible, since what is right with one load is wrong with another, and under these circumstances, I think, a smaller ratio than that of 1 to 4, as suggested by Mr. Main, or from 1 to 3, or 1 to $3\frac{1}{2}$, is much better.

The tandem type under these conditions is much preferable, as from the unequal distribution of power between the two cylinders, necessitated by a constant receiver, pressure is less objectionable.

In a marine or a pumping engine the maximum power is required nearly all the time, but even then with a boiler pressure of 100 lbs., I should choose a smaller ratio than that laid down by Mr. Main.

For maximum power it is not well to expand below 10 lbs. absolute, and with 115 absolute initial this would give about 11.5 expansions total, and $\sqrt{11.5} = 3.39$, or roughly, the ratio of cylinders should be about 1.4.

Mr. Main.—The first question asked was by Prof. Denton. I would say to him that I have not been able to get any figures that extended over a long enough period to say exactly what the cost of repairs would be, but have established the cost at two per cent., as given in the paper for all cases.

Almost all the questions asked have been answered by other persons.

Mr. Babcock speaks of the case of a woolen mill where all the exhaust steam can be used. I would say that before putting in this compound engine at the Pacific Mills we had a five hundred horse power high pressure engine, and all of the exhaust steam from that engine was used in the dye house. When the engine was shut down the fuel consumption was just as much, and sometimes even more, than when the engine was running, and the way that I explained that to myself was that the engine was a sort of regulator on the dye house, and they could not get any more steam than went through it, and when the engine was not running they could draw more heavily (laughter).

With reference to the cost of power as produced by the appa-

ratus spoken of by Mr. Durfee, I should think that it would depend a great deal upon the cost of the development of the water power and of the plant which is put in to create the friction and produce the heat. The relative cost of steam power and water power is a very complex question, and depends upon so many variable quantities, that it cannot be established for any one locality, and the cost of steam power depends upon the amount of exhaust steam which can be used for various heating purposes. It depends upon the cost of coal in the different localities. The cost of water power depends upon the development of the power and the cost of the dam and canals, etc., and upon the cost of the installation of water wheels with their feeders, wheel pits, raceways, etc., which in large plants are very often more expensive per horse power than in small plants. While in the case of steam power the cost of power is less for large plants than for small plants, so that we have just the reverse, usually the cost decreasing with the increase of power in steam plants, and the cost increasing with the increase of power in water appliances.

On the Merrimac River, the case which has been cited, which has Lake Winnepesaukee and several other lakes as a reservoir, the high water in the tail-race will decrease the power very much, during a freshet. I had occasion to see how many days the water was high enough to decrease the power 33 per cent., and in the year 1886 there were twenty-five days when the power was decreased 33 per cent. on account of high water in the river, thus requiring a plant 50 per cent. larger than is required ordinarily. If a mill was dependent on water power then they must put in a water appliance sufficiently large to develop the required power at the low head, so that the cost of water power in that case is increased by the cost of the plant. There are other advantages which have been touched upon in the use of steam for power—the greater uniformity of regulation which Professor Thurston spoke about, and then there is a practical question, when we are using water power with no steam plant, if there is an irregularity of the flow, there are days when the mill must be closed, and in that case the best help will leave the mill and go to other places where they get steady employment. Then in the case of irregular flow you must have steam plant to make up the deficiency or else stop the mill, so that you have the cost of a double plant, whereas if you were dependent entirely on steam, you would have only the cost of one plant.

About the heating power of the coal, it would have been a good deal better if we could have had the pounds of dry steam consumed per indicated horse power, but I could not get those figures.

I think I have touched upon nearly all the questions that were asked.

CCCXIV.

*A FOUNDRY CUPOLA EXPERIENCE.**

BY FREDK. A. SCHEFFLER, ERIE, PA.
(Member of the Society.)

UNFORTUNATELY the writer was unable to attend the meeting at which his first paper was read under the above title, nor to give time in closing the debate upon it to answer fully the able discussion made by Mr. H. I. Snell and others. Hence this brief answer to the questions asked at that time. As Mr. Snell kindly took the trouble to inquire into some matters of importance which I had not the forethought to include in the article, an effort will be made in this way to make clear all of the points raised.

In the first place the proportions of the charges of fuel and iron made at the time the paper was written cannot be ascertained, but as the cupola is to-day doing practically the same work, the information as to the charges at this time will answer, as these do not vary excepting under certain circumstances. The first charge or bed of fuel is 2,000 lbs. of coke (this is *not* the very best of coke), then 2,500 lbs. of iron, then 200 lbs. of fuel, then 2,000 lbs. of iron—the fuel and iron being reduced as each successive charge is made.

The distance of the tuyeres from the bed was given in the original paper, and is 24 inches. There had always been trouble with the old cupola in having the tuyeres too low down, so the new one was made to insure the melted iron remaining below the bottom of same.

In regard to the measurement of the blast, I would say that the gauge was connected by a ½-inch rubber tube to the top of the blast box around the cupola, and the top of the gauge about 30″ above the top of the blast box, the gauge being located only 3′ distant. The pressure of 12 oz. has been found to be too high,

* This paper is in continuation of the paper by same author presented at the Nashville Meeting, May, 1888, and published with discussion as No. CCXCIX., on page 496, Vol. IX. Transactions.

as with this cupola and a blast of only 9 oz. the iron is melted faster than it is required. Of course the pressure is *gradually* increased to 9 oz., and does not reach this amount until about the middle of the heat, when it is gradually reduced. Only 4½-oz. pressure is used at the beginning of the heat.

Heats to the amount of 40,000 lbs. can be easily taken off, and it is very frequently done, and in considerably less time than was required for the old cupola when melting 34,000 lbs.

The location of the gauge was not changed from that which it occupied when connected to the old cupola, as it is situated directly between the two cupolas—the connecting pipe being simply transferred from the old to the new one, so that any chance for a differential reading to occur was entirely dismissed.

The larger diameter of the new cupola may have something to do with the increased amount of blast, as there is undoubtedly a greater total area between the pieces of coke and iron forming the charges than there was when the old cupola was used. The charging of both cupolas was the same in proportion to the amount to be melted.

I certainly think that excellent work was performed by the old cupola, for more was required of it than its real rated capacity, but something even better was desired, and it was certainly realized.

The proportion of iron melted to fuel consumed is from 7½ to 8 lbs. of the former to 1 lb. of the latter. Probably if more expensive fuel was used the proportion might be increased somewhat, but I doubt whether it would make sufficient difference to pay for the increased cost of the fuel. If any of the members can throw some light upon this subject I am sure it will be appreciated.

DISCUSSION.

The Chairman.—Mr. Snell, do you wish to add anything to the discussion which was had at the last meeting?

Mr. H. I. Snell.—I do not know that I have much to add to the discussion of this paper. Mr. Scheffler does not exactly answer the questions I asked. He has given the height of the tuyeres in the new cupola, and I asked for those in the old one. I suppose that perhaps they were too low down in the first case, and that partially accounted for the difference in the amount of iron melted

in the new cupola with the same blower as used on the old one. He says that the increased amount of blast was probably due to the larger area of the cupola and the greater distance between the particles of coal and iron. That, I think, conveys an erroneous impression. If he means the amount of increased pressure per square inch, it should have been more in the smaller cupola than it would have been in the larger one, from the fact that the pressure of blast from a fan blower diminishes as the delivery is enlarged after the enlargement exceeds the capacity of the fan. The amount of iron that he melts in the new cupola is about the usual proportion per pound of fuel. The old cupola that he complains of shows a great deal better practice in the amount of iron melted than I have met with in any examinations of cupolas I have ever made, and I took the trouble of making a comparison with some of about the size of the old cupola described in Mr. Scheffler's paper, and I will read a little of the data that I obtained. Here is N. S. Bouton's cupola in Chicago, 43 inches in diameter, that was charged with coke on an eight ounce blast. It melted 8.4 pounds of iron with one pound of coke, and was charged similar to the charge Mr. Scheffler reports in his new cupola, that is:

Bed, 800 lbs. coke,
2,000 lbs. iron,
200 lbs. coke,
2,000 lbs. iron,
Repeating to the last charge,
200 lbs. coke,
3,500 lbs. iron. They melted 10,764 lbs. per hour.

Mr. Scheffler's old cupola is, I believe, 44 inches in diameter.

In Tatum & Co.'s cupola, in Cincinnati, which was 44 inches in diameter, they required 17 ounces per square inch of blast, and melted only 6 pounds of iron to one pound of coke, and melted only 8,430 pounds per hour.

In another cupola, that of the American Bridge Co., in Chicago, a 44-inch cupola, eight-ounce blast, 6.3 pounds of iron for one pound of coke, and melting only 7,764 pounds per hour.

In looking over the question of cupolas, I have come to the conclusion that with about five or six thousand cupolas in this country, and every one of them charged in the best manner by men who have had experience of from thirty to forty years in charging cupolas, in every known and unknown method, and finally adopt-

as with this cupola and a blast of only 9 oz. the iron is melted faster than it is required. Of course the pressure is *gradually* increased to 9 oz., and does not reach this amount until about the middle of the heat, when it is gradually reduced. Only 4½-oz. pressure is used at the beginning of the heat.

Heats to the amount of 40,000 lbs. can be easily taken off, and it is very frequently done, and in considerably less time than was required for the old cupola when melting 34,000 lbs.

The location of the gauge was not changed from that which it occupied when connected to the old cupola, as it is situated directly between the two cupolas—the connecting pipe being simply transferred from the old to the new one, so that any chance for a differential reading to occur was entirely dismissed.

The larger diameter of the new cupola may have something to do with the increased amount of blast, as there is undoubtedly a greater total area between the pieces of coke and iron forming the charges than there was when the old cupola was used. The charging of both cupolas was the same in proportion to the amount to be melted.

I certainly think that excellent work was performed by the old cupola, for more was required of it than its real rated capacity, but something even better was desired, and it was certainly realized.

The proportion of iron melted to fuel consumed is from 7½ to 8 lbs. of the former to 1 lb. of the latter. Probably if more expensive fuel was used the proportion might be increased somewhat, but I doubt whether it would make sufficient difference to pay for the increased cost of the fuel. If any of the members can throw some light upon this subject I am sure it will be appreciated.

DISCUSSION.

The Chairman.—Mr. Snell, do you wish to add anything to the discussion which was had at the last meeting?

Mr. H. I. Snell.—I do not know that I have much to add to the discussion of this paper. Mr. Scheffler does not exactly answer the questions I asked. He has given the height of the tuyeres in the new cupola, and I asked for those in the old one. I suppose that perhaps they were too low down in the first case, and that partially accounted for the difference in the amount of iron melted

in the new cupola with the same blower as used on the old one. He says that the increased amount of blast was probably due to the larger area of the cupola and the greater distance between the particles of coal and iron. That, I think, conveys an erroneous impression. If he means the amount of increased pressure per square inch, it should have been more in the smaller cupola than it would have been in the larger one, from the fact that the pressure of blast from a fan blower diminishes as the delivery is enlarged after the enlargement exceeds the capacity of the fan. The amount of iron that he melts in the new cupola is about the usual proportion per pound of fuel. The old cupola that he complains of shows a great deal better practice in the amount of iron melted than I have met with in any examinations of cupolas I have ever made, and I took the trouble of making a comparison with some of about the size of the old cupola described in Mr. Scheffler's paper, and I will read a little of the data that I obtained. Here is N. S. Bouton's cupola in Chicago, 43 inches in diameter, that was charged with coke on an eight ounce blast. It melted 8.4 pounds of iron with one pound of coke, and was charged similar to the charge Mr. Scheffler reports in his new cupola, that is:

Bed, 800 lbs. coke,
2,000 lbs. iron,
200 lbs. coke,
2,000 lbs. iron,
Repeating to the last charge,
200 lbs. coke,
3,500 lbs. iron. They melted 10,764 lbs. per hour.

Mr. Scheffler's old cupola is, I believe, 44 inches in diameter.

In Tatum & Co.'s cupola, in Cincinnati, which was 44 inches in diameter, they required 17 ounces per square inch of blast, and melted only 6 pounds of iron to one pound of coke, and melted only 8,430 pounds per hour.

In another cupola, that of the American Bridge Co., in Chicago, a 44-inch cupola, eight-ounce blast, 6.3 pounds of iron for one pound of coke, and melting only 7,764 pounds per hour.

In looking over the question of cupolas, I have come to the conclusion that with about five or six thousand cupolas in this country, and every one of them charged in the best manner by men who have had experience of from thirty to forty years in charging cupolas, in every known and unknown method, and finally adopt-

as with this cupola and a blast of only 9 oz. the iron is melted faster than it is required. Of course the pressure is *gradually* increased to 9 oz., and does not reach this amount until about the middle of the heat, when it is gradually reduced. Only 4½-oz. pressure is used at the beginning of the heat.

Heats to the amount of 40,000 lbs. can be easily taken off, and it is very frequently done, and in considerably less time than was required for the old cupola when melting 34,000 lbs.

The location of the gauge was not changed from that which it occupied when connected to the old cupola, as it is situated directly between the two cupolas—the connecting pipe being simply transferred from the old to the new one, so that any chance for a differential reading to occur was entirely dismissed.

The larger diameter of the new cupola may have something to do with the increased amount of blast, as there is undoubtedly a greater total area between the pieces of coke and iron forming the charges than there was when the old cupola was used. The charging of both cupolas was the same in proportion to the amount to be melted.

I certainly think that excellent work was performed by the old cupola, for more was required of it than its real rated capacity, but something even better was desired, and it was certainly realized.

The proportion of iron melted to fuel consumed is from 7½ to 8 lbs. of the former to 1 lb. of the latter. Probably if more expensive fuel was used the proportion might be increased somewhat, but I doubt whether it would make sufficient difference to pay for the increased cost of the fuel. If any of the members can throw some light upon this subject I am sure it will be appreciated.

DISCUSSION.

The Chairman.—Mr. Snell, do you wish to add anything to the discussion which was had at the last meeting?

Mr. H. I. Snell.—I do not know that I have much to add to the discussion of this paper. Mr. Scheffler does not exactly answer the questions I asked. He has given the height of the tuyeres in the new cupola, and I asked for those in the old one. I suppose that perhaps they were too low down in the first case, and that partially accounted for the difference in the amount of iron melted

in the new cupola with the same blower as used on the old one. He says that the increased amount of blast was probably due to the larger area of the cupola and the greater distance between the particles of coal and iron. That, I think, conveys an erroneous impression. If he means the amount of increased pressure per square inch, it should have been more in the smaller cupola than it would have been in the larger one, from the fact that the pressure of blast from a fan blower diminishes as the delivery is enlarged after the enlargement exceeds the capacity of the fan. The amount of iron that he melts in the new cupola is about the usual proportion per pound of fuel. The old cupola that he complains of shows a great deal better practice in the amount of iron melted than I have met with in any examinations of cupolas I have ever made, and I took the trouble of making a comparison with some of about the size of the old cupola described in Mr. Scheffler's paper, and I will read a little of the data that I obtained. Here is N. S. Bouton's cupola in Chicago, 43 inches in diameter, that was charged with coke on an eight ounce blast. It melted 8.4 pounds of iron with one pound of coke, and was charged similar to the charge Mr. Scheffler reports in his new cupola, that is:

Bed, 800 lbs. coke,
2,000 lbs. iron,
200 lbs. coke,
2,000 lbs. iron,
Repeating to the last charge,
200 lbs. coke,
3,500 lbs. iron. They melted 10,764 lbs. per hour.

Mr. Scheffler's old cupola is, I believe, 44 inches in diameter.

In Tatum & Co.'s cupola, in Cincinnati, which was 44 inches in diameter, they required 17 ounces per square inch of blast, and melted only 6 pounds of iron to one pound of coke, and melted only 8,430 pounds per hour.

In another cupola, that of the American Bridge Co., in Chicago, a 44-inch cupola, eight-ounce blast, 6.3 pounds of iron for one pound of coke, and melting only 7,764 pounds per hour.

In looking over the question of cupolas, I have come to the conclusion that with about five or six thousand cupolas in this country, and every one of them charged in the best manner by men who have had experience of from thirty to forty years in charging cupolas, in every known and unknown method, and finally adopt-

as with this cupola and a blast of only 9 oz. the iron is melted faster than it is required. Of course the pressure is *gradually* increased to 9 oz., and does not reach this amount until about the middle of the heat, when it is gradually reduced. Only 4½-oz. pressure is used at the beginning of the heat.

Heats to the amount of 40,000 lbs. can be easily taken off, and it is very frequently done, and in considerably less time than was required for the old cupola when melting 34,000 lbs.

The location of the gauge was not changed from that which it occupied when connected to the old cupola, as it is situated directly between the two cupolas—the connecting pipe being simply transferred from the old to the new one, so that any chance for a differential reading to occur was entirely dismissed.

The larger diameter of the new cupola may have something to do with the increased amount of blast, as there is undoubtedly a greater total area between the pieces of coke and iron forming the charges than there was when the old cupola was used. The charging of both cupolas was the same in proportion to the amount to be melted.

I certainly think that excellent work was performed by the old cupola, for more was required of it than its real rated capacity, but something even better was desired, and it was certainly realized.

The proportion of iron melted to fuel consumed is from 7½ to 8 lbs. of the former to 1 lb. of the latter. Probably if more expensive fuel was used the proportion might be increased somewhat, but I doubt whether it would make sufficient difference to pay for the increased cost of the fuel. If any of the members can throw some light upon this subject I am sure it will be appreciated.

DISCUSSION.

The Chairman.—Mr. Snell, do you wish to add anything to the discussion which was had at the last meeting?

Mr. H. I. Snell.—I do not know that I have much to add to the discussion of this paper. Mr. Scheffler does not exactly answer the questions I asked. He has given the height of the tuyeres in the new cupola, and I asked for those in the old one. I suppose that perhaps they were too low down in the first case, and that partially accounted for the difference in the amount of iron melted

in the new cupola with the same blower as used on the old one. He says that the increased amount of blast was probably due to the larger area of the cupola and the greater distance between the particles of coal and iron. That, I think, conveys an erroneous impression. If he means the amount of increased pressure per square inch, it should have been more in the smaller cupola than it would have been in the larger one, from the fact that the pressure of blast from a fan blower diminishes as the delivery is enlarged after the enlargement exceeds the capacity of the fan. The amount of iron that he melts in the new cupola is about the usual proportion per pound of fuel. The old cupola that he complains of shows a great deal better practice in the amount of iron melted than I have met with in any examinations of cupolas I have ever made, and I took the trouble of making a comparison with some of about the size of the old cupola described in Mr. Scheffler's paper, and I will read a little of the data that I obtained. Here is N. S. Bouton's cupola in Chicago, 43 inches in diameter, that was charged with coke on an eight ounce blast. It melted 8.4 pounds of iron with one pound of coke, and was charged similar to the charge Mr. Scheffler reports in his new cupola, that is:

Bed, 800 lbs. coke,
2,000 lbs. iron,
200 lbs. coke,
2,000 lbs. iron,
Repeating to the last charge,
200 lbs. coke,
3,500 lbs. iron. They melted 10,764 lbs. per hour.

Mr. Scheffler's old cupola is, I believe, 44 inches in diameter.

In Tatum & Co.'s cupola, in Cincinnati, which was 44 inches in diameter, they required 17 ounces per square inch of blast, and melted only 6 pounds of iron to one pound of coke, and melted only 8,430 pounds per hour.

In another cupola, that of the American Bridge Co., in Chicago, a 44-inch cupola, eight-ounce blast, 6.3 pounds of iron for one pound of coke, and melting only 7,764 pounds per hour.

In looking over the question of cupolas, I have come to the conclusion that with about five or six thousand cupolas in this country, and every one of them charged in the best manner by men who have had experience of from thirty to forty years in charging cupolas, in every known and unknown method, and finally adopt-

as with this cupola and a blast of only 9 oz. the iron is melted faster than it is required. Of course the pressure is *gradually* increased to 9 oz., and does not reach this amount until about the middle of the heat, when it is gradually reduced. Only 4½-oz. pressure is used at the beginning of the heat.

Heats to the amount of 40,000 lbs. can be easily taken off, and it is very frequently done, and in considerably less time than was required for the old cupola when melting 34,000 lbs.

The location of the gauge was not changed from that which it occupied when connected to the old cupola, as it is situated directly between the two cupolas—the connecting pipe being simply transferred from the old to the new one, so that any chance for a differential reading to occur was entirely dismissed.

The larger diameter of the new cupola may have something to do with the increased amount of blast, as there is undoubtedly a greater total area between the pieces of coke and iron forming the charges than there was when the old cupola was used. The charging of both cupolas was the same in proportion to the amount to be melted.

I certainly think that excellent work was performed by the old cupola, for more was required of it than its real rated capacity, but something even better was desired, and it was certainly realized.

The proportion of iron melted to fuel consumed is from 7½ to 8 lbs. of the former to 1 lb. of the latter. Probably if more expensive fuel was used the proportion might be increased somewhat, but I doubt whether it would make sufficient difference to pay for the increased cost of the fuel. If any of the members can throw some light upon this subject I am sure it will be appreciated.

DISCUSSION.

The Chairman.—Mr. Snell, do you wish to add anything to the discussion which was had at the last meeting?

Mr. H. I. Snell.—I do not know that I have much to add to the discussion of this paper. Mr. Scheffler does not exactly answer the questions I asked. He has given the height of the tuyeres in the new cupola, and I asked for those in the old one. I suppose that perhaps they were too low down in the first case, and that partially accounted for the difference in the amount of iron melted

in the new cupola with the same blower as used on the old one. He says that the increased amount of blast was probably due to the larger area of the cupola and the greater distance between the particles of coal and iron. That, I think, conveys an erroneous impression. If he means the amount of increased pressure per square inch, it should have been more in the smaller cupola than it would have been in the larger one, from the fact that the pressure of blast from a fan blower diminishes as the delivery is enlarged after the enlargement exceeds the capacity of the fan. The amount of iron that he melts in the new cupola is about the usual proportion per pound of fuel. The old cupola that he complains of shows a great deal better practice in the amount of iron melted than I have met with in any examinations of cupolas I have ever made, and I took the trouble of making a comparison with some of about the size of the old cupola described in Mr. Scheffler's paper, and I will read a little of the data that I obtained. Here is N. S. Bouton's cupola in Chicago, 43 inches in diameter, that was charged with coke on an eight ounce blast. It melted 8.4 pounds of iron with one pound of coke, and was charged similar to the charge Mr. Scheffler reports in his new cupola, that is:

Bed, 800 lbs. coke,
2,000 lbs. iron,
200 lbs. coke,
2,000 lbs. iron,
Repeating to the last charge,
200 lbs. coke,
3,500 lbs. iron. They melted 10,764 lbs. per hour.

Mr. Scheffler's old cupola is, I believe, 44 inches in diameter.

In Tatum & Co.'s cupola, in Cincinnati, which was 44 inches in diameter, they required 17 ounces per square inch of blast, and melted only 6 pounds of iron to one pound of coke, and melted only 8,430 pounds per hour.

In another cupola, that of the American Bridge Co., in Chicago, a 44-inch cupola, eight-ounce blast, 6.3 pounds of iron for one pound of coke, and melting only 7,764 pounds per hour.

In looking over the question of cupolas, I have come to the conclusion that with about five or six thousand cupolas in this country, and every one of them charged in the best manner by men who have had experience of from thirty to forty years in charging cupolas, in every known and unknown method, and finally adopt-

ing the method they now use, every one has the best method, and yet I find that there are no two of them alike, and I think it would be an interesting subject for some one to investigate the method of charging a cupola furnace to see if there could not be a more uniform system applied to it.

Mr. W. F. Durfee.—I have recently been making some studies on the subject of the construction of cupolas, and in connection therewith I have run across a very able paper by a French engineer (M. A. Gouvy, Jr.), and of which I have made a translation, which is about being published in the journal of the Franklin Institute. I think that paper embraces the most complete history of the progress of the development of cupola construction which has yet been written. There is no doubt in my mind that the majority of cupolas in use in this country waste more fuel than is necessary to do the work. The amount of carbonic oxide that is seen burning at the throat of most of our cupolas is more than sufficient, if properly consumed, to do the melting in the cupola itself, and the latest improvement in cupola construction abroad has been made with reference to the entire consumption of this carbonic oxide in the body of the cupola. This improvement is the invention of European engineers, Messrs. Greiner & Erpf, and it consists mainly in this: that in addition to the ordinary tuyeres at the usual level, there is a series of vertical pipes connected with the wind box. These vertical pipes are rather small in diameter, and at intervals their upper ends are connected by suitable small tuyeres with the shaft of the cupola. These auxiliary tuyeres, in the case of a 42-inch cupola, are about 15 in number, and the blast is introduced not at any one level, but at a series of points following a helicoidal curve embracing the body of the cupola. The effect of the introduction of air in this way is this, as the carbonic oxide (generated in the cupola by the decomposition of the carbonic acid) rises through the body of the fuel, it meets, from time to time, a sufficient amount of air to consume it, so that in a cupola constructed after this system there is no escape of carbonic oxide at the throat of the cupola at all. The whole mass of the carbonic oxide is consumed in the cupola itself, and in the upper portion of the cupola this consumption of carbonic oxide has the effect of gradually heating up the charge and preparing it for more economical melting when it gets down to the zone of fusion, and I apprehend from the result of my investigations that that is a very important thing. I have such faith in its value that I propose to build a cupola on that system, and if suc-

cessful I shall take great pleasure in presenting the results of my experience with it to the society. (Applause.)

Mr. Frank Firmstone.—I would like to ask Mr. Durfee whether the Greiner & Erpf cupola has ever been tried in practice.

Mr. Durfee.—In this paper by M. A. Gouvy, Jr., when published in the journal of the Franklin Institute, you will find a table of some thirty odd cupolas of various construction, giving the results of the experience with them all; and among the rest there are some statements in regard to the economies of the Greiner & Erpf system. There is quite a number of those cupolas in operation in Europe.

Mr. Firmstone—Precisely the same scheme has been proposed over and over again for blast furnaces, and has been tried without success. It is exceedingly difficult to see how by attempting to burn the carbonic oxide in contact with the mass of the fuel, thereby raising the temperature of the combustion, you are going to avoid a re-formation of the carbonic oxide. Practically, I should say, it would be impossible to burn carbonic oxide in the presence of the coal and not have carbonic oxide left in a short time.

Mr. Durfee.—If the blast was introduced at a uniform level, that would be true. But the blast is not introduced at a uniform level. These auxiliary tuyeres effect an entrance into the cupola at successively higher levels, so that the carbonic oxide is continuously burned as it is formed, there being none finally left to be consumed at the throat of the furnace.

Mr. H. H. Suplee.—In this connection I might cite the case of the alteration of a cupola in Philadelphia, in which a second set of tuyeres was introduced—about 18 inches higher than the original set. They were connected with them by separate blast gates so that they could be turned off or on independently, and were pointed downward at a slight angle. The blast was started with the original set of tuyeres, and at a short interval after—I cannot state exactly the time, the blast was turned on to the second set. The idea originated with the foreman of the foundry, who thought he could obtain better results in that way. Although I have no figures, I know that the output and the time were both materially improved, the heat being handled in a shorter time and the cupola being capable of handling a larger charge. They built an entirely new set of tuyeres, with connections, in a separate box, built about the base of the cupola about 18 or 20 inches above the original tuyeres, introducing the second blast, as Mr. Durfee describes, at a higher

point. This was about three or four years ago. I believe it is still in operation.

Mr. W. M. Barr.—About seven years ago, I built two cupolas for foundry service. As I now recollect them, one was 4 feet in diameter, and the other 5 feet. These cupolas were fitted with a double set of tuyeres, four large ones at the bottom, and, I believe, nine at the top. The distance from center to center being about 18″. The object of this double set of tuyeres was to obtain a better combustion than was thought to be possible with one set.

It is well known that carbonic acid gas is the product of perfect combustion. This gas in passing up through an incandescent body of fuel will take up additional carbon, and is thereby changed into carbonic oxide gas. These upper tuyeres were intended to supply air, and by means of a second zone of combustion re-convert the carbonic oxide gas into carbonic acid gas, and thus effect a saving of some 10,000 heat units per pound of coal, and take advantage of the heat thus obtained to increase the efficiency of the cupola. Both of these cupolas were very successful in their operation, and a very considerable economy was had by this arrangement of tuyeres, the result being a melting of about ten pounds of iron per pound of Connellsville coke. This is about three pounds more than I had been able to obtain on an average with single tuyeres. The working of the cupola was satisfactory, but it did not wholly prevent the formation of carbonic oxide gas, but as this gas was formed above the second zone of combustion, we cared but little about it, because the work was practically accomplished, and the little loss of heat which occurred was of no consequence.

Mr. Durfee.—The results which have been described by Mr. Barr were doubtless due to the combustion of a large proportion of the carbonic oxide generated, and the reason why the carbonic oxide was not *all* consumed was because the air was introduced at a fixed plane. In order to consume all the carbonic oxide it is necessary to introduce air continuously at varying levels, so that as fast as the carbonic oxide developed by the decomposition of the carbonic acid is formed, it meets with air to reconvert it into carbonic acid again, which operation must be successively performed in order to consume the whole of the carbonic oxide developed.

CCCXV.

ELECTRIC WELDING.

BY C. J. H. WOODBURY, BOSTON, MASS.
(Member of the Society.)

THE smith is the highest type of handicraftsman; he alone of all artisans making his own tools and also those of others, commands the dependence of all upon his offices. His work is prehistoric, reaching beyond records or traditions and known to have existed in still earlier times through the personifications of mythology, wherein Vulcan was essential to other divinities. The blacksmith is a factor in every stage of the history of mankind; and his work is now, and always has been a matter of individual skill depending upon a keen eye and steady hand, with a fine sense of form and dimension, untouched by the flood of invention which has modified or even recast other methods of production.

It is true that machinery is used in welding, but it is merely devoted to the application of power to supplement the limits of human strength; and with trip-hammer and crane the same skill is necessary as with hammer and anvil.

Since the first of the year there has been a commercial application of electric welding, the invention of Prof. Elihu Thomson, which has already reached a degree of importance sufficient to render it a live issue in every branch of manufacture to which it has been shown to be applicable.

This process is a new art, for unlike the smith who is confined to iron, steel and platinum, it can weld any two pieces of the same metal or alloy ranging from the most refractory metals to the alloy which fuses at 162° Fahr. It will join dissimilar metals when the welding point of one is not too far in excess of the fusion point of the other.

These results seem to indicate that the classification of metals into welding and non-welding has been due to imperfections in the ordinary and time-honored methods, rather than any peculiarity in physical constitution warranting such arbitrary classification.

It is true that some of the metals have been joined without sol-

der by means of the autogenous soldering process, wherein local fusion is produced with an oxyhydrogen blowpipe, but that laboratory experiment is not a union of metals heated to a plastic condition which precedes fusion, according to the accepted meaning of welding.

Passing by the scientific interest of electric welding, a short allusion will be made to the principles upon which it is based as preliminary to a description of the apparatus, and then consideration will be given to its practical applications.

THE PRINCIPLES.

All forms of matter possess in varying degree the susceptibility of permitting the molecular motion necessary for the transfer of electric energy; those whose characteristics are favorable for such motion being termed conductors, and those which do not readily permit such motions are called non-conductors or insulators; and various adjectives are frequently used to express in a general way some sense of their value, but throughout the whole list of all known matter, there is some measure of conductivity, and the whole expression is one of degree; the conductivity of silver, for example, being over one hundred billion times that of glass; and other materials possess measures of conductivity lying between these extremes. The ability of any body to conduct electricity in comparison with others of its kind is directly as the area of the cross section and inversely as the length.

Whenever electricity is provided with what is termed a good conductor, it makes no manifestation of its presence, but if there is poor conductivity by reason of small cross section or poor conductivity of the material, there is resistance to the electricity. Then a portion of the electric energy is expended in producing excessive molecular motion, and converted into heat, which is radiant if the
ıre is high enough, as in the case of the incandescent
ıt, ıen the metal portion of the circuit possesses ample con-
a tivity to carry the electricity without appreciable heating, but
t bon filament in the lamp is a poor conductor, both in regard
cha teristics of the material and small cross section,
lar motion is so violent as to produce a temperature
to contain light rays.
of mechanical work done by a current C in
e R during a time T, is RC^2T; and the

equivalent amount of heat is obtained by dividing the expression by J, the mechanical equivalent of heat.

$$H = \frac{RC^2T}{J}.$$

In an induction coil, electricity of large current and low pressure is converted into an equivalent electrical energy of small current and high pressure, by means of a bar of soft iron or a bundle of wires, wrapped with two coils of insulated wire of different lengths and diameters. An alternating current being sent through the shorter wire alternately magnetizes and demagnetizes the iron bar with reversed magnetic polarity, and reversals of magnetism in this bar in turn produce an alternating current in the circuit of which the secondary coil is a portion; the secondary current being as stated above of high potential and small quantity.

By suitable structural changes, an induction coil can be inverted as to its functions, and used to convert small electric currents into large ones, with inverse changes in potential.

THE APPARATUS.

The electricity is generated by one of two methods. In the direct system, the dynamo is contained in the machine below the clamps, and the armature contains two windings; the one being a fine winding which is in series with the field magnet coils, and the other winding being merely a bar of copper in the form of a letter *U* or less than a single coil. This bar being of very low resistance, the maximum current is sufficient for welding purposes, and the terminals are connected directly to the copper clamps. Alternating currents are generated in this machine, and used for welding, in order to avoid commutators, which are necessary in direct current machines. It should be remembered that in all dynamos the electricity is generated in alternating currents, and that these currents are in proper turn fed to brushes of opposite polarity, and thus rendered continuous. In an alternating current dynamo, the electricity is conducted from the armature to rings instead of to a commutator, and is thus better suited for large currents, and some forms of the apparatus do not require rings or any moving contacts. There is no electrical reason why an alternating current should be used except the convenience of its manipulation. In fact, the con-

tinuous current supplied by secondary batteries has been used for this purpose.

Another form of apparatus termed the indirect system is more conveniently suited for large work, or in places where a number of welding machines are operated by the current from a single dynamo. The welding current is produced by conversion of the comparatively high tension current by means of an inverted induction coil, termed a transformer. The primary circuit from the dynamo is conducted through many turns of fine wire wound around a soft iron ring, and upon this same ring is a single turn of a large copper bar in which the welding current is produced by inductive effect. These currents receive 4,000 to 15,000 alternations per minute. The welding currents are not changed suddenly or by switches, as such manipulation would not be desirable or even practicable with the great currents used; but in the direct welding machine, a set of resistance coils is placed in the fine circuit which passes around the field magnets, and by interposing more or less of the resistance coils in this circuit, the strength of the magnets is diminished or increased, and the welding current altered accordingly.

With the indirect machine, the amount of the secondary or welding current is controlled by varying the current in the primary coil by means of a kicking coil, or by a variable shunt to the field coils and in other ways.

In either case the apparatus is simple and ir full and complete control at will of the operator by movement of a lever, and this action controls the heat.

THE PROCESS.

In the electric welding process, the two pieces to be joined are secured in firm end contact by a pair of adjustable copper clamps which are placed upon the top of the apparatus. An electric current of large volume is passed through the pieces, and the contact between them being of less conductivity than the homogeneous metal, heating ensues at this place, as the juncture is brought to the proper temperature by the gradual motion of the regulating lever, and as the metal softens, the clamps are pressed towards each other to insure a continuous metallic union across the bar.

The weld begins at the center and proceeds radially towards the surface, as the temperature becomes greater than at the interior.

The heating is further increased by the fact that the resistance of the hot metal is greater than that of cold metal.

The enormous electric currents used in this welding process sometimes reach 50,000 amperes, but with an electro-motive force of half a volt, and therefore not capable of giving any sensation to a person.

It would be injudicious to offer any premium upon ignorance, but the operation of electric welding is one of the simplest of mechanical processes, requiring but little skill on the part of the operator in comparison with that exact training of hand and eye and long experience necessary for ordinary welding. The operator must understand the color of the proper welding heat of the metal under treatment, but this is readily learned. The work is not manipulated during the process, except when it is desired to reduce the burr at the weld, and is at all times under observation, and its heat subject to entire control by means of a lever which graduates the strength of the current.

The dynamo generating the electricity is self-regulating, and requires no attention except for lubrication.

There is no unnecessary waste of fuel, the heating being local, and does not extend far from the weld; cotton-covered wire one-fourth of an inch in diameter can be welded without searing the insulation over three-fourths of an inch from the weld.

The time for making a weld varies from a fraction of a second to about two minutes, according to the work; although nothing over two inches diameter has yet been welded, but larger machines are in process of construction.

It is not necessary to provide motive power fully equal to the maximum demand, as the time is so short that the momentum of a flywheel will serve the same purpose as in a drop press, and give up the surplus energy required.

The power is inversely proportional to the time and appears to be about proportional to the 2.3 power of the diameter in inches, with a slight variation in favor of quick work caused by differences in rates of thermal conductivity of the material.

APPLICATIONS.

The process is far cheaper than that of hand welding, and also extends to other methods of manufacture, but the comparative expense differs according to the previous conditions in every place where it has been applied thus far.

Its applications in practical work thus far have been confined to butt welding for many purposes, such as continuous wire work, carriage work, axles and tires, cotton bale ties, barrel hoops and wire cables and many miscellaneous purposes. Axes are made of drop forgings, joining the tool steel edge to a mild steel poll, bars are heated in the middle and upset forming collars, and pipes are joined together—a matter of great value in ice machines. The list might be continued to greater length, but this indicates the range of its practical uses at this early day.

STRENGTH OF ELECTRIC WELDS.

The value of the process, for most purposes, independent from any scientific interest or mechanical ingenuity shown in the apparatus, must be that of the resistance of the welds under tensile stress.

It will be readily understood however, that, as this process accomplishes many things hitherto impossible, aside from any question of ultimate strength, it is fitted for applications in many constructions where it saves labor and time; provided only that the joints be in all cases sufficiently good for the purpose for which the article is designed. A large field thus opens up in the execution of ornamental design in metal work, where it will supplant screws, rivets or solder for fastenings, and in other evident applications.

There is no reason why such a weld should be stronger than the rest of the bar, but if averaging of equal strength, some of the breaks would occur at the weld. There have been many tests made on various testing machines, but it has been considered preferable to submit only the official record of tests made on the Emery Testing Machine at the U. S. Arsenal at Watertown, Mass.

ORDNANCE DEPARTMENT, U. S. A. REPORTS OF TESTS BY TENSION OF BARS JOINED BY ELECTRIC WELDS, AT THE TESTING MACHINE, U. S. ARSENAL, WATERTOWN, MASS.

				Sectional Areas.				Tensile Strength.				
Test No.	Marks.	Metal.	Total Length	At Weld.		Of Bar.		Total Lbs.	Lbs. sq. in. in bar.	Position of Fracture.	Appearance of Fracture.	Remarks.
			Ins.	Inches.	Sq. In.	Inches	Sq. In.					
4695	.....	Wrt. Iron.	31.75	1.74 diam. =	2.39	1.50 diam. =	1.77	79,640	45,070	3¼ in. from middle of weld.....	Fibrous gr. spot at circumference.....	Weld finished with hammer
4696	.....	"	36.25	1.22 "	1.17	1.24	1.21	57,900	49,500	At weld.....	Gr.....	" " " "
4697	.....	"	36.	1.00 "	7.85	1.00	7.85	42,690	54,380	3 inches from weld....	Fibrous.....	" " " "
4698	.....	"	11.9	Not welded		1.02 × .40 =	.408	21,920	53,730	.....	"	Has been heated at middle.
4699	.....	"	11.9	"		1.02 × .40 =	.408	21,840	53,530	.....	"	" " " "
4700	.....	"	11.9	"		1.02 × .40 =	.408	22,780	55,830	.....	"	" " " "
4701	H. D.	"	13.	1.02 × .40 =	.408	1.02 × .40 =	.408	20,100	49,260	At weld.....	"	.....
4702	H. D.	"	12.8	1.02 × .40 =	.408	1.02 × .40 =	.408	21,020	51,520	"	"	.....
4703	H. C.	"	12.8	1.17 × .48 =	.562	4.02 × .40 =	.408	21,820	53,480	3 inches from weld....	"	.....
4704	H. C.	"	12.9	1.14 × .45 =	.513	1.02 × .40 =	.408	21,810	53,480	At weld.....	Dull Fibrous, in part gr...	.....
4705	H. H.	"	12.9	1.13 × .49 =	.513	1.02 × .40 =	.408	20,400	50,000	"	" " and spongy	12,000 lbs. comp. accid'tly appl'd before tension test.
4706	H. H.	"	12.9	1.18 × .51 =	.602	1.02 × .40 =	.408	22,240	54,510	2¼ inches from weld...	Fibrous.....	.....
4707	W.	"	12.8	1.18 × .47 =	.555	1.02 × .40 =	.408	21,780	53,380	3.7 " " "	"	.....
4708	.....	"	12.	Not welded		.50 diam. =	.196	12,520	63,880	.....	"	Has been heated at middle.
4709	.....	"	12.	"		.50 "	.196	11,160	56,940	At the grip.	"	" " " "
4710	.....	"	12.2	"		.50 "	.196	10,520	53,670	.....	"	" " " "
4711	H. D.	"	13.2	.49 diam. =	.189	.50 "	.186	7,690	39,230	At weld.....	Dull fibrous, part of surface smooth.....	.....
4712	H. D.	"	13.35	.50 "	.196	.50 "	.196	9,980	50,920	"	Dull fibrous, and spongy..	Started fine crack at weld.
4713	H. H.	"	13.2	.60 "	.283	.50 "	.196	10,260	52,350	1½ inch from weld.....	Fibrous.....	Fractured at weld at the anvil by bending cold.
4714	H. H.	"	13.2	.60 "	.283	.50 "	.196	10,280	52,450	1.6 " " "	"	
4715	H. C.	"	13.35	.56 "	.246	.50 "	.186	11,080	56,530	1.75 " " "	"	Fibrous, part of surface smooth.
4716	H. C.	"	13.2	.61 "	.292	.50 "	.190	10,270	52,400	1.8 " " "	"	
4717	P. W.	"	13.1	.67 "	.353	.50 "	.196	11,170	56,990	1.5 " " "	"	.....
4718	P. W.	"	13.2	.67 "	.353	.50 "	.196	10,060	51,330	1.7 " " "	"	.....
4719	P. W.	"	13.2	.69 "	.374	.50 "	.196	10,120	51,630	1.5 " " "	"	.....
4720	.....	"	16.1	Not welded.		.62 "	.302	15,700	51,990	.....	"	.....
4721	.....	"	16.	"		.62 "	.302	17,980	59,540	.....	"	.....
4722	.....	Octagonal Steel.	16.	"		.66 "	.360	45,800	127,220	.....	Fine gr. radiating from a spot at circumference...	.....
4723	.....	"	16.	"		.66 "	.360	45,670	126,860	At face of grips.....	Fine gr. radiating from a spot at circumference...	.....

REPORTS OF TESTS—*continued.*

Test No.	Marks.	Metal.	Total Length	Sectional Areas. At Weld. Inches.	Sectional Areas. At Weld. Sq. In.	Sectional Areas. Of Bar. Inches.	Sectional Areas. Of Bar. Sq. In.	Tensile Strength. Total Lbs.	Tensile Strength. Lbs. sq. in. in bar.	Position of Fracture.	Appearance of Fracture.	Remarks.
4724	.....	Octagonal Steel.	15.75	.66 diam. =	.360	.66 diam. =	.360	27,500	76,390	At Weld	Coarse gr.	
4725	.....	"	16.	.67 "	.372	.66 "	.360	22,900	63,610	"	Coarse gr., yellow cast at circumference	
4726	.....	"	16.	.80 "	.531	.66 "	.360	32,550	90,420	At end of enlarged section of weld	Coarse gr.	
4727	.....	"	16.	.78 "	.502	.66 "	.360	37,800	105,000	At end of enlarged section of weld	" "	
4728	Octagonal Steel & Wrt. Iron		16.	.65 "	.332	.63 "	.328	17,100	52,130	In iron, 3 in. from weld	Fibrous	
4729	.....	"	16.	.75 "	.442 iron	.63 "	.328	17,070	52,040	" 2.3 " " "	" seamy	
4730	.....	"	16.	.77 "	.466	.63 "	.328	16,950	51,680	" 2.8 " " "	"	
4731	.....	Copper	12.	Not welded	.....	.373 "	.109	3,580	32,840			
4732	.....	"	12.	"	.....	.373 "	.109	3,540	32,480			
4733	.....	"	12.	"	.....	.373 "	.109	3,530	32,390			
4734	D.	"	11.75	.380 diam. =	.113	.373 "	.109	3,210	29,450	At weld		
4735	D.	"	11.80	.380 "	.113	.373 "	.109	3,390	31,100	"		
4736	D. H.	"	11.8	.372 "	.109	.373 "	.109	3,470	31,830	"		
4737	D. H.	"	11.8	.379 "	.113	.373 "	.109	3,590	32,940	½ inch from weld		
4738	P. W.	"	11.85	.51 "	.204	.373 "	.109	3,540	32,480	½ " " "		
4739	P. W.	"	11.80	.50 "	.196	.373 "	.109	3,570	32,750	.85 " " "		
4740	.....	Brass	12.	Not welded	.....	.374 "	.110	5,240	47,640			Has been heated at middle
4741	.....	"	12.	"	.....	.374 "	.110	5,275	47,950			Have been heated at mid.
4742	.....	"	12.	"	.....	.374 "	.110	5,240	47,640			
4743	D.	"	11.8	.375 diam. =	.110	.374 "	.110	4,490	40,820	At weld		
4744	D.	"	11.8	.375 "	.110	.374 "	.110	5,250	47,730	½ inch from weld		
4745	P. W.	"	11.9	.50 "	.196	.374 "	.110	5,270	47,910	½ " " "		
4746	P. W.	"	11.8	.50 "	.196	.374 "	.110	5,270	49,910	.80 " " "		
4747	.....	Brass & Wrt Ir.	10.3	.374 "	Brass	.374 "	.110	1,920	17,450	At weld		
4748	.....	"	11.5	.374 "	Brass	.374 "	.110	3,690	33,550	"		
4749	Steel	& German Silver	9.15	.33 "	.086	.250 "	.049	1,980	40,410	"		
4750	D.	Copper	11.9	.378 "	.112	.373 "	.109	3,520	32,290	"		
4751	P. W.	Wrt. Iron	13.25	.68 "	.363	.50 "	.196	11,420	58,370	1.3 inch from weld.	Fibrous	
4752	P. W.		13.15	70 "	.385	.60 "	.196	10,410	53,110	1.7 " " "	"	

4753. A chain made of three links of .50 in. diam. Wire. Two welds in each link at the sides. Tensile strength, 17,900 lbs. Fractured middle link in the quarter 1.60 in. from weld. Appearance fibrous.

Test Number.	Marks.	Metal.	Total Length.	Diameters.		Sectional Areas.		Tensile Strength.		Position of Fracture.	Appearance of Fracture.
				At Weld.	Of Bar.	At Weld.	Of Bar.	Total Lbs.	Lbs. per sq. in. on Bar.		
			Ins.	Inches.	Ins.	sq. in.	sq. in.				
4779	1 L	Steel	15.6	.504	.503	.200	.199	15,290	76,830	At weld	Gr. medium coarse.
4780	2	"	15.4	.62	.500	.302	.196	21,700	110,710	8 inches from weld	Gr. fine, dull center.
4781	3	"	14.1	.500	.498	.196	.195	14,590	74,820	At or near weld	In part smooth and part gr.
4782	C.	"	18.1	Not welded.	.502	.....	.198	18,900	75,450	Near end of heated sec'n.	Fine gr., dull center.
4783	H.	"	15.25	.62	.500	.302	.196	20,420	104,180	9 inches from weld	Fine gr., dull center.
4784	C*	Octagonal Steel.	19.6	.82	.55	.557	.250	31,190	124,760	At weld	Dull spongy, irregular dark spots.
4785	D.	"	19.8	.58	.55	.278	.250	33,580	134,320	At weld	Gr. medium coarse.
4786	H. D.	"	19.7	.55	.55	.250	.250	32,350	129,400	3 inches from weld	Fine gr. rad. from dull spot at circ.
4787	H. D.	"	19.8	.55	.55	.250	.250	33,700	134,800	At weld	Gr. medium coarse.
4788	.....	Steel	16.	Not welded.	.62	.....	.302	19,610	64,930	.....	Fine silky.
4789	P. W.	"	15.9	.80	.62	.503	.302	19,490	64,540	9 inches from weld	Fine silky.
4790	D.	"	15.8	.62	.62	.302	.302	19,020	62,980	At weld	Gr. medium coarse.
4791	.....	Wrought Iron.	16.1	Not welded.	.63	.....	.312	16,360	52,440	.....	Fibrous.
4792	H. D.	"	16.1	.63	.63	.312	.312	16,280	52,180	At or near weld	Fibrous, light colored at circ.
4793	D.	"	16.	.63	.63	.312	.312	16,160	51,790	At or near weld	Fibrous.
4794	H.	"	16.25	.72	.63	.407	.312	16,750	53,690	2,4 inches from weld	Fibrous, seamy.
4795	H. D.	"	16.25	.76	.76	.454	.454	24,550	54,070	At weld	Gr. at circ., dull center.
4796	H.	"	16.1	.88	.76	.608	.608	25,590	42,100	2 inches from weld	Fibrous.
4797	H.	"	16.4	.81	.76	.515	.515	25,390	49,300	2 inches from weld	Fibrous.
4798	H. D*	Steel	15.5	.509	.502	.203	.198	15,300	77,270	At or near weld	Gr. medium coarse.

Correct.
J. E. HOWARD.

F. H. PARKER,
Lieut.-Col. Ordnance Dept. U. S. A., Commanding.

DISCUSSION.

Mr. Wm. Kent.—Please explain how a ring or hoop can be electrically welded from a bar or strip of metal. What prevents the current going around the ring through the solid metal, rather than across the joined ends?

Mr. Woodbury.—The resistance of a conductor is inversely as the length, other things being equal. In welding a ring by this process, a bar is bent to the form of a circle or other closed curve, the clamps holding the bar near to its juncture and the distance between the clamps will be as small as practicable; for example, it may be $\frac{1}{20}$ of the circumference of the circle. Then disregarding the varying conditions of conductivity, at the weld during the process of welding, $\frac{19}{20}$ of the electricity will pass from one side to the other through the point of juncture, and only $\frac{1}{20}$ of it will go around the longer side. As I stated in the course of the paper, the heating effect is proportional to the square of the current and other conditions, and therefore the union between the joined ends of the rod will be heated to a welding point, while the rest of the loop will not be appreciably warmed. I have in my hand a small ring $\frac{5}{8}$ of an inch in diameter, welded by electricity, and a number of them of various sizes are among the examples of welding shown. It is in practical use for much larger work of this nature, such as spinning rings and carriage tires being joined by this process.

Mr. Oberlin Smith.—I visited the laboratory of the Thomson Welding Company a few weeks ago, and staying there and working over their machines for an hour or two, I saw several very interesting experiments tried. Among others which I tried myself was the welding or soldering together of two pieces of ordinary tin plate, each piece perhaps the size of half a dollar. It is really welding, of course, but the metal has to be brought to a heat due only to the melting temperature of tin, rather than iron, because it is the tin surfaces that are melted together rather than the iron beneath. Thus we may call it either soldering or welding, although there was no artificial solder used—nothing but the ordinary coating of the tin plate. It seemed to unite perfectly and make an excellent flat joint. The whole surface was pressed together, or sweated together, as the term is with tin men. The field in which I was working was the soldering of certain articles together, if possible, by electricity, which now are soldered by "heat and pressure." They are laid together with a

little hot soldering iron put on the top of the two pieces of tin plate and then pressure is put upon them, until the heat has melted the solder sufficiently—until the pieces are fastened together—soldered by the tin coating that is on them. I think that probably the electric welding may be a perfect substitute for this process—saving the trouble and non-uniform results due to putting the variably heated blocks of hot iron on to supply the heat.

I saw another very interesting thing where a piece of steel about an inch thick was put between the copper clamps constituting the poles of the machine, which were, I think, an inch and a half in diameter. The part between the clamps being in the path of the current was brought up to a bright red, the color spreading out very little further than the edge of the copper pole but extending clear through, the other adjacent parts remaining perfectly black for several seconds.

Such isolation of the heat is certainly very wonderful, and may be very useful in other processes than welding.

I was also interested in this ring business and I saw pieces bent up and welded together without the current trying to run away. Prof. Thomson, in explaining this, of course mentioned the principle that has just been explained, namely, that most of the heat went through between the poles at the joint, because the distance was so much shorter. But I want to criticise Mr. Woodbury's statement, saying that the amount of current going around the other way will be in inverse proportion to the current going through the weld according to the distance. Of course that would be the case (the cross section being uniform) if at the weld the conduction was perfect—if it was as good there as it is the rest of the way around. Then the amount of current going around and across would be exactly in inverse proportion to the distances across the weld and around the other way. But when you commence to weld, the joint is not nearly so good a conductor, because there is a break in the metal and the two surfaces are only touching each other. After a while, as the ends are pressed together and begin to weld, the metal becomes heated there, as has been explained, and is a poorer conductor, so we have two reasons for its conducting less current at that point—its being warm, and its not being in perfect contact. After a while, as the union spreads outward, the conduction becomes better by reason of more cross section. In practice, they make the pieces to be welded convex, so that they touch at the center first. This presses

and squeezes out the melted flux and all the oxides and other impurities that there are in the joint. As the bars are pushed together by pressure the metal yields a little and the impurities are squeezed out and dropped down, and finally all the surfaces to the outside are welded. By that means they know there is a perfect joint. Otherwise, if the joint were welded on the outside first the metal would contain the impurities penned up in the middle, and there would be an imperfect weld. But, speaking further about the amount of current going around a ring, when we commence there is the bad conduction due to the joint, and after it begins to heat that due to the hot metal; then, as it begins to weld in the middle, the conduction becomes better, and finally this extends clear to the outside. Then we have the condition of the metal being all one piece but hot, and even then, and until the thing is perfectly cold, the conduction is not as good there as elsewhere. Therefore it seems to me (the distance between the poles being, say one-twentieth of the whole circumference) that more than one-twentieth of the current would go around the other way. I do not know what proportion. It evidently depends upon the relative conductibility of the metal when hot and cold. If I am not right I should like to be corrected by Mr. Woodbury.

The Chairman.—Mr. Pope was asked to discuss the subject.

Mr. Ralph W. Pope.—Some of the points which I wished to discuss have already been touched upon; for instance, the welding of a ring, and the shape of the abutting ends. But there have been various questions and surmises as to the practicability of the electric welding process. One practical mechanic of national reputation, and familiar with electrical work, has stated that he thought the metal liable to be burned. I wish to say in reply to this criticism, that we should not confound this process in any respect with the electric arc, as seen in the arc-light, which, as we all know, will fuse any metal. The conditions are entirely different, the current used in welding being of very low tension. The question asked in regard to the ring was a very natural one to put regarding this process. Suffice it to say that such work is actually done, and we have samples of it here to-night. I notice, however, in these samples that the links of the chains as ordinarily made have two joints. I wish to inquire of Mr. Woodbury in regard to the burr—whether it can be reduced in the manipulation, so as to bring the weld down to a size uniform with that of the bars joined. This process, as you know, has been

brought out in the electrical field. It has been touched upon by various electrical societies, and has been discussed in the electrical journals, but it properly belongs to the domain of the mechanical engineer. The process was invented, and has been developed by one of the brightest electrical men in the field today, who I am sure would not have induced the investment of capital for the building of expensive machinery unless he was certain that there was something in it. In regard to the burning of the metal, if I may be permitted, I will read a letter from Professor Dolbear, which is quite interesting, and is supported by the tests which have been made later. This letter was in reply to an inquiry from the editor of the *Engineering and Building Record*, who had seen a statement that a certain European process of welding had burned the metal. He referred this paragraph to Professor Dolbear, who replied as follows:

COLLEGE HILL, MASS., *Feb.* 5, 1888.

SIR: I have made nearly a hundred tests of the tensile strength of electrically-welded bars of iron, steel, and other metals. The results were of such a character that I can state positively that with Thomson's welding process it is possible to weld both wrought iron and steel so that the weld is as strong as the same cross-section in another part of the bar; that the appearance of the fracture is fibrous for iron, and generally granular for steel, the strength of this granular steel being on some samples as high as 125,000 pounds per square inch; that the process is such that the welding is homogeneous from necessity. I had a number of bars welded by an expert blacksmith, and a number of similar ones by the electrical process, for comparison, with the result that the electrically-welded bars were much stronger than those welded by the ordinary process. The bars were of various sizes, up to an inch and a half for iron and three-fourths of an inch, octagon, steel.

A. M. DOLBEAR.

There is, perhaps, but one direct use to which this process is applicable for electrical work, that is for the making of joints in conductors. One of the weak points in electrical construction is the joint. Joints in the copper wire are twisted, and sometimes soldered, the work being very often poorly done, and, as Mr. Woodbury will tell you, connections of that character are liable to cause fire and give a bad reputation to the electrical business; and I might say right here, that although electricity is considered a mystery, we really understand its laws, and what it will do, and how it will do it, although we know not exactly what it is; consequently if everything is done well, if lines are properly constructed and the wires are properly insulated, there will be very

little of this trouble that you hear about, which comes from the cheap construction and the poor methods that are generally in use when an industry of the kind is first being developed.

Mr. Oberlin Smith.—I think that to any one who knew anything about ordinary blacksmithing (which, probably, that critic who spoke about burning up steel might not have done), there would have been no fear of steel being burned by this process any more than in a blacksmith's fire, and not as much. There is nothing mysterious about the action of the electricity on the metal. It simply heats it. That heat is under perfect control. There are no impurities coming up out of the fire—sulphur, smoke and other stuff—to damage the steel; no danger of the fire getting ahead of you; no danger of heating the bottom of the bar while the top remains cool. Of course, we have to heat steel up to a certain definite degree to weld it at all—that is, barely up to its melting point at the surfaces to be united. Now as this process heats it more uniformly, neatly, under much better control, and with a great deal more cleanliness than any possible blacksmith's fire can do it, there cannot possibly be as much danger of burning steel by it as there is in that case. It can be protected by flux, and in other ways, if necessary. All that there is to do to it is to bring it up barely to the melting point, and press it together. It is therefore impossible that the objection in question should have any force.

Mr. Woodbury.—My reply to the interrogatory relative to the electric welding of a ring was very naturally a general answer to a general question. The resistance of the joint in the first place varies with each stage of the process, according to the form and the temperature, and as the mechanical contact of the softened metal becomes more perfect, and as the temperature becomes greater, and finally, as the cross section becomes larger, we bring in conditions which modify the electrical conductivity between the ends of the articles being welded.

It is natural that such questions should be asked in regard to welding a ring, because the process uses electricity of greater current than ever before produced, and the results are without precedent.

One of the old stories among the members of the Boston Bar is that in a litigation over the construction of certain wheels, Daniel Webster was counsel upon one side and Rufus Choate upon the other. Mr. Choate wrought himself into a fury to show that those

wheels could not be made in that way—that it was impossible to make them, and that the whole thing was a fabrication—and after he had very brilliantly stated his points, Mr. Webster motioned to an assistant to lift a cloth which covered certain matter, and merely said for his argument, "Your Honor, and Gentlemen of the Jury, there are the wheels;" and so, in answer to some of the criticisms, I can say, "There are the rings."

The question was asked relative to the enlargement of the joints at the portion of the weld. One difficulty with ordinary hand butt-welding has been the reduction of the cross section by the blacksmith. Here the cross section is somewhat enlarged, and that has not been considered a defect in chains; on the contrary, it has a tendency to prevent a chain from kinking. In some of the special forms of this welding apparatus, there are a pair of swedges that strike a blow on the metal as soon as the weld is effected, for the purpose of reducing both surfaces to a uniform size, as, for example, in the joining of certain classes of work, the operator, by placing his foot upon a treadle, strikes a blow upon the weld and reduces it to a uniform section.

Pieces can be welded with a burr so small as to be unnoticeable for most work; and by shaping the ends to a proper convexity, the weld can be left of size uniform with the remainder of the bar. There is an addition to the process of chain manufacture to which I have not alluded, because it has not yet been developed to a commercial basis, and that is the method of making an electric welded chain by machinery passing the rods into the machine where they are cut, bent, and joined, then welding the chain in a thorough manner, and passing it out at the other end of the device. There have been numerous other processes of manufacture where electric welding is to be used in connection with special or automatic machinery in methods which would never have been thought of in the application of ordinary process of welding where any use of heat in a machine would be entirely unfeasible.

It has been my purpose to limit the paper entirely to a consideration of what has been done without any speculations into the future tense of the possibilities of this new art of electric welding invented by Prof. Elihu Thomson.

CCCXVI.

ON THE DISTRIBUTION OF INTERNAL FRICTION OF ENGINES.

BY ROBERT H. THURSTON, ITHACA, NEW YORK.
(Member of the Society.)

INTRODUCTION.

IN earlier papers, read at various times before the American Society of Mechanical Engineers, the writer has called attention to the fact that the variation of load in steam-engines is not productive either of the method or of the amount of engine-friction that has been commonly assumed by earlier authorities on that subject.* It was shown that the formula of De Pambour, which makes the internal friction of the engine proportional to the load on its piston is not usually correct, and probably is never so, with any familiar form of engine, or under any conditions often met with in practice. It was further shown that, under the conditions of usual practice, and at all ordinary speeds and pressures of steam, the resistance of the engine itself, its internal friction, remains sensibly constant, and that the so-called friction card of the machine represents practically the friction of the engine when fully loaded, the indicated power without load being sensibly the measure of the wasted work of the engine when in operation under load of whatever amount.

The literature of this branch of the subject of steam engineering is very meager, and the results of experiment in this field, if any have yet been systematically made, are not recorded in any works as yet consulted by the writer. The very natural supposition that the friction of an engine is always composed of two parts, the one the friction of the engine unloaded, a constant, and the other a quantity measuring the added friction due to the imposition of the load, and variable directly with that added load, seems to have been accepted by all writers from De Pambour, the first

* Friction of Non-condensing Engines. Trans. Vol. VIII., No. CCXXVIII., and Vol. IX., No. CCLXV.

to attempt to consider the subject, to the period of investigation by the writer. On the other hand, however, engineers familiar with the operation of the engine have been accustomed to take a diagram with the steam-engine indicator, the engine being unloaded, as representative of the friction of the machine at all times. This was probably taken as so representative simply because it was usually impossible to obtain any measure of friction of loaded engine, and the friction card was thus the best approximation that could be secured. Rankine would seem to have suspected that the assumed formulas of De Pambour might not be exact, as he remarks, "Our knowledge of the amount of energy so lost is still very vague and indefinite;" but he also states (Steam-Engine, art. 292) that "in most cases which occur in practice, a result nearly agreeing with that of the preceding formula, is obtained by supposing that the whole of the prejudicial resistance is proportional to the useful load." De Pambour gives the value of the coefficient by which the load is multiplied as about 0.14, and Rankine asserts this to agree with practice. Weisbach attempts to produce a formula for this waste, assuming Morin's values of coefficients of friction, but his results are very greatly in excess of those to be given as determined by investigations made to ascertain its amount by experiment; they also seem to be based upon entirely inaccurate assumptions, and are evidently quite as unreliable as are those of De Pambour and Rankine.

The first investigation undertaken systematically to determine the law and the methods of waste by internal friction in the steam-engine were, so far as yet known, those directed by the writer, the scheme being the securing of constant conditions, except in the one direction in which variation was to be produced, for the purpose of noting the extent and the law of variation of friction with variation of the one element studied. Thus: The engine was placed under the usual and standard working conditions, but without load, and a friction diagram was taken as a measure of the power wasted in friction of engine alone. The conditions being kept constant in all other respects the load on the engine was varied from this minimum up to and beyond the maximum rated power of the machine, and the indicated compared with the dynamometric power in every case, the difference measuring the engine friction for that power and load. In other cases, the speed of the engine varied, the power and all other conditions being kept constant; the same method applied when the power,

speed, steam-pressure and other conditions were held constant, except that the method of distribution of steam was varied, and the results of such a series of tests were then compared with those otherwise obtained. In still other instances the steam-pressure was made the variable element, or the ratio of expansion and point of cut-off, the indicated and dynamometric power being in each case compared as before to obtain a measure of the engine friction. By this systematic method it was anticipated that in time a correct theory and exact formulas might be produced. This expectation has not been wholly disappointed; but the results of the investigation, while eminently satisfactory, have proved to be quite opposed to the original assumptions of the older writers, and in most perfect accord with those of the practitioners.

The first of these series of experiments to be made in so satisfactory a manner as to justify publication, were those conducted under the supervision of the writer, in the winter and spring of 1883–4, by Messrs. Aldrich and Mitchell, and published in a paper read before the American Society of Mechanical Engineers in the autumn of 1884.* The engine employed was a Straight Line Engine, constructed under the eye of its inventor, Professor John E. Sweet, past president of the society, and representing well that type of engine. These experiments showed unmistakably the error of the older formulas, and revealed the unexpected fact that, in that class of engines at least, the internal friction does not vary with the addition of load, but remains constant, so far as could be detected, at all loads. The method of lubrication and its efficiency, the variations of steam pressure and of speed, slight as they were, were accidental causes of change of engine friction, having very much greater effect on the total than a variation of the power of the engine from that marking its resistance to motion, unloaded, up to the full rated power of the machine, and even far beyond the latter amount. The engine had been carefully designed with the special intent to make engine friction as low as possible, and the loss by friction at its rated power was but about six per cent. It came down to about five per cent. at the maximum power demanded of it, varying almost precisely in inverse proportion to the indicated power. The "friction card" was a measure of the friction of the engine at all loads.

This research was again undertaken at the request of the writer,

* Trans. A. S. M. E., Vol. VIII., page 86.

in the winter and spring of 1885, by Messrs. Day and Riley, of Sibley College, Cornell University, employing a similar engine, built under the supervision of the inventor in the workshops at that school. The outcome of these investigations, which have also been recently fully reported and widely published in this country and in Europe, was thoroughly corroboratory of the previous conclusions. No measurable variation of the total internal friction of the engine could be traced to the variation of engine power and load. Studying the effect of variation of steam pressure, it was found that some slight alteration was produced, the friction increasing very slowly as pressures were increased, but not in any important degree. These data have been since revised by Messrs. Carpenter and Preston, and it has been found that the change of friction with variation of steam pressure may be taken as insensible after passing the ordinary minimum working pressure of engines, the variation being observable only from about 50 or 60 pounds per square inch downward. It having been also suggested that the method of steam distribution might produce some change in the law exhibited by the types of engine having automatic adjustment of expansion by the action of the governor, Messrs. Gillis and Buchanan, in 1887, undertook, under the direction of the writer, to settle this question by experiments upon the engines of similar type, as employed in the mechanical laboratories of the Sibley College. These experiments fully confirmed those which had previously been made, and showed sensibly constant friction at all powers and loads, whether the engine was regulated by the automatic system, or by a governor operating the throttle valve in the steam pipe or at the steam chest.

We are now brought to the study of the latest, and as yet unpublished, experiments made to determine, with some degree of exactitude, the *method of distribution of internal friction*, and, further, to ascertain whether all engines are subject to the same law as has been found to control the high speed engines previously employed in these researches. These last investigations were made with this object in view by Prof. R. C. Carpenter, of Lansing, Mich., and Mr. G. B. Preston, of Sibley College, as observers, experimenting first with the engines of the college laboratories, and later with other machines of various types in and near Lansing. Earlier experiments had shown the engine friction to be independent of the load, but to be a function of the characteristics of the engine itself, of the speed of piston and rotation, of the steam

pressure, and of the method of steam-distribution, the two last-named conditions having slight effect, the others being most important. The weight and design, and the character of the workmanship of the engine, primarily determine the amount of its internal friction; the resistance is also a direct function of its speed, and it is slightly and observably affected, within limits, by the steam-pressure variations, and by the character of valve-gear and of steam distribution and of regulation of engine. The speed and weight of the running parts of the engine may, so far as can now be ascertained, be taken as the elements controlling friction of the machine. The details of all this earlier work have been given at sufficient length in the earlier volumes of the Transactions of the American Society of Mechanical Engineers.

It now becomes an interesting and a vitally important problem to determine just how this friction of engine is distributed among its various moving parts, its journals and guides, stuffing-boxes and piston-rings. This has hitherto been regarded as a problem incapable of solution, since it was presumed that the total and the elements of the internal friction of engine would be so seriously variable with the alteration of load, that it would be impossible to measure the friction of the machine part by part, and to sum up the whole correctly. It having been found, however, that the internal friction of the engine is invariable in any measurable or important degree with variation of power, and that the so-called "friction-card" is a measure of the friction of the engine at all powers, the speed being constant, it is at once evident that we may now proceed to analyze the several parts of this total by analyzing the engine into its various friction-producing elements, and measuring up the several elements of the total friction, each by itself, and summing all for the total. The discovery of the sensible constancy of the total friction thus affords a new means and method of investigation. This accomplished, also, it becomes possible, knowing as we now do, the quantities of friction at each point of "pairing" of elements, as Reuleaux would say, and it becomes easy, to determine just where the most serious wastes of energy and power are met, and thence, just in what direction we are to study the design and construction of the machine with a view to the reduction of these wastes most promptly and effectively. The improvement of the efficiency of the steam-engine is to be now effected very largely by its improvement as a piece of mechanism, and nearing, as we now are, the limit of the perfecti-

bility of the engine thermodynamically, the engineer is compelled to look in this direction for further opportunity of advancement. The thermodynamic efficiency of the engine has attained, in the best of modern engines, very nearly its maximum under familiar working conditions; the efficiency of the engine as a machine still offers some little chance of gaining upon the existing conditions of best work. The thermodynamic wastes are now by the best designers and constructors reduced to about ten per cent. in large engines, while the friction-wastes of the machine are usually considerably more in that class of engines, though less in the simpler and lighter engines of the recent high-speed type.

The plan adopted in the series of experiments to be described, in which Messrs. Carpenter and Preston proposed to endeavor to effect an analysis of the total internal friction of the steam-engine, and to ascertain in what proportion it is distributed to piston and crosshead, crank-pin and shaft, valve-gear and guides, was to first determine the friction of the machine in the manner already practiced by them and by their predecessors in this work, then to dismantle the engine, part by part, driving the connected parts by a pulley and belt from the main line of shafting overhead, through a transmitting dynamometer carefully standardized, and thus to secure measurements of the resistance of part after part until all the rubbing parts having been thus examined, the sum of their resistances at the normal speed of the engine should give the total internal friction of the engine and the percentages of the whole due to the resistances of each point of connection or rubbing. In each experiment the endeavor was made to secure precisely the conditions of operation, so far as was practicable, which were usual in its regular working. For instance: the engine was always heated up by its own steam when the resistances of the piston and the valves were to be measured; the speed of engine was kept the same when testing the friction of journals as when it was doing its full work; the valve, balanced and unbalanced, was tested under the usual boiler pressures, as well as unloaded, and exactly as possible, and thus every precaution that could be devised was adopted to secure precisely the results that should be observed, were such observation possible, when the machine was at work. The engine was first driven by the shafting, and through the dynamometer, with everything connected and the cylinder heated up to its usual temperature by a run, immediately preceding, under steam, the cylinder heads and

steam chest cover only being removed to prevent any pump-like action of the engine while so driven. Next, the piston was disconnected, and the power demanded to give the engine its regular speed was observed with all other parts connected and moving; thus obtaining a measure of the friction of the piston alone, by differences. Then the next point of connection would be broken, and another observation would give the friction of the next successive piece, and so on until the whole engine had been gone over, when the machine was assembled again, part by part, and thus a check obtained on the previous determinations.

The first step of importance was to secure a good standardization of the transmitting dynamometer to be employed in the work. This method required the use of a transmitting dynamometer of great accuracy. Sibley College possesses a number of such dynamometers, the accuracy of each of which was tested by comparison with a Prony brake, and also by lifting a known weight through a given space. The best result was given in each case by a dynamometer of the Morin type, built in the Sibley College shops. The principle governing its action is very simple, and is shown clearly by Fig. 18.

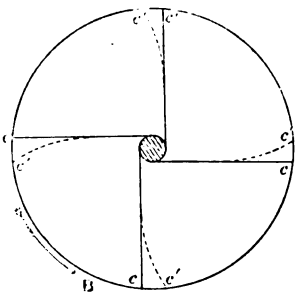

Fig. 18.

A pulley of which the rim B is shown, is fitted loose on the shaft S. Four flat springs are securely bolted to the shaft S, and to the rim B. Now, if force be applied by a belt around B, to turn the pulley, and if resistance to its turning be produced by a fixed pulley on the shaft S, from which some machine is driven by the belting, the springs c will be deflected into new positions, c', an amount proportional to the force, and the fixed pulley will then revolve, thus driving the machine. To show the amount of power transmitted, and any variation that may occur in that power, a pencil is attached to the rim of the pulley, or to a post having an equivalent motion, and a recording apparatus, consisting of a series of gear-wheels actuated by a spiral thread on a sleeve on the axis, causes a band of paper to move radially under the pencil. The recording apparatus can be stopped or started at will, without interfering with the motion of the machinery, by causing the loose sleeve to engage with a lug on the shaft. The results obtained with this dynamometer agreed closely with those results obtained by the Prony brake, and by moving a known

weight through a given space. The diagrams obtained from the dynamometer consisted of a series of waving lines of varying elevation and with different average ordinates. The undulations were produced by changes of speeds probably caused by the inequalities of belt lacings, etc.

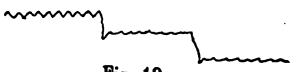

Fig. 19.

The general appearance of these diagrams is shown in Fig. 19.

The dynamometer was calibrated three times: first, by attaching a brake to the same shaft, and comparing the diagrams with the brake readings; secondly, by direct pull with a spring balance against the springs of the dynamometer and thus obtaining the ordinate for a given belt-pull; thirdly, on the same principle as the first, but a spring balance was used, to measure the brake weights, instead of scales. The object of these calibrations was to obtain the ordinate corresponding to any given belt-pull. The following results were obtained:

CALIBRATION OF DYNAMOMETER.

Comparison with Prony Brake.

1st Trial—Brake pulling against load of 52 pounds on Fairbanks Scale.

Scale Load.	Brake Load Pounds.	Pull on Dynam. Pulley.	Ordinate in Inches.
2	50	67.1	3.10
6	46	61.7	3.00
11	41	55.0	2.90
16	36	48.3	Lost.
21	31	41.6	2.06
26	26	34.9	1.75
27	25	33.5	Lost.
31	21	28.2	1.57
36	16	21.5	1.30
41	11	14.8	1.25
52	0	0	0.4
2d Trial—Brake pull measured by a spring balance.			
	5	6.7	0.54
	10	13.4	0.92
	15	20.1	1.23
	20	26.9	1 55
	25	33.6	1.80
	30	40.3	2.16

The diameter of the brake pulley, including belt, was 23½ inches; the dynamometer pulley, including belts, was 17½ inches.

CALIBRATION OF DYNAMOMETER.

2d. Method, by direct pull against springs of dynamometer.

This method was employed a number of times, and gave uniform results, the variations from the results of this trial and the first and third, as previously given, are believed to be errors incident to the use of the brake.

Pull on Dynam. Pulley Pounds.	Ordinate Inches.	Pull on Dynam. Pulley Pounds.	Ordinate Inches.
0	0.40	35	1.80
5	0.65	40	2.08
10	0.80	45	2.32
15	1.02	50	2.58
25	1.33	60	3.08
30	1.55	70	3.52

The mean of these three results corresponds very closely to this last, and, where plotted, gives a straight line, whose equation is

$Y = 0.046 + 0.20$, Y being expressed in inches and X in pounds.

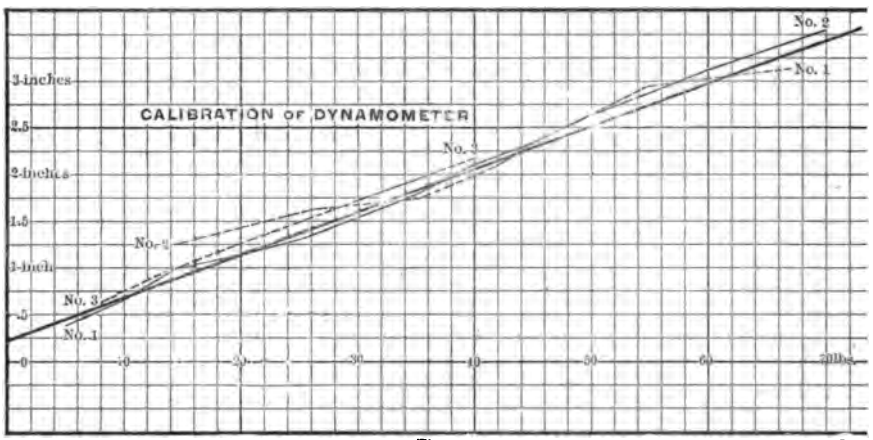

Fig. 20

The diagram of the curves is shown, and in interpreting the results was used instead of the equation. (See Figure 20.)

The engines employed in the investigation to be described were of several types and of various sizes, styles and proportions. The first was a small Straight Line Engine built in the Sibley College workshops, but modified from time to time for purposes of experiment, in such manner that it represented the ordinary type of

directly connected engine with throttle regulation. It was tried both with its usual balanced and with an unbalanced valve. Another engine was a traction-engine built by the Lansing Iron Works with locomotive style of valve motion; and others, by the same company, were of the automatic type, and compound and condensing engines, both the latter having balanced valves.

Friction of Straight Line Engine.

The first engine tested was the 6 × 12 inch Straight Line Engine built by Prof. J. E. Sweet, while connected with Sibley College. This engine had been modified for experimental purposes in many ways, but still retained the principal characteristics of the Straight Line Engine. The valve gear is arranged for a fixed cut-off, at any part of the stroke less than five-eighths, and the valve can be changed, by removing the pressure plate and fastening on a back, from a balanced valve to an ordinary slide valve.

For these tests, the power was obtained from the water-wheel and main driving shaft, in the Sibley College shops, the speed of which was not always uniform and was beyond the control of the investigators. The power was measured by passing it through the transmitting dynamometer. The speed was measured by a hand speed indicator, and also by an attached tachometer, which had been carefully calibrated. The tachometer results could only be used to correct errors, as readings to single revolutions could not be made.

In making this trial, and all others, the engine was first heated up by steam, the steam-chest cover and cylinder heads were removed to prevent pump action, then, as quickly as possible, the dynamometer cards were taken. These diagrams were generally taken with the engine complete, and then successive cards with part after part removed. The engine was turned by power applied to its main driving-wheel. The speed of the engine varied from 200 to 244 revolutions, and the results were corrected in accordance with the law, known to be true for that engine, that the friction varied directly as the speed. This correction, however, did not seriously change the results. Twenty-nine successful dynamometer cards were obtained, each of which may be considered as the average of several observations. The practical condition of working of a plain slide valve, with steam on, could not be obtained in

these trials, because the cylinder was open to the air, and the friction obtained is no doubt too high for that particular case.

Table I. presents a record of the distribution of friction found in this engine and all essential data from later comparisons with other results from tests of the various engines afterward employed.

Table II. exhibits the method of variation of friction, and Tables III. and IV. its computed amounts.

TABLE I.

DISTRIBUTION OF FRICTION.

Straight Line Engine 6″ × 12″

Log of trial with Morin Dynamometer.

Number.	Ordinate.	Pull in lbs.	Revolutions per Minute.	H. P. Developed.	H. P ÷ Revolutions.	H. P. Corrected for 230 Revolutions.	Steam Pressure in Engine.	Condition of Engine.
1	1.78	34.5	208	1.556	.007	1.710	0	Engine Complete. Warmed up by Steam. Cylinder head off. Steam-chest cover and pressure-plate off. All cocks open.
2	1.87	36.5	205	1.622	.008	1.822	0	
3	1.86	36.5	205	1.622	.008	1.822	0	
4	1.20	22.5	230	1.122	.005	1.122	0	Piston and piston-rod dropped.
5	1.25	23.25	232	1.169	.005	1.159	0	
6	1.27	23.8	244	1.259	.005	1.189	0	Pressure-plate and steam-chest cover replaced.
7	1.28	24.0	245	1.275	.005	1.200	40	
23	2.04	39.0	186	1.573	.008	1.925	45	Balanced valve converted into slide valve. Steam pressure on back of valve.
24	1.90	37.0	186	1.492	.008	1.844	45	
25	1.82	35.0	201	1.525	.007	1.728	42	
26	1.81	35.0	214	1.624	.008	1.752	39	
27	1.92	37.5	201	1.634	.008	1.868	37	
28	1.67	34.0	217	1.599	.007	1.690	74	

Number.	Ordinate.	Pull in lbs.	Revolutions per min.	H. P. developed.	H. P. revolutions.	H. P. corrected for 230 revolutions.	Steam pres're in engine.	Condition of engine.
30	1.1	22.5	229	1.117	.005	1.112	0	Slide valve, piston and rod still off.
31	1.8	34.75	218	1.642	.0075	1.732	74	
32	1.07	19.5	205	0.867	.004	0.967	0	Main shaft and eccentric.
33	1.03	18.5	207	0.830	.004	0.922	0	
34	1.00	17.5	228	0.865	.004	0.873	0	Eccentric strap made as loose as possible.
35	0.95	16.5	225	0.805	.004	0.825	0	
36	1.10	19.5	227	0.960	.004	0.972	0	Connecting rod attached to crank pin.
39	1.26	23.0	215	1.072	.005	1.147	0	Engine complete except piston and rod. Slide valve attached. Cylinder hot.
40	1.84	35.0	198	1.502	.008	1.758	75	
41	1.29	24.0	222	1.155	.005	1.195	0	
42	1.92	37.5	211	1.715	.008	1.867	67	
45	1.24	23.0	223	1.112	.005	1.147	0	Slide valve dropped. Valve rod still attached.
47	1.39	26.0	222	1.251	.006	1.299	0	Balanced valve. Pressure plate and cover off.
48	1.28	23.5	220	1.121	.005	1.171	0	
43	1.29	24.0	224	1.165	.005	1.195	0	Pressure plate and cover added.
44	1.22	22.5	228	1.112	.005	1.222	58	

TABLE II.

SUMMARY OF THE LOG.

Distribution of Friction.

6″ × 12″ Straight Line Engine.

Symbol.	Number.	Friction H. P.	Average F. H. P.	Parts of the engine producing friction.
A	34 35	0.873 0.825	0.849	Main journals.
B	32 33	0.922 0.966	0.944	Eccentric strap and main journals.
C	36	0.972	0.972	Crank pin and main journals.
D	30 41 43 45	1.122 1.195 1.195 1.149	1.165	Cross-head and pin, crank-pin, eccentric and main journals.
E	40 42 23 24 25 26 27 28 31	1.758 1.867 1.925 1.844 1.728 1.752 1.868 1.690 1.732	1.796	Plain slide valve, cross-head and pin, crank-pin, eccentric and main journals, with steam on.
F	43 6	1.195 1.189	1.192	Condition D, with balanced valve and pressure plate added.
G	7 44	1.200 1.222	1.211	Condition F with steam pressure.
H	1 2 3	1.710 1.822 1.822	1.785	Engine complete with balanced valve. No steam pressure but engine hot.
I	4 5	1.122 1.159	1.140	Condition D with balance valve added but pressure plate off.

TABLE III.

COMPUTATION.

Distribution of Friction.

6″ × 12″ Straight Line Engine.

Combination of Conditions.		Results H. P.	Individual part to which friction is due.
Algebraic work.	Arithmetical work.		
A	.849	0.849	Main journals.
B — A	.944 — .849	0.095	Eccentric strap.
C — A	.972 — .849	0.123	Crank pin.
D — C[B — A]	1.165 — .972 — .095	0.098	Cross-head and pin.
E — D	1.796 — 1.095	0.631	Slide valve, steam on.
G — D	1.211 — 1.165	0.046	Balanced valve, steam on.
H — F	1.785 — 1.192	0.593	Piston and rod.

Symbols of condition in column of algebraic work explained in previous table. Diameter of main journals, three inches; weight in main journals, 1,500 pounds.

TABLE IV.

PERCENTAGE OF TOTAL FRICTION AND OF RATED POWER.

6″ × 12″ Straight Line Engine, 20 H. P.

Parts of Engine.	Engine with Slide Valve.			Engine with Balanced Valve.		
	Friction H. P.	Per cent. of Total Friction.	Per cent. of Rated Power.	Friction H. P.	Per cent. of Total Friction.	Per cent. of Rated Power.
Main Journals	0.849	35.4	4.2	.849	47.1	4.2
Eccentric Strap	0.095	4.0	0.5	.095	5.3	0.5
Crank Pin	0.123	5.1	0.6	.123	6.8	0.6
Cross Head and Wrist Pin	0.098	4.1	0.5	.098	5.4	0.5
Valve (Steam on)	0.631	26.4	3.2	.046	2.5	0.2
Piston and Rod	0.593	25.0	3.0	.593	32.9	3.0
Total	2.389	100.0	12.0	1.804	100.0	9.0

Lansing Engine Trials.

Distribution of Friction; 12″ × 18″ Automatic Engine.—The remaining tests to be described were made at Lansing, Michigan, and on the engines built by the Lansing Iron and Engine Works of that place.

The first engine tested was a new 12″ × 18″ Automatic Engine. A series of trials to determine change of friction with change of

load was first made, which gave us the average friction, 8.91 H. P., whether loaded or light. Considerable difficulty was experienced in attaching the dynamometer, and it is found impossible to obtain the friction on each distinct part of the engine. For this trial the springs of the dynamometer were flexed in the opposite direction from that adopted when it was calibrated; the results were taken as proportional, and the total made to agree with the previous trial. The highest speed attained was 68 to 70 revolutions; the normal engine speed was in the previous trial 190 revolutions. The friction horse power in the last column was obtained by multiplying by the proper ratio. In any event the percentage would not change.

Table V. exhibits the distribution of resistances obtained in this case.

TABLE V.

DISTRIBUTION OF FRICTION LOG OF DYNAMOMETER TRIAL. LANSING IRON WORKS, 12″ × 18″ AUTOMATIC.

Rated 100 H. P.

Condition of Engine.	Symbol.	Mean Ordinate.	Reading from Calibration. Pounds.	Tension on Engine Belt. Pounds.	Speed of Engine in Rev's per Min.	H. P.	H. P. for 190 Rev's per Min.
Engine in working condition and hot	A	11.3	45.	76.5	68	2.96	8.88
Piston, cross-head and connecting rod dropped	B	6.7	25.	42.5	68	1.51	4.53
Valve and eccentric also dropped.	C	5.6	19.75	33.5	73	1.40	3.70

COMBINATION OF RESULTS.

Parts of Engine.	Algebraic work.	Arithmetical work.	Frictional H. P.	Per cent. of total Friction.	Per cent. of power of Engine.
Main Journals	C	3.70	3.70	41.6	3.7
Valve and valve gear, including eccentric	B – C	4.53–3.70	.83	9.3	0.83
Piston, cross head, crank and wrist pins	A – B	8.88–4.53	4.35	49.1	4.35
Total			8.88	100.0	8.88

The letters used under head of algebraic work stand for conditions shown in the other table.

Distribution of Friction, 7″ × 10″ *Engine.—Locomotive Valve*

Gear.—The test was conducted in the same manner as the original Sibley College test, except that the power was supplied by a similar engine, and the dynamometer was located between the two. The engine was a traction engine used in thrashing grain; it had a common slide valve link and two eccentrics. It had been previously tested to find variation of friction with change of load. During the test the engine was taken to pieces in a thorough manner, as originally planned, and the results are in each case satisfactory. In the attempt to run with the connecting rod disconnected from the cross-head, a machinist held the free end of the rod. A speed of 206 revolutions, however, caused him to exert some force, so that this result is unreliable, as the test shows the same friction as with the main journals alone. The friction on the main journals was measured with the usual fly-wheel which weighed 320, and with one that weighed 70 pounds to note variation in journal friction.

Table VI. shows the method of variation of friction-resistances in this case, as the engine was gradually dismantled; and Table VII. exhibits its distribution among the several elements of the machine.

TABLE VI.

DISTRIBUTION OF FRICTION.

Traction Engine—Locomotive Type.

7 × 10. Lansing Iron Works.

Condition of Engine.	Symbol of Condition.	Revolutions of Engine.	Mean Ordinate.	Tension on Dynamometer Belt in Pounds.	Friction H. P. at Given Speed.	Friction H. P. 200 Revolutions.
Complete, hot, cocks open	A	196	5.35	19.50	1.47	1.50
" " back head off	B	202	5.68	20.25	1.58	1.56
Piston and rod out	C	202	4.36	14.75	1.14	1.13
Rod in, spider on, but piston rings out.	D	200	5.14	18.00	1.40	1.40
Condition C with 40 pounds steam on valve	E	198	5.4	19.50	1.49	1.51
Valve and valve rod off	F	190	4.3	14.25	1.05	1.10
Remainder of valve gear off	G	203	3.6	12.00	0.94	0.93
Condition G with governor off	H	203	3.65	12.25	0.96	0.94
Cross head and pin off (connecting-rod held by attendant)	I	206	3.1	9.00	0.71	0.69
Main journals, standard fly wheel, weight 320 pounds	J	200	3.0	8.75	0.67	0.67
		190	3.1	9.00	0.66	0.69
Main journals, small fly-wheel, weight 70 pounds	K	262	2.3	5.75	0.57	0.44

TABLE VII.

DISTRIBUTION OF FRICTION.

7 × 10 *Engine.*

Combination of Results.—Rated 20 H. P.

Parts of Engine Causing Friction.	Combination.		Fractional Horse Power.	Per cent. of Total Friction.	Per cent. of Rated Power of Engine.
	Algebraic Work.	Arithmetical Result.			
Main journals	J	0.68	0.680	35.2	3.4
Crank-pin, wrist-pin, and cross-head	$\frac{H+G}{2} - J$	$\frac{.94 + .93}{2} - .68$	0.255	13.1	1.3
Eccentrics and links	$F - \frac{G+H}{2}$	0.165	0.165	8.2	0.82
Slide valve and rod, no steam pressure	C − F	1.13 − 1.10	0.030	1.5	0.01
Effect of 40 pounds of steam	E − C	1.51 − 1.13	0.380	19.5	0.19
Piston and piston-rod	D − C	1.40 − 1.13	0.270	16.0	0.135
Piston-rings	$\frac{A+B}{2} - D$	0.130	0.130	6.5	0.065
Total			1.910	100.0	9.52

NOTE.—In the column headed Algebraic Work, the letters refer to conditions as denoted in preceding table.

DISTRIBUTION OF FRICTION.

Engine, Condenser, and Air Pump. Diameter 21 inches, stroke 20 inches. This engine, 21″ × 20″ in connection with an engine 12″ × 10″, made a compound condensing engine which drove the Thomson-Houston Dynamos, used for the electric lighting of the city of Lansing. A complete test for friction, with change of load had previously been made of these engines, separately and combined. This engine being larger than could be driven by power transmitted through the dynamometer, the plan was adopted of utilizing the connecting shaft between the high and low pressure engine, and of measuring the power necessary by indicator cards on the high-pressure engine. Metallic paper, and a fine brass point was used instead of the usual paper and pencil employed in taking indicator cards. Two dynamos were allowed to run light during the whole of this test, being driven by the high pressure engine; this friction being eliminated in the final result.

The method adopted was to take indicator cards of the high-

pressure engine, and the load to be carried throughout the test; then to add successively the main journals in the engine to be tested, the condenser and air pump, the connecting rod and cross-heads, the valve and valve-rod, and finally the piston and piston-rod.

The plan was in great part successful, but could not be entirely carried out.*

Table VIII. shows the distribution of the friction in this series of trials.

TABLE VIII.

DISTRIBUTION OF FRICTION.

Condensing Engine.

21 × 20 inches built by Lansing Iron and Engine Works.

Condition of Engine.	Symbol of Condition.	No. of Card.	Revolution per Minute.	HEAD INDICATOR.		CRANK INDICATOR.		Total Friction. H. P.	Average Friction. H. P.
				M. E. P.	F. H. P.	M. E. P.	F. H. P.		
High-Pressure Engine and fixed load.	A	1	207	4.5	14.36	5.0	15.52	29.88	28.9
	A	2	207	4.5	14.36	4.0	12.42	26.78	
	A	3	207	4.75	15.16	4.75	14.74	29.90	
Main bearings of 20×24 engine coupled on.	B	4	205	4.5	14.23	6.25	19.21	33.44	35.2
	B	5	205	4.5	14.23	5.75	17.67	31.99	
	B	6	205	4.75	15.02	5.75	16.13	31.15	
Valve and Valve Rods connected to eccentrics.	C	7	204	4.75	18.56	7.5	28.50	47.06	42.5
	C	8	202	5.0	19.35	5.5	19.70	39.50	
	C	9	200	5.0	19.16	6.	22.36	41.52	
Air Pump and Condenser added.	D	10	198	5.0	19.27	8.5	31.35	50.62	48.6
	D	11	200	5.3	20.51	7.3	27.47	47.98	
	D	12	192	6.0	22.07	7.	25.04	47.11	
Connecting rod with Cross head and Piston added. Air Pump Gauge with Pressure as shown subsequently.	E	13	200	13.5	52.73	14.15	54.96	107.69	113.88
	E	14	172	17.5	57.68	18.5	59.28	116.96	
	E	15	172	18.	57.68	18.	59.32	117.00	
Average work shown by Vacuum Gauge.	F	....	....	.....	.....	.....	.....	.....	63.80

There were several conditions during this test that were not uniform throughout; nor were they normal. For instance, in cases *C*, *D* and *E* cards 7 to 15, the valve or piston of the engine or both was in motion, and it was impossible to lubricate the valve, although the piston was lubricated without difficulty. The results in both cases, *C* and *D*, can be considered as relative only, not

* A serious accident was barely escaped after the air pump had been attached and while the connecting rod was detached from the crank pin. The vacuum caused by the working of the air pump, drew the connecting rod toward the rapidly revolving crank; the meeting of the two was heralded by a sudden and violent pounding. The rapidity of the motion prevented any serious damage, until the connecting rod could be safely put out of the way.

absolute. Again, in case *E*, it was found impossible to prevent the action of the air pump on the piston; the work done was however shown by the vacuum gauge, and was equivalent, respectively, to a pressure of 9.82, 10.3 and 10.3 pounds, in cards 13, 14 and 15, or a work equivalent to 69.26, 61.12 and 61.12, with an average of 63.8 horse-power, over and above that due to moving the engine. The average of a large number of previous trials gave 7.13 H. P. as the total friction of this engine together with air pump and condenser; and this fact must be noted in considering cases *C* and *D*.

Combining these various observations, we get the following results:—Friction on main journals equals

$$B - A = 3.3 \text{ H. P.}$$

Engine complete, air pump at work, case *E*, gives 113.88 H. P.; without piston, air pump and unlubricated valves as before, gives us case *D*, 48.60 H. P. The difference, 65.28 H. P., includes work of air pump and friction of piston and rod. The work of air pump is 63.8 H. P., leaving for friction of piston and rod 1.48 H. P.

The difference between the total friction, and that on the parts, already found, is the sum of the friction for cases *C* and *D*, which must be divided in the proportion indicated by the observations. Table IX. is a summary of the deductions from this set of trials of a condensing engine.

TABLE IX.

DISTRIBUTION OF FRICTION.

Condensing Engine, 21 × 20 *inches*.

Summary of Results.

Parts of Engine Considered.	Conditions Combined Algebraically.	Friction—Horse Power.	Per cent. of total friction.
Main journals	B − A	3.3	46.
Piston and rod, crosshead and pins	E − (D + F)	1.48	21.
Valve rod and eccentric	Determined as explained	1.47	21.
Air pump and condenser	" " "	0.88	12.
Total		7.13	100.

CO-EFFICIENT OF FRICTION.—The co-efficient of friction can be deduced with certainty only for the main journals of the engine; since there is a variation in pressure of piston rings, stuffing boxes, and in angularity of the connecting rod, which is, at least to a great extent, unknown.

If we call f the co-efficient of friction, p the pressure on the bearings in pounds for engines light, and plus mean pressure on piston for engines loaded, c the circumference of the bearings in feet, n the number of revolutions per minute, $f\ p\ c\ n$ will thus equal the "lost work" of friction; which has been determined in the previous experiments, and is expressed as horse-power; this is transformed to foot pounds by multiplying by 33,000.

Hence $f\ c\ p\ n = 33{,}000$ H. P.

$$f = \frac{33{,}000 \text{ H. P.}}{p.\ c.\ n.}$$

Table X. shows the value of this co-efficient for the several engines tested, and Table XI. is a summary of *all* results.

TABLE X.

CO-EFFICIENT OF FRICTION FOR THE MAIN BEARINGS OF STEAM ENGINES.

ENGINE.	F. H. P. due to Main Journals.	Weight on Journals in Pounds.	Diameter of Journal in Inches.	Co-efficient of Friction, Engine Light.	Co-efficient of Friction, Engine Loaded.	Revolutions of Journal per Minute.
6″ × 12″ Straight Line.....	0.85	1500	3	.10	.06	230
*12″ × 18″ Automatic (L. I. W.).....	3.70	2600	5	.19	.05	190
7″ × 10″ Traction (L. I. W.).....	0.68	500	2¾	.31	.08	200
21″ × 20″ Condensing (L. I. W.). ...	3.30	4000	5½	.09	.04	206

* The 12″ × 18″ automatic engine was new, and gave, throughout, an excessive amount of friction as compared with the older engines of the same class and make.

TABLE XI.

DISTRIBUTION OF FRICTION.

Summary of Results.

Parts of Engine.	Percentages of Total Friction.				
	Straight Line 6 × 12 Balanced Valve.	Straight Line 6 × 12 Unbalanced Valve.	7″ × 10″ Lansing Iron Works—Traction-Locomotive Valve Gear.	12″ × 18″ Lansing Iron Works — Automatic Balanced Valve.	21″ × 30″ Lansing Iron Works – Condensing Balanced Valve.
Main Bearings	47.1	35.4	35.0	41.6	46.0
Piston and Rod	32.9	25.0	21.0	49.1	21.0
Crank Pin	6.8	5.1	13.0		
Cross Head and Wrist Pin	5.4	4.1			
Valve and Rod	2.5	26.4	22.0	9.3	21.0
Eccentric Strap	5.3	4.0			
Link and Eccentric			9.0		
Air Pump					12.0
Total	100.0	100.0	100.0	100.0	100.0

Conclusions and Deductions.

In each case the engine to be experimented with was first examined, by the process which has been so fully described in the preceding papers on this subject, to determine whether its friction under varying loads was actually constant, as in the engines previously tested. This was found to be practically the case in every instance, and even the compound engine, contrary to the expectation of the writer, exhibited substantially the same internal friction at all loads up to its full rated power, and with no load at all. The minimum friction was 13.5 H. P., the maximum, 17.5, varying irregularly, with the character of the lubrication, probably, and giving the higher or the lower figure indifferently whatever the work done, and however the power might be distributed between the two cylinders. As this engine was non-condensing, the problem still remains to be solved with respect to condensing engines, unless, indeed, the few experiments thus far reported may be taken, as is very probably the fact, as indicating the truth

of the general principle of constancy of internal friction for all engines, whether condensing or non-condensing.

These engines were also all tested to determine whether the previously reported increase of internal friction with speed were here to be accepted as correct. It was found that the several engines differed somewhat in this respect, but that the variation was in all cases slight, and in some instances insensible or even reversed, the friction decreasing in one case, observably, with increasing speed. It was sufficiently evident, for all the engines here considered, that this variation was so unimportant as to be negligible. The figures given in the several tables which have been presented in the preceding pages are therefore to be accepted as not only correct and reliable, but also as not likely to be affected by construction or method of operation of engine to such an extent as to be inapplicable to steam-engines generally. The writer, in the light of existing knowledge, would assume that it is the rule, with all the usual forms of engine, and under all common conditions of operation, that the internal friction of the machine is practically invariable with variation of useful work, and that it is very nearly independent of the speed of rotation and of piston, varying slightly, as a general rule, in the direction of increase with increase of speed. This latter principle leads to the conclusion that the friction co-efficient of the rubbing surfaces decreases with the load on the engine and with increase of pressure on them, a result confirmed by numberless experiments of the writer and others, independently. With good lubrication, the coefficient of friction rapidly decreases with intensifying pressures, and to such an extent as to make the actual resistance to movement very nearly constant. It is now possible to study the reported data intelligently, and to deduce useful and reliable conclusions relative to the effect of these new facts upon the theory and upon the principles of designing and constructing as well as operating steam machinery.

The last table presented, summarizing the work of the whole research, gives in most readable and intelligible form the data and the laws which it has revealed. The most important item of friction waste, in every instance, is that of lost energy at the main bearings. In every case it amounts to one-third or one-half of all the friction resistance of the engine, the higher figures being given by the condensing, the lower by the non-condensing engines, except that the first experiment, with the Straight Line Engine,

gives as high a figure as the condensing engines, a fact due, however, rather to the exceptionally low total than to exceptionally high friction on the main shaft. The second highest item is, in all cases apparently, the friction of piston and rod, the rubbing of rings and the friction of the rod packing. This is a very irregular item, as would have been naturally anticipated, and amounts to from a minimum of 20 per cent. to some higher but undetermined quantity. The third item, in order of importance, is the friction of valve, in the case of the engines having unbalanced valves. This is seen to be hardly a less serious amount than the frictions of shaft and of piston. But it is further seen at once that this is an item which may be reduced to a very small amount by good design, as is evidenced by the fact that, in the Straight Line Engine, it has been brought down from 26 to 2.5 per cent. by skillful balancing. Ninety per cent., therefore, of the friction of the unbalanced valve is avoidable or remediable. The importance of this fact is readily perceived when it is considered that not only is it a serious direction of lost work and wasted power and fuel, but that the ease of working of the valve is a matter of supreme importance to the effective operation of the governing mechanism in this class of engines. No automatic engine can govern satisfactorily when the valve is unbalanced, and is certain to throw much load on the governor. The frictions of crank-pin, of cross-head, and of eccentrics, are the minor items of this account; they are comparatively unimportant.

Studying these facts with a view to further improvement of the steam-engine, certain inferences are at once obvious. The improvement of the steam-engine has to-day reached a point beyond which, in its thermodynamic relations, but little advance can be anticipated. Under usual conditions of operation of our very best engines, they are so near the efficiency of the ideal engine, working under precisely similar conditions, that the range of possible gain left to us is too small to permit us to look in that direction for rapid or important changes in further increase of efficiency and economy. Where the ideal engine would consume 10 pounds of steam per horse-power per hour, we have actually reached as little as fourteen, if the latest and best reports of the best of modern engines may be accepted as substantially correct; and even this thirty per cent. margin is reduced by practical conditions restricting expansion. If it were to be asserted that we may hope to bring the consumption of steam in good engines of the best

type down to as low as twelve pounds per hour per horse-power, it is probable that the most experienced and best informed engineers would think it a somewhat rash statement; but, in the opinion of the writer, that is what the tendency and rate of recent improvements would seem to promise for the immediate future, assuming that no very great increase in pressures and temperatures of steam may be expected. Practically, also, it is now known that the highest duty is not the most desirable, nor, on the whole, the most advantageous condition of operation of the engine, and we are restricted to lower duties and reduced efficiencies whenever we consider financial relations. It is, nevertheless, the fact, that the conditions of improvement are those which also give higher ratios of expansion for the best point of cut-off and most advantageous ratios of expansion. The duty to seek further means of improvement and higher efficiency becomes all the more imperative when we study the practical conditions under which our engines must be employed. Having, however, as just remarked, so nearly reached the limit of possible gain on the thermodynamic side, it becomes advisable to seek the more carefully for opportunities of improvement in other directions. We have, in the work outlined in this paper, both the directions shown us and the specific method of procedure suggested.

The real, final efficiency of the steam-engine, or of any heat-engine, as has been somewhat fully shown in earlier papers by the writer,* and later by others, is composed of the resultant of several distinct efficiencies, as the thermodynamic efficiency, the efficiency of the engine as a heat preserver and user, the efficiency as a machine, and the efficiency of a whole considered from a commercial standpoint. Of these several efficiencies, we have in this investigation the means of studying the efficiency of the machine as a division of the whole within which to seek the best means of securing a gain of total efficiency. The real and final efficiency is certain to be increased if we can effect an improvement at this point, whatever the extraneous conditions of operation. Finding little chance of gain thermodynamically, it becomes our duty to ascertain what are the probabilities of securing progress elsewhere. It is at once seen that the difference here between the real and the ideal engine is greater than in the domain

*On the Several Efficiencies of the Steam Engine. Trans. Am. Soc. M. E., Vol. III., p. 245.

of thermodynamics, the best cases being in both instances taken. Those engines which are most nearly perfect thermodynamically, are undoubtedly often least perfect, or at least of the least perfect types, when the efficiency of the engine as a machine is studied. Few of them have less than a total of twenty per cent. friction; while they are sometimes probably nearer the ultimate limit of improvement, practically, as converters of heat into work. We are now, for the first time in the history of the theory of the steam-engine, in a position to say just where the losses of the machine are in detail, how we are to endeavor to reduce them, in what degree we may hope for such gain, and where it is to be found if effected at all.

The first and most remarkable fact to be noted is the extraordinary amount, absolutely and relatively, of the friction of the crank shaft. This amounts to nearly one-half of the whole waste, and to from five to ten per cent. of the whole power of the engine, in the cases here examined. It is remarkable not only for its amount, but also because of the fact that we had begun to believe that, under similar conditions of pressure, speed of rubbing, and of lubrication, it was perfectly practicable to bring down the co-efficient to less than one per cent and perhaps to as little as one-tenth of one per cent. Here, however, we find, on examination of Table X., that this co-efficient rises, in the unloaded engine, to about 0.30 as a maximum, and, as a minimum, to at least 0.09; while it only falls to 0.04 in the best case, with the increase of pressure on the bearings due to full load and power. This is the more astonishing when it is considered that, on the axle of the car-wheel, it has been found often that the friction is a fraction of one per cent. and often as low as one-tenth per cent. Here is evidently the first place in which to seek further improvement. If this item can be brought down as low as in car-axle journals, the efficiency of the engine as a machine will be increased by about five per cent. in the very best cases, and by ten per cent. in ordinary engines. How this is to be done can be best ascertained when it is found just what are the causes of this extraordinary and previously unsuspected loss. The only conditions apparent tending to exaggerate this waste are the continuous rotation in one direction and the unintermitted pressure of the journal in its bearing. It would appear probable that it is a case of commonly imperfect lubrication. Could the oil-bath system in method and in results be secured here, it would seem probable that the friction

might be enormously reduced. It would even in many cases, if not in all, pay well to have a thoroughly reliable system of lubrication by means of a forcing pump that should insure the support of the journal upon a cushion of lubricant, thus making its action analogous to that of the "*palier glissant*" of Giffard and the "water bearing" of Shaw and of others.

The second and most obvious conclusion is that the valve should be balanced and so connected as to cause the least possible waste by friction through its motion or that of its moving connections. There is evidently no probable line of improvement so certain to yield a large and profitable result as this. The balancing of the valve has been accomplished, and frequently, during many years past, and so successfully that there is no excuse for neglecting this point in even the cheapest classes of engines. No engine can be considered as belonging to the best class which is not either provided with a balanced valve or which has not a system of valve-gear as with some of the "drop cut-off" engines, in which the loss in this direction is rendered insignificant. Here lies an opportunity to raise the efficiency of mechanism of ordinary engines at least five per cent., and of the best of engines with unbalanced valves two or three per cent. It is evidently better, in many cases, to have a valve which is balanced, though slightly leaky at times, than to use an unbalanced valve, though absolutely tight at all times. The simple fact, here revealed, that nine-tenths of this friction may be avoided is very important.

The third item in order of importance is the friction of piston and its rod. This is as great as that just referred to, and is vastly more variable with the class of engine, and probably in the same engine with differences in handling, and especially in setting up packing and springs, where they exist. The writer has often known the power of an engine to be sensibly affected by the carelessness or inexperience of the attendant, who had screwed up his packing in the rod stuffing-box too tightly, and has, on more than one occasion, had a similar experience where the rings were set out too hard. The metallic packings and the unpacked pistons and rods now coming slowly into use will unquestionably do much to remedy this defect of the average engine. Meantime, with the older design, it is perfectly possible to keep piston and stuffing-box tight without wasting much power, or by slowing down the engine by conversion of heat into work at points where the operation is likely to produce serious harm as well as waste. Rings

are much oftener too tight than too loose, and a stuffing-box should only be set up when the engine is running, and then only with fresh packing and not more than is sufficient to check any visible leakage. New packing in a well-made box never needs much compression, and when it becomes necessary to screw it down hard, it is time to replace it by new. Any packing that compels severe compression when new should be promptly condemned.

The remaining items are of minor importance as bearing upon the efficiency of the machine, and they are all obviously easily taken care of by a good designer and a good engineer in charge. Here, if anywhere, it is the fact that freedom of lubrication is the essential consideration, and the more nearly most absolutely flooded the parts can be, and the more absolutely certain lubrication can be made, the better, and irrespective, also, to a great extent, of the cost of the lubricant. Any lubricant freely used can be filtered and cleansed in such manner and so effectively that its more or less free supply to the bearing is a matter of no consequence as a matter of first cost; while the cost of wasted power and fuel, and of repairs due to excessive friction and wear, will usually enormously exceed any apparent gain in that direction. This latter consideration has been very fully treated by the author elsewhere,* and is probably also too familiar to engineers of experience to make it advisable to extend the limits of this paper so as to include more of detail in this and other matters. The importance of the work of which this is the history is sufficient, however, probably, to justify the length to which the paper has already extended.

By reducing the several items of waste and loss above enumerated to their minimum amounts, in the various ways pointed out, and by other less obvious expedients, it is evident that the efficiency of the machine may be so far advanced, in the case of the ordinary engine, as to give us the power of applying from five to ten per cent. of the total indicated power of the engine to useful, instead of to wasteful purposes, and thus to effect a gain of no small amount by improving both sides of the account.

Messrs. Carpenter and Preston have done other work of value, to which it may be possible to give attention later, and Professor

---

* Friction and Lost Work in Machinery and Mill-Work. J. Wiley & Sons: N. Y., 1885.

Carpenter is independently pursuing the study of the internal friction of engines. It is hoped that we may, in time, secure a very large body of valuable data, and especially that we may, after a time, be able to indicate the laws of its distribution with some accuracy for all types and styles of engine in common use.

[NOTE.—*This paper was presented and received discussion jointly with the Author's other paper entitled "On Variable Load, Internal Friction and Engine Speed and Work," published as No. CCCXVII. of the Transactions at the Scranton Meeting of the Society, Vol. X., page* 138.]

CCCXVII.

ON VARIABLE LOAD, INTERNAL FRICTION, AND ENGINE SPEED AND WORK.

BY ROBERT H. THURSTON, ITHACA, NEW YORK.
(Member of the Society.)

In a recent paper on the "Internal Friction of Non-condensing Engines," the writer gave the result of a series of experiments made to determine by further research the character of the internal friction of engines without condensers, and the method of its variation with variation of the usual conditions of operation. It had been shown previously that, in some classes of engine at least, this friction is constant with all loads whatever, up to and beyond the rated power of the machine. It was, in the last paper,* incidentally stated that the experiments kindly directed by Professor R. C. Carpenter, in the laboratory of the Sibley College, of Cornell University, have indicated a slight increase of internal resistances with increase of engine speed. For the small engine then tried, this increase amounted to eight per cent. of the number of revolutions made by the engine per minute. It is thus found, for that case, that the percentage of power lost by friction was a constant fraction of a given total power of the engine at all speeds.

This investigation has been continued during the past college year, and further data obtained from a number of engines of various types and sizes, the results of which investigation are now for the first time herewith presented. A summary of the work on the first engine used, and already reported upon, is here again given for comparison with the later results of trials made with other engines.† It will be seen that the method of variation of this friction with change of speed is apparently very largely dependent upon the method of lubrication and its efficiency.

---

* Vol. IX., Transactions Am. Soc. M. E., No. CCLXV.

† Trans. Vol. VIII., No. 82.

A very similar variation in this respect is to be traced in almost all cases of experiment made to determine the friction of journals or other rubbing surfaces, a very large number of examples of which will be found recorded in the recent work of the writer, on "Friction and Lost Work in Machinery and Mill Work." *

One of the engines employed in this later investigation was built by the Lansing Iron Works, of Lansing, Michigan, an engine having a steam cylinder eight inches in diameter, and a stroke of piston of twelve inches. It was fitted with an "automatic gear," and was of the same class and very similar in many respects to the well-known Buckeye Engine, built at Salem, Ohio. The valve is balanced, and has an unusually quick and wide opening, giving steam in a very satisfactory manner. The alteration of speed was effected by changing the position of the balls of its governor. The brake worked well throughout the tests, and the counting, done by a hand counter, was thoroughly reliable.

The following table exhibits the results obtained, both from this engine, and from a 12 by 18 inch engine also employed in the same research. The smaller engine had been in use about a year; the larger was new and had not left the shop.

TABLE I.

FRICTION WITH CHANGE OF SPEED.

Lansing Iron Works. 8 × 12 *Automatic.*

Number of Revolutions.	Average Friction Horse Power.	No. of Trials.
200	2.91	1
220	2.63	6
235	2.44	1
260	2.39	1

* New York, J. Wiley & Sons, publishers, 1885.

Lansing Iron Works. 12 × 18 *Automatic.*

Number of Revolutions.	Average Friction Horse Power.	No. of Trials.
175	9.07	2
180	8.87	5
185	10.60	2
190	7.55	4
192	8.11	6
187	9.74	2

Another series of trials was made by the same observers, using a "Tandem Compound Engine," also built by the Lansing Iron Works, having cylinders 14 and 21 inches in diameter, and 20 inches stroke of piston. The two pistons were secured to one rod, and the cylinders were thus placed the one behind the other. Its usual speed was about 200 revolutions per minute, and it was non-condensing. The machine was new, and its friction therefore probably greater than it would have been later, by a considerable amount. The data obtained gave the following results:

TABLE II.

FRICTION WITH CHANGE OF SPEED.

Tandem Compound Engine. Cylinders 14 × 20 *and* 21 × 20.

Rev. of Engine.	Average F. H. P.	No. of Tests.
130	21.84	1
136	25.97	1
156	28.49	3
158	28.50	2
159	24.16	2
160	27.73	3
162	25.37	1
165	27.78	3
168	28.35	2
183	30.85	1

NOTE.—The above test shows an increase of friction nearly proportional to the increase of speed, the equation of the curve would be

$$y = .168\ x.$$

y = number of revolutions.
x = friction horse power.

The most extended range of speed was obtained with a small engine recently brought out by the Lansing Iron Works and called, from its inventor, the "Jarvis Engine." (Fig. 58.) It was one of the first of its class and a new engine. In this machine

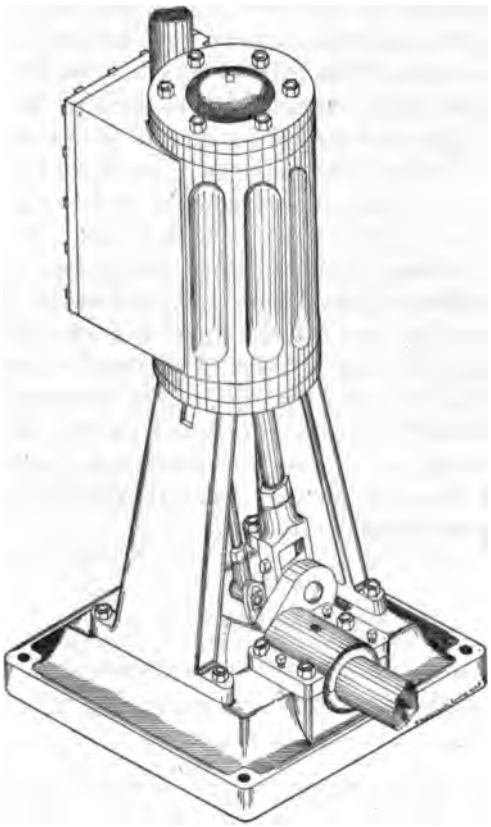

FIG. 58.

the piston is fitted with a globe joint by means of which it is attached to the rod, which latter thus vibrates as it drives the crank by a direct connection with its pin. To permit this vibration, instead of having a fixed trunk secured on the piston as is usual, forming a "half trunk" engine, the front head is designed with a globe joint also, in which works a coned sleeve, within which the rod slides, and the whole swings backward and forward as the crank turns and the piston traverses the cylinder. This makes a novel but very practical arrangement, and, so far as experience yet indicates, a perfectly successful one. It has been

found possible to drive this engine up to enormously high speeds, and to secure a smooth and safe motion. The piston-rod stuffing-box is placed at the end of the taper sleeve. This engine has been in operation for six months at the speed of 350 revolutions per minute, making millions of turns, without attention or visible wear. The valve was balanced and the speed was regulated by a throttling governor. The friction was low, as might have been anticipated from the lightness of the running parts.

The results obtained are shown in the following table. They are substantially the same as with the other engines, the speed variations showing increase of friction with velocity while the engine was underloaded; but it will be seen that the friction later became constant, and remained so, substantially, through a wide range of loading, up to the maximum reached. From 175 to 500 revolutions per minute, the friction increased according to the usual law; but, from 500 up to 600 revolutions, the internal friction remained sensibly constant, the loads being light throughout; while, when fully loaded, the speed ranging from about 175 to 912 revolutions per minute, the friction remained very nearly constant, and its variations were irregular. This is well shown by the diagrams which follow this paper.

TABLE III.

THE JARVIS ENGINE, 7″ × 7″.

Friction with Change of Speed.

Steam Pressure Constant at 80 lbs. Engine Running Light. Trial No. 1.

No. of Card.	Spring of Indicator.	Rev's of Engine.	M. E. P. Head.	M. E. P. Crank.	I. H. P. Head.	I. H. P. Crank.	Friction H. P.
1	20	187	2.2	2.9	0.28	0.375	0.637
2	"	187	2.3	2.5	0.293	0 308	0.601
3	"	168	2.8	2.5	0.329	0.280	0 609
4	"	293	1.8	2.0	0.359	0.427	0.786
5	"	293	1.8	2.0	0.359	0.388	0.747
6	"	293	2.2	2.2	0.440	0.428	0.868
7	40	364	1.8	2.2	0 450	0.532	0.982
8	"	380	2.8	1.8	0.724	0.457	1.175
9	"	375	1.8	1.8	0.459	0.461	0.918
10	"	519	1.7	1.5	0 600	0.514	1.114
11		—	—	—	—	—	—
12	"	554	3.2	2.6	1.20	0.95	2.156
13		—	—	—	—	—	—
14	"	554	2.4	3.2	0.90	1.17	2.07
15	"	633	3.4	3.8	1.46	1.58	3.05

The earlier work already reported was mainly on a single class of engines, and it remained a question whether the variation of load in other forms of engine might not cause variation of the internal friction to an important extent, and according to fixed or various law, and, if so, what were the conditions producing such variations and what were those laws. Advantage was taken of the opportunity presented in this series of experiments upon the Lansing engines to determine what was the variation, if any, of the internal friction of the several classes there met with, in this respect. The variety there found was most favorable to this end.

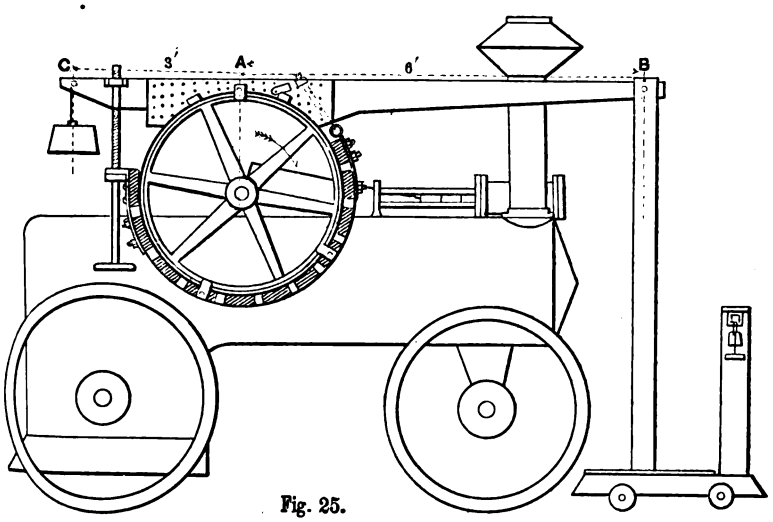

Fig. 25.

They were, as was seen, of various types, including the common slide-valve with locomotive valve-gear; two with automatic valve motions, with balanced valves; one compound engine, condensing and with balanced valve; and the new high-speed engine of singular design which has been just described as the "Jarvis engine."

Table IV. gives the log of the straight-line engine tested by Professor Carpenter and Mr. Preston, and Table V. that of the 7 × 10 slide-valve, the working parts of the standard traction-engine of its builders. The trial of the latter was conducted with the "ahead motion" in gear, adjusting the link as required, to secure variation in the point of cut-off, setting it at $\frac{1}{4}$, $\frac{1}{2}$, and $\frac{7}{8}$ stroke for the several trials. The driving pulley was 42 inches in diameter, and its weight 320 pounds. The brake had an arm six

feet in length. It was found impracticable to prevent some vibration while in operation; but the data may be relied upon as sensibly and satisfactorily correct. Fig. 25 exhibits the method of attachment. The average results were the following:

Friction of 7 × 10 *Slide-Valve Engine.*

Point of Cut-off ⅝.	Internal Friction H. P.
0.25	2.24
0.505	2.75
0.87	2.98

TABLE IV.

STRAIGHT LINE ENGINE, 6″ × 12″. FRICTION WITH CHANGE OF CUT-OFF

No. of Card.	Boiler Pressure.	Indicator on Crank End.				Indicator on Head End.				Total H. P.	Revolutions per Minute.	Rate H. P. to Revolutions.	H. P. Corrected to 265 Rev's.	Average H. P.	Cut-off.
		Area.	Length.	M. E. P.	H. P.	Area.	Length.	M. E. P.	H. P.						
1	36	2.8	3.00	2.80	.511	3.0	3.25	2.76	.517	1.03	253	.004	1.08		
2	35	2.8	2.95	2.85	.519	3.0	3.25	2.94	.551	1.07	253	.004	1.12		
3	34	2.2	2.50	2.64	.464	2.9	2.75	2.65	.479	.94	244	.004	1.03	1.08	⅜
4	34	2.6	2.70	2.89	.494	2.7	3.15	2.57	.451	.95	237	.004	1.06		
5	33	2.8	3.00	2.80	.448	3.2	3.15	3.10	.509	.96	222	.004	1.13		
6	32	2.6	3.00	2.60	.416	3.0	3.15	2.86	.471	.89	222	.004	1.06		
8	38	4.1	3.15	3.90	.739	4.4	3.00	4.40	.858	1.60	262	.006	1.62		
9	39	3.8	3.15	3.62	.694	4.1	3.00	4.10	.808	1.50	263	.006	1.51	1.42	½
10	39	3.8	3.15	3.62	.687	3.4	3.00	3.40	.665	1.36	266	.005	1.36		
11	39	3.0	3.15	2.90	.556	3.1	2.90	3.21	.633	1.19	264	.004	1.19		
12	44	3.7	2.70	3.45	.664	3.70	2.70	4.11	.813	1.48	266	.006	1.47		
13	46	3.8	2.85	4.00	.769	4.05	3.20	3.78	.748	1.52	267	.006	1.51		
14	44.5	3.7	2.85	3.89	.743	4.30	3.20	4.05	.795	1.54	267	.006	1.53	1.50	⅝
15	44	3.6	2.85	3.81	.731	3.80	3.17	3.57	.693	1.42	265	.005	1.42		
16	42	3.8	2.85	4.00	.761	4.05	3.15	3.87	.757	1.52	262	.006	1.54		
17	39	4.1	2.80	4.38	.818	4.40	3.15	4.17	.800	1.62	264	.006	1.63		
18	39	4.6	2.85	4.83	.901	4.90	3.17	4.65	.893	1.79	259	.007	1.83		
19	40	3.5	2.85	3.69	.705	3.85	3.17	3.63	.713	1.42	265	.005	1.42	1.58	½
20	41	4.4	2.85	4.62	.882	4.00	3.15	3.81	.748	1.63	265	.006	1.63		
21	41	4.5	2.85	3.63	.693	3.75	3.15	3.57	.701	1.39	265	.005	1.39		

TABLE V.

TEST FOR FRICTION, WITH CHANGE OF LOAD AND OF POINT OF CUT-OFF.

Lansing Iron Works Engine.

7″ × 10″ Traction Slide Valves.

No. of card.	Steam pressure.	Rev's of engine.	M. E. P.		I. H. P.		Total.	Net load.	Brake, H. P.	Friction, H. P.	Cut-off.
			Head.	Crank.	Head.	Crank.					
1	95	210	.....	.....	.....	.....	2.28	0	0.	2.28	¾
3	105	210	.....	.....	.....	.....	11.54	66	8.27	3.27	"
4	115	210	.....	.....	.....	.....	9.22	52	6.52	2.70	"
5	115	204	.....	.....	.....	.....	9.50	58	6.74	2.76	"
6	110	200	.....	.....	.....	.....	17.49	121	13.80	3.59	"
7	115	202	.....	.....	.....	.....	17.98	121	13.98	4.05	"
Average										3.11	
7	100	230	12.2	12.3	2.91	2.69	5.50	24	3.14	2.26	⅛
8	110	232	12.5	13.0	2.56	2.87	5.43	24	3.18	2.25	"
9	110	228	19.6	20.7	4.34	4.49	8.83	46	6.02	2.81	"
10	110	227	18.6	20.1	4.12	4.38	8.50	46	6.01	2.49	"
11	110	218	41.3	44.2	8.75	9.17	17.92	115	14.38	3.54	"
12	115	202	43.2	47.7	8.28	9.17	17.45	122	14.05	3.40	"
13	115	220	44.3	47.1	9.47	9.86	19.33	132	16.55	2.78	"
14	115	200	54.0	59.7	11.55	12.50	24.05	170	21.32	2.63	"
15	115	200	56.1	62.9	10.91	11.98	22.89	167	19.04	3.85	"
Average										2.89	
1	55	216	6.2	4.4	1.30	0.90	2.20	0.	0.	2.20	¼
2	55	216	5.6	4.9	1.18	1.01	2.19	0.	0.	2.19	"
Average										2.195	
3	70	220	5.0	5.7	1.06	1.19	2.25	0.	0.	2.25	½
4	65	218	4.5	5.6	0.95	1.16	2.11	0.	0.	2.11	"
Average										2.18	
5	75	212	5.0	6.3	1.03	1.27	2.30	0.	0.	2.30	¾
6	80	212	5.6	5.8	1.15	1.13	2.28	0.	0.	2.28	"
Average										2.29	

FRICTION WITH CHANGE OF LOAD.

Lansing Iron Works.

7 × 10 Slide Valve.

Cut-off ¼ Stroke.			Cut-off ¾ Stroke.		
Speed.	Average F.H.P.	No. trials.	Speed.	Average F.H.P.	No. trials.
200	3.24	2	200	3.59	1
202	3.40	1	202	4.05	1
218	3.54	1	204	2.76	1
220	2.78	1	210	2.75	3
227	2.49	1			
228	2.81	1			
230	2.26	1			
232	2.25	1			

Plotting the curve thus obtained, it is at once seen that the friction is decidedly increased with increase of load and decreased in the ratio of expansion. The first seven cards were calculated, assuming the head and back areas of piston equal, and thus obtaining the mean effective H. P.; while the other cards were worked up as indicated in the log. These results with changing cut-off were different from those secured by variation of load at constant ratio of expansion.

Placing a variable load on the brake arm, and thus varying the power from 0 to 21 H. P., the point of cut-off being retained constant, it was found that the friction was very nearly constant, and not variable with the load. The distribution of friction was then ascertained by a careful trial, the results of which are presented in another paper. There, as in the other trials described in these papers, the brake was handled substantially as described in papers already read before the Society.

The 8 × 12 automatic engine, which had been in use a year, and was thus well worked into smooth running order, was tested in the erecting room of the shops of the Lansing Co., bolted down on two blocks which were not heavy, but which answered their purpose fairly well. The log of the trial is given in full, and shows the internal friction to have been practically constant for all loads, and to have slightly increased with *decrease* of speed. The speed adjustments were made at the governor.

TABLE VI.

FRICTION WITH CHANGE OF LOAD.

Automatic Engine, 8″ × 12″.

Lansing Iron Works.

No. of Card.	Head Indicator.		Crank Indicator.		Total I. H. P.	Revolutions.	Brake, H. P.	Brake, load.	Friction, H. P.	Cut-off, % of Stroke.	
	M. E. P.	H. P.	M. E. P.	H. P.						Head.	Crank.
1	5. 2	1.74	3.4	1.10	2.84	220	0	0	2.84	18	8
2	3. 2	1.07	4.4	1.43	2.50	220	0	0	2.50	10	11
3	21. 2	6.44	23.1	6.84	13.28	200	10.37	45.5	2.91	18	24
4	19. 0	6.35	23.8	7.75	14.10	220	11.41	45.5	2.69	18	26
5	25. 1	8.39	29.5	9.64	18.04	220	15.42	60.5	2.62	35	33
6	23. 2	7.76	28.3	9.30	17.06	220	14.42	57.5	2.64	22	22
7	28. 5	9.53	29.5	9.57	19.10	220	16.42	65.5	2.68	26	31
8	23. 8	8.50	23.7	8.82	16.80	235	14.36	53.5	2.44	21	28
9	33.85	9.43	28.5	9.88	19.31	260	16.92	58.5	2.39	22	29
10	21. 2	7.73	24.1	8.62	16.35	240	14.69	55.5	1.66	29	28

TABLE VI.—*Continued.*

FRICTION WITH CHANGE OF SPEED.

Revolutions.	Average F. H. P.	No. Trials.
200	2 91	1
220	2 63	6
235	2 44	1
260	2 39	1

The 12 × 18 inch automatic engine was a new machine and had not been used; it had only been in operation at the shop long enough to determine the set of its valves and the correctness of its construction. Its internal friction was naturally high, but it is presumed that the variation, if any, would follow the same law as when the engine has attained a smoother condition by long service. The brake arm was 7 feet long, suspended with a counterpoise which removed all its weight from the brake wheel and engine bearings. A continuous stream of water kept its temperature down. The steam supply was not equal to that required by the engine at full power, and it could not, for that reason, be worked at its rated capacity. Its details had the following dimensions: Rod $2\frac{1}{4}$ in. diameter, main shaft 5 in.; main pulley 6 ft.; weight 1,700 pounds; weight of shaft and crank 900 pounds. The log is given below, and the results of the trial indicate the usual condition: nearly constant friction loss, independent, in even its minute variations, of the load on the engine. No sensible change of friction was found, for the changes of speed observed, due to the shortness of steam supply. This engine was also finally taken apart and tested for distribution of internal friction, as elsewhere described, a transmission dynamometer being substituted for the brake used in these trials, the engine driven by an external source of power, and part after part taken off to give the friction of each of its important elements.

TABLE VII.

FRICTION WITH CHANGE OF LOAD.

Automatic Engine, 12″ × 18″.

Lansing Iron Works. Steam Pressure, 80 lbs.

No. of Card.	Revolutions per Minute.	Head Indicator.		Crank Indicator.		Total I. H. P.	Brake Load.	Brake H. P.	Friction H. P.
		M. E. P.	H. P.	M. E. P.	H. P.				
1	190	8.6	8.40	3.0	2.88	11.20	0.	0.	11.20
2	190	8.5	8.30	2.8	2.89	11.19	0.	0.	11.19
3	190	8.5	8.30	2.6	2.50	10.80	0.	0.	10.80
4	180	4.4	4.08	4.6	4.19	8.27	0.	0.	9.27
5	189	4.8	4.44	4.75	4.32	8.76	0.	0.	8.76
6	182	7.75	7.25	6.5	5.99	13.24	11.5	2.79	10.45
7	182	6.7	6.27	7.9	7.28	13.55	11.5	2.79	10.76
8	187	8.1	7.79	7.2	6.81	14.60	21.5	5.35	8.25
9	187	9.25	8.89	8.4	7.95	16.84	22.5	5.61	11.23
10	180	9.5	8.89	10.75	9.90	18.39	23.5	7.89	11.00
11	192	14.3	12.14	7.5	7.29	19.43	46.0	11.78	7.65
12	192	15.25	15.05	5.9	5.73	20.78	49.0	12.54	8.24
13	192	14.4	14.21	7.25	7.04	21.25	49.0	12.54	8.71
14	192	16.5	16.28	5.70	5.54	21.82	49.0	12.54	9.28
15	190	16.3	15.92	9.50	9.13	25.05	72.5	18.37	6.68
16	192	15.9	15.69	10.25	9.96	25.65	72.5	18.56	7.09
17	192	17.75	17.57	10.00	9.96	27.53	77.5	19.84	7.69
18	185	22.5	21.40	16.00	14.98	36.38	115.5	28.49	7.89
19	185	22.75	21.68	16.25	15.26	36.94	120.5	29.72	7.22
20	180	26.0	24.06	18.90	17.21	41.27	142.0	34.08	7.19
21	180	24.4	22.57	20.90	19.04	41.61	142.0	34.08	7.53
22	180	25.6	23.69	23.25	21.22	44.91	150.5	36.12	8.79
23	175	30.1	27.07	34.30	30.37	57.44	210.5	49.11	8.33
24	175	30.9	27.80	34.90	30.90	58.70	209.5	48.89	9.81

The tandem compound engine of the same builders was 28 inches stroke of piston, and the two cylinders 14 and 21 inches in diameter, both secured on one rod and driving the same crank. The exhaust steam from the high-pressure cylinder is conveyed to the low-pressure engine through a pipe, which is also a sleeve for the valve-stem of the former. This valve stem passes also through a hollow stem driving the valve of the low-pressure engine. The latter is driven by a fixed eccentric, while the high-pressure valve is actuated by a loose eccentric, which latter is adjusted momentarily by an automatic system of governing. The regular speed is 200 revolutions per minute, the engine non-condensing. The machine was tested in the erecting shop, like the preceding, and in substantially the same manner. It was new,

and its friction waste therefore abnormally high. The same brake was used as before, and it worked admirably and gave, probably, thoroughly reliable data. The friction was 28 H. P., and very constant through the whole series of trials. Three light cards, the engine being entirely unloaded, give an average of 28.85 H. P., and nineteen cards at various loads give an average of 27.33 H. P. The steam pressure was very evenly held at 85 pounds by gauge; but a contracted supply pipe caused some fall of pressure *en route* to the engine at heavy loads. This produced some falling off of speed. The method of operation was, in these tests, usually, to first apply the brake load, then to allow the engine to fully reach the speed desired, and then, when at constant speed, to take indicator diagrams, record of steam pressure, speed and the brake load as nearly simultaneously as possible. Cards were taken earlier by driving the engine with low-pressure cylinder alone, thus securing a measure of its friction as a single cylinder engine; two sets of cards thus taken, light, gave a friction of 32.6 and 34.6 H. P. respectively. Eight cards, the entire engine loaded, gave 20.2 H. P. at 150 revolutions, and 31.6 H. P. at 175 revolutions. The trial on which the conclusions of this paper were based was made later, after several days' operation, and the valves readjusted to give a better distribution of work. The last card obtained was taken two or three weeks later while at regular work. The variation of speed noticed was unaccompanied by any observable variation of internal friction. The following is the log:

TABLE VIII.

FRICTION WITH CHANGE OF LOAD.

Lansing Iron Works. Tandem Compound Engine.

No. of Card.	Revolutions.	High-Pressure Cylinder, 14″ × 20″.					Low-Pressure Engine, 21″ × 22″.					I. H. P. for both Cylinders.	Brake Load.	Brake H. P.	Friction H. P.
		M. E. P.		I. H. P.			M. E. P.		I. H. P.						
		Crank.	Head.	Crank.	Head.	Total.	Crank.	Head.	Crank.	Head.	Total.				
2	165	23.3	15.5	29.12	19.88	49.00	1.4	1.8	3.97	2.89	6.86	55.86	123	27.12	28.74
3	168	23.2	15.3	29.52	19.98	49.50	1.3	1.4	3.93	4.12	8.05	57.55	131	29.26	28.29
4	138	27.3	23.7	28.53	25.40	53.93	5.7	5.8	12.06	13.98	26.04	79.97	284	52.15	27.82
5	152	25.7	21.8	29.14	28.10	57.24	5.3	4.9	13.89	13.03	26.92	84.16	290	58.81	25.35
6	168	24.2	21.5	30.80	28.07	58.87	2.8	1.7	9.79	4.99	14.78	73.65	202	45.25	28.40
7	160	25.2	23.8	30.53	29.60	60.13	4.0	3.9	11.04	10.91	21.95	82.08	257	54.83	27.25
8	165	24.6	22.7	30.74	29.11	59.85	3.5	4.1	9.69	11.82	21.51	81.36	252	55.44	25.92
9	165	24.4	22.3	30.49	29.69	60.18	4.0	3.7	11.55	10.63	22.18	82.36	244	53.67	28.69
10	159	25.6	24.3	30.83	30.03	60.86	4.5	4.4	12.34	12.24	24.58	85.44	289	61.27	24.17
11	159	25.5	23.9	30.70	29.55	60.25	4.55	4.8	12.42	13.37	25.79	86.04	292	61.90	24.14
12	183	19.4	14.9	26.38	21.19	47.57	0.55	0.56	1.76	1.78	3.54	51.11	83	20.26	30.85
13	174	22.8	19.4	30.05	26.24	56.29	2.00	1.7	7.00	5.16	12.16	68.45	145	33.75	34.70
14	160	25.9	24.2	31.38	30.10	61.48	4.2	4.9	11.58	13.71	25.29	86.77	263	56.11	30.66
15	162	24.3	23.0	29.82	28.96	58.78	3.7	4.1	10.26	11.61	21.87	80.65	256	55.28	25.37
16	158	25.7	23.4	30.76	28 76	59.52	4.1	4.2	11.18	11.61	22.79	82.31	261	55.00	27.31
17	160	26.5	25.5	32.11	31.73	63.84	4.5	4.5	12.42	12.60	25.02	88.86	298	63.57	25.29
18	156	27.1	25.2	32.00	30.53	62.53	4.6	5.45	12.38	12.56	24.94	87.47	283	58.85	28.62
19	136	27.2	25.0	28.01	26 43	54 44	7.0	6.5	16.46	15 45	31.91	86.35	333	60.38	25.97
20	130	27.4	24.6	26.96	24.88	51.84	7.0	6.8	15.73	15.46	31.19	83.03	353	61.19	21.84
21	156	16.8	4.7	19.83	5.70	25.53	1.0	0.4	2.60	1.09	3.69	29.22	0.	0.	29.22
22	150	12 3	6.8	13.96	7.92	21.88	—	—	—	—	—	—	—	—	—
23	156	14.4	6.6	17.04	8.00	25.04	0.55	0.4	1.49	1.10	2 59	27.63	0.	0.	27.63
24	158	14.9	4.7	17.80	5.76	23.56	1.5	0.75	4.07	2.06	6.13	29.69	0.	0.	29.69
A	190	26.3	26.0	37.92	38.39	76.31	7.9	7.5	25.88	24.91	50.79	127.10	—	—	—

Still another most interesting and important investigation was made upon a compound *condensing* engine, built by the same works, as a part of an electric lighting plant. Several such engines have been constructed, each consisting of independent engines in pairs, the small engine exhausting high-pressure steam into the other cylinder steam chest, and the exhaust of the larger passing over into a condenser. The main shafts are connected by a coupling in such manner that they may be at any moment separated and worked independently, should accident to either make it necessary, or should but a small amount of power be needed at any time. The two engines are placed about 25 feet apart, and connected by a 4-inch pipe. During these trials the brake was attached to the small engine flywheel, and the tests were conducted as nearly possible in the way already described, the same brake being used as when making trial of the automatic engine last referred to. The high-pressure engine, in this case, had an automatic governor, and the low-pressure cylinder had an eccentric fixed to cut off at $\frac{7}{8}$ stroke. The two engines were first operated independently, and then together. The engine friction was unquestionably independent of the amount of power produced by either or by both engines. The log of these last trials is given below.

TABLE IX.

FRICTION WITH CHANGE OF LOAD.

Lansing Iron Works. Compound Condensing Engine.

No. of Card.	Revolutions.	Low-Pressure Cylinder, 22″ × 18″					High-Press. Cylinder, 21″ × 20″.					I.H.P. for both Cyls.	Brake Load.	Brake H. P.	Friction H. P.
		M. E. P.		I. H. P.		I. H.P	M. E. P.		I. H. P.		I.H.P				
		Head.	Crank.	Head.	Crank.	Total.	Head.	Crank.	Head.	Crank.	Total.				
1	187	.....	.....	.....	.....	.....	.....	.....	.....	.....	.....	.....	.....	.....	.....
2	190	1.00	0.85	3.42	2.61	6.03	.....	.....	.....	.....	.....	.....	0.	0.	.....
3	190	1.00	1.15	3.42	3.62	7.04	3.0	4.5	3.50	5.03	8.53	15.57	0.	0.	15.92
4	196	0.05	0.3	1.72	1.03	2.75	6.8	9.5	7.63	10.24	17.87	15.12	0.	0.	15.07
5	196	0.05	0.3	1.72	1.03	2.75	6.1	10.4	6.90	11.25	18.15	15.40	0.	0.	15.35
6	196	0.05	0.3	1.72	1.03	2.75	7.2	8.9	8.10	9.62	17.72	14.97	0.	0.	14.92
7	208	3.50	3.5	12.72	12.48	25.20	29.1	36.0	34.60	41.25	75.85	101.05	310	85.99	15.06
8	208	4.15	4.65	15.16	16.78	31.88	35.5	39.7	42.18	43.75	85.93	117.81	370	102.61	15.20
9	208	2.90	3.0	10.54	10.69	21.23	26.3	31.2	31.27	35.77	67.04	88.27	270	74.74	13.53
10	208	4.00	4.2	14.55	14.97	29.52	34.1	38.0	40.50	44.28	84.78	114.30	360	99.84	15.46
11	208	2.00	2.1	7.28	7.49	14.77	20.0	20.3	23.02	22.55	45.57	60.34	155	44.92	17.42
12	208	2.10	2.2	7.63	7.84	15.47	22.5	28.9	26.77	33.00	59.77	75.24	210	58.24	17.00
13	208	2.30	2.6	8.46	9.34	17.82	28.4	37.5	32.68	42.93	75.61	93.43	280	77.62	15.81
14	208	1.00	1.5	3.64	5.29	8.93	11.3	12.3	11.78	14.10	25.88	34.81	65	18.03	16.78
15	208	0.95	1.3	3.52	4.61	8.13	11.3	12.3	11.78	14.10	25.88	34.01	62	17.20	16.81

The new engine of Mr. Jarvis, to which reference has already been made, afforded an excellent opportunity to secure data of value relating to the method of variation of internal friction of engine, or its constancy. Cards were taken from this engine, up to speeds of above 900 revolutions per minute, with the Crosby Indicator. Motion was given the instrument through a rod at-

THE JARVIS ENGINE.
7 inch Bore 7 inch Stroke
— BUILT BY —
Lansing Iron and Engine Works.

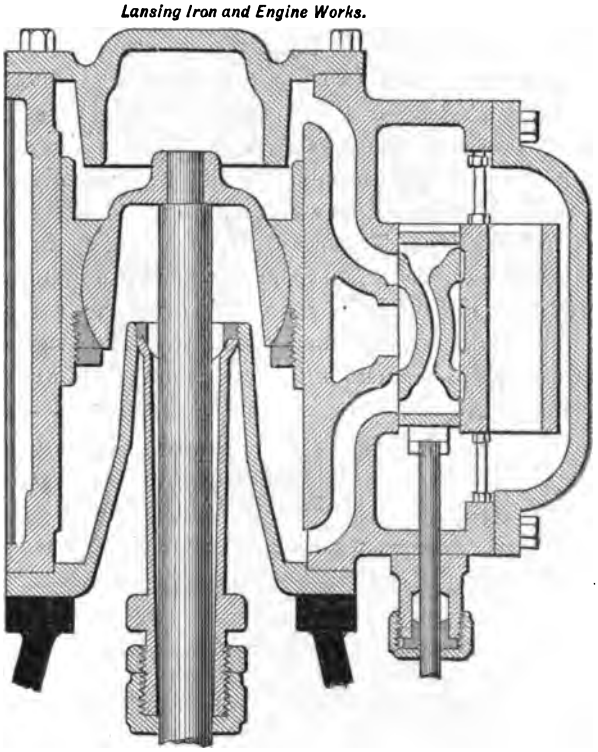

TRIAL ENGINE
Fig. 27.

tached to the piston and playing through a stuffing-box in the head, and connected to a lever reducing gear. No serious difficulty was experienced in taking diagrams at the highest speeds reached. Some difficulty was experienced in securing efficient lubrication of the brake when the speed exceeded about 600. The friction of the engine, as already remarked, was small, the number of parts being less than usual, and their weight very little. Table X. exhibits the data collected in the second trial—the first

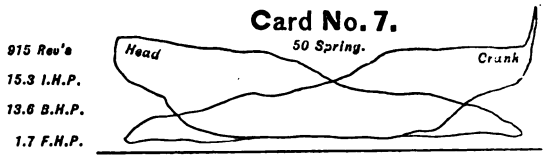
Card No. 7.
50 Spring.
Head
Crank
915 Rev's
15.3 I.H.P.
13.6 B.H.P.
1.7 F.H.P.

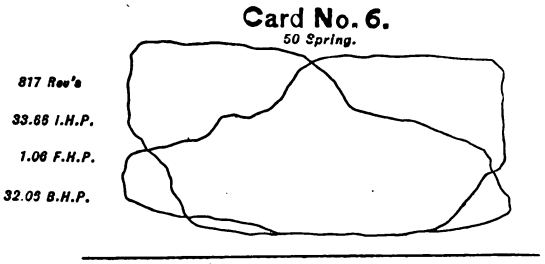
Card No. 6.
50 Spring.
817 Rev's
33.68 I.H.P.
1.06 F.H.P.
32.03 B.H.P.

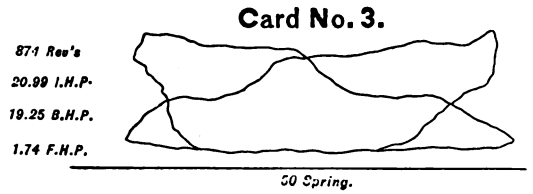
Card No. 3.
871 Rev's
20.99 I.H.P.
19.25 B.H.P.
1.74 F.H.P.
50 Spring.

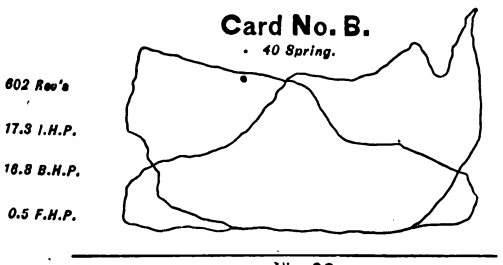
Card No. B.
40 Spring.
602 Rev's
17.3 I.H.P.
16.8 B.H.P.
0.5 F.H.P.

Fig. 26.

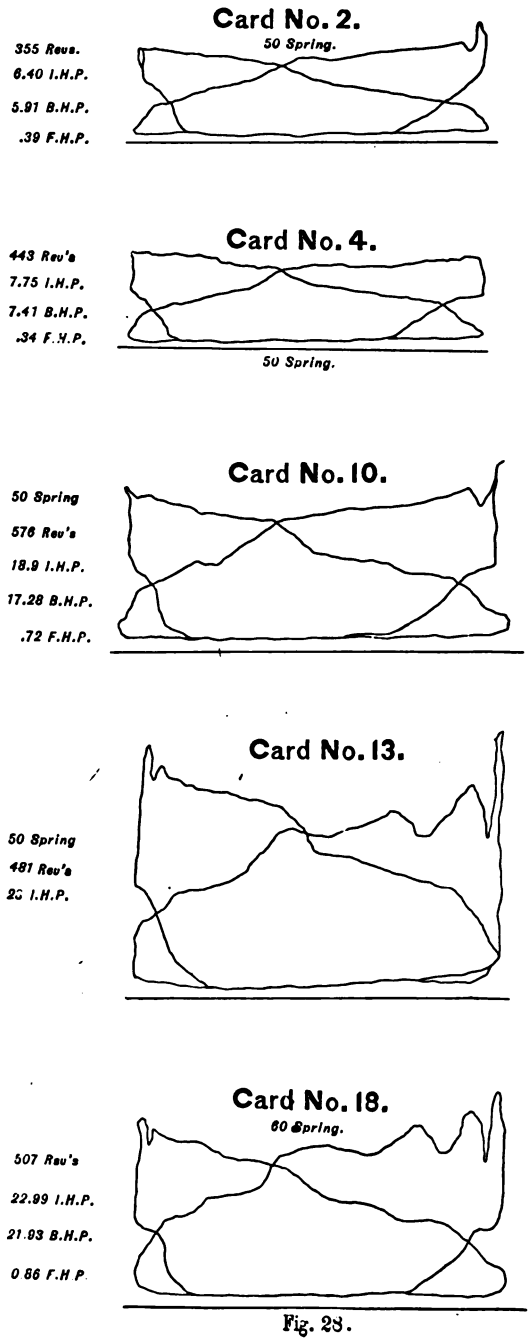
Card No. 2.
50 Spring.
355 Revs.
6.40 I.H.P.
5.91 B.H.P.
.39 F.H.P.
Card No. 4.
443 Rev's
7.75 I.H.P.
7.41 B.H.P.
.34 F.H.P.
50 Spring.
Card No. 10.
50 Spring
576 Rev's
18.9 I.H.P.
17.28 B.H.P.
.72 F.H.P.
Card No. 13.
50 Spring
481 Rev's
2C I.H.P.
Card No. 18.
60 Spring.
507 Rev's
22.99 I.H.P.
21.93 B.H.P.
0.86 F.H.P.

Fig. 28.

has already been given—and Table XI. those obtained in the course of the third test. They are satisfactory as showing the independence of the internal friction of this engine and the load. The effect of speed on changes of friction of engine has already been fully shown. Figs. 26 and 28 show the form of cards taken, and Fig. 27 shows the peculiar design of steam cylinder.

Tables XII., *et seq.*, are added in order that the results of earlier trials of other engines, and by other observers, may be compared with those derived by this peculiarly valuable series of investigations, which has so fully corroborated the earlier deductions of the writer. In conclusion, the writer would take advantage of

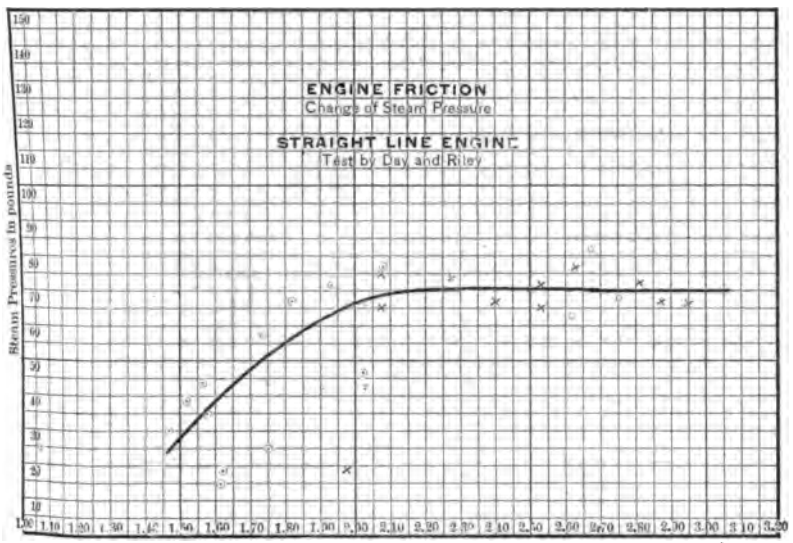

Fig. 21

this opportunity to express his gratification with the completeness and accuracy of the work of the observers, to record and publish which is the object of this paper, and to acknowledge with great pleasure and satisfaction both the skill and patience of the investigators and the value of their work. The interest of the proprietors and manager of the Lansing Engine Works, leading them to take a vast amount of trouble and some expense in aiding the observers, entitles them also to both great credit and hearty thanks.

Figures 21 to 24, inclusive, exhibit, better than can any written description, the facts and the phenomena revealed by the several series of investigations which the writer has now had the privilege

of presenting, and are a fitting supplement to the text in which the results of such important researches are first published.

Fig. 21 is the graphical representation of Day & Riley's observations, as exhibited in earlier papers of this series, and shows the method of variation of engine friction with change of steam pressure from 20 to 70 pounds per square inch. It is obtained by collating the several series of trials indicated by the different forms of dot on the plate, and shows plainly a variation from the lowest to the highest pressures, at which latter point the variation of power observed is due to other causes, and remains constant as a function of the steam pressure. The considerable range of deviation from the curve taken as representative of the mean is due to varying efficiency of lubrication, probably, and well exhibits the importance of maintaining a good supply of lubricating material and a constant flow of oil. These variations are seen to be less at high than at low pressures; the normal working conditions being approached, the magnitude of the engine friction tends to become more perfectly constant as a function of pressure in the steam-chest. The variation of friction indicated at the lower pressures is probably here due, to some extent at least, to the varying distribution of steam effected by the action of the automatic system of regulation. This method of variation is obviously not an important matter as affecting ordinary engines in ordinary work. The other methods of variation, as functions of speed and of load, are much more notable.

Fig. 22 is especially interesting and instructive as exhibiting the variation of internal friction of engine with change of engine speed. The plate shows this variation as determined by test of four engines: the Jarvis engine, under two sets of conditions; the Straight Line engine; the 8 × 12 Automatic engine; and the Tandem Compound engine. The first named, when working unloaded, gradually increases its friction resistance as speed increases, irregularly, but approximately as a direct function of the speed, and gives a lower total at all speeds than the loaded engine at similar speeds. The difference is small, but is sufficient to be easily detected and measured. The same engine, when loaded, gives an increase of internal friction proportionally with increase of speed, up to about 500 revolutions per minute, then, changing its rate of increase, preserves the new rate up to its limit of velocity, above 600 revolutions per minute. The speed attained light, 912 revolutions, is probably the highest speed at which any

engine has ever yet been given a systematic trial to determine these quantities. Curves 1 and 2 of the Straight Line engine are irregular, and too much so to reveal any definite law, taken by themselves, but, taken with the other evidence presented, may be considered as fully corroboratory of the conclusions deduced. Test No. 3 gives a very regular and satisfactory curve, and this accords perfectly with the others in exhibiting the law of variation

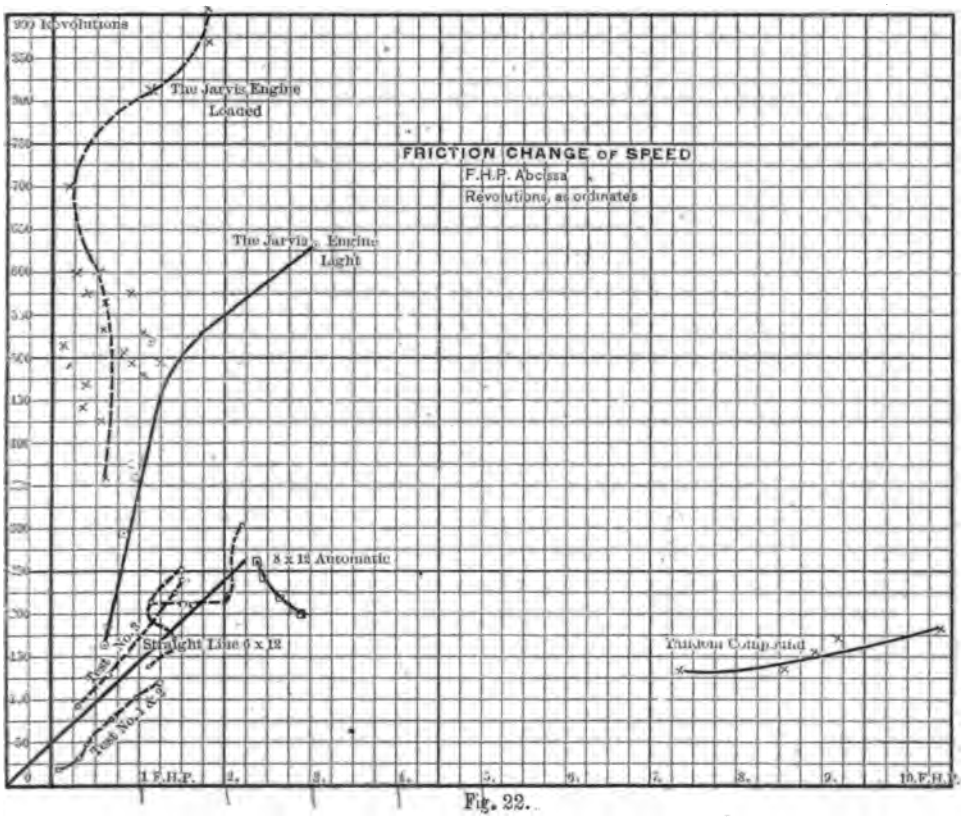

Fig. 22.

of friction with engine speed. The full line drawn through this group of observations is considered as fairly representative of the mean result of all tests on this engine, and is a straight line, the representative of the law previously discovered and stated. The curve for the 8 × 12 Automatic engine is anomalous, and differs from every other curve obtained, in falling with rising speed. It is evident that this engine differs, in some respect, from all ordinary engines in its law of variation of internal friction with engine

of presenting, and are a fitting supplement to the text in which the results of such important researches are first published.

Fig. 21 is the graphical representation of Day & Riley's observations, as exhibited in earlier papers of this series, and shows the method of variation of engine friction with change of steam pressure from 20 to 70 pounds per square inch. It is obtained by collating the several series of trials indicated by the different forms of dot on the plate, and shows plainly a variation from the lowest to the highest pressures, at which latter point the variation of power observed is due to other causes, and remains constant as a function of the steam pressure. The considerable range of deviation from the curve taken as representative of the mean is due to varying efficiency of lubrication, probably, and well exhibits the importance of maintaining a good supply of lubricating material and a constant flow of oil. These variations are seen to be less at high than at low pressures; the normal working conditions being approached, the magnitude of the engine friction tends to become more perfectly constant as a function of pressure in the steam-chest. The variation of friction indicated at the lower pressures is probably here due, to some extent at least, to the varying distribution of steam effected by the action of the automatic system of regulation. This method of variation is obviously not an important matter as affecting ordinary engines in ordinary work. The other methods of variation, as functions of speed and of load, are much more notable.

Fig. 22 is especially interesting and instructive as exhibiting the variation of internal friction of engine with change of engine speed. The plate shows this variation as determined by test of four engines: the Jarvis engine, under two sets of conditions; the Straight Line engine; the 8 × 12 Automatic engine; and the Tandem Compound engine. The first named, when working unloaded, gradually increases its friction resistance as speed increases, irregularly, but approximately as a direct function of the speed, and gives a lower total at all speeds than the loaded engine at similar speeds. The difference is small, but is sufficient to be easily detected and measured. The same engine, when loaded, gives an increase of internal friction proportionally with increase of speed, up to about 500 revolutions per minute, then, changing its rate of increase, preserves the new rate up to its limit of velocity, above 600 revolutions per minute. The speed attained light, 912 revolutions, is probably the highest speed at which any

engine has ever yet been given a systematic trial to determine these quantities. Curves 1 and 2 of the Straight Line engine are irregular, and too much so to reveal any definite law, taken by themselves, but, taken with the other evidence presented, may be considered as fully corroboratory of the conclusions deduced. Test No. 3 gives a very regular and satisfactory curve, and this accords perfectly with the others in exhibiting the law of variation

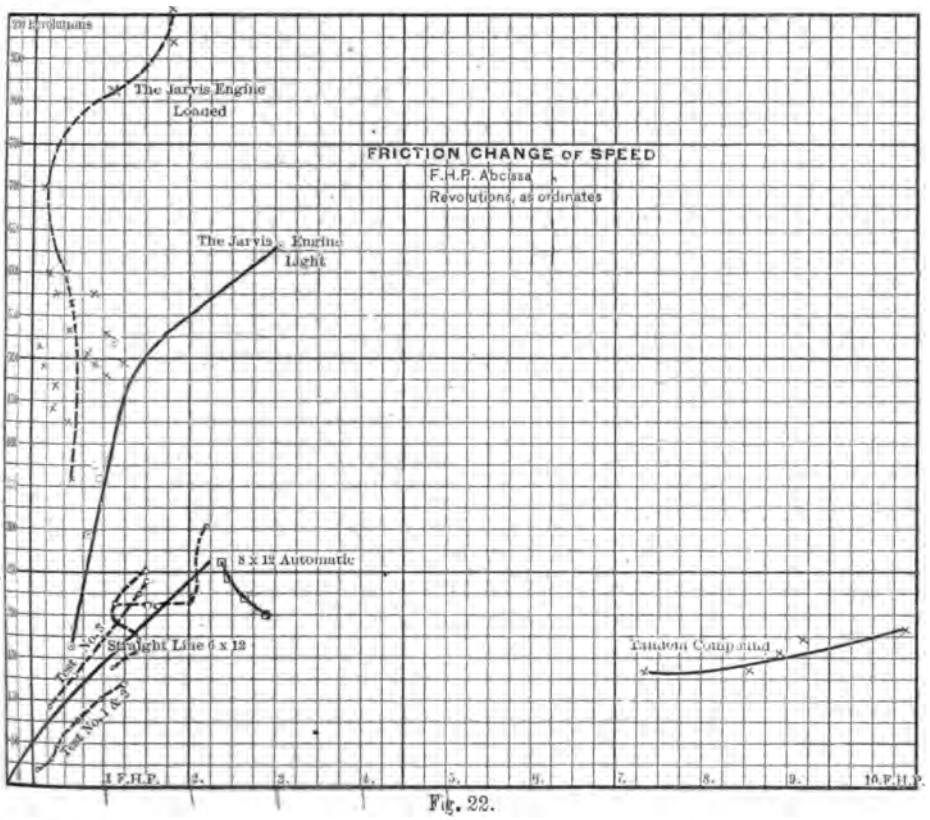

Fig. 22.

of friction with engine speed. The full line drawn through this group of observations is considered as fairly representative of the mean result of all tests on this engine, and is a straight line, the representative of the law previously discovered and stated. The curve for the 8 × 12 Automatic engine is anomalous, and differs from every other curve obtained, in falling with rising speed. It is evident that this engine differs, in some respect, from all ordinary engines in its law of variation of internal friction with engine

of presenting, and are a fitting supplement to the text in which the results of such important researches are first published.

Fig. 21 is the graphical representation of Day & Riley's observations, as exhibited in earlier papers of this series, and shows the method of variation of engine friction with change of steam pressure from 20 to 70 pounds per square inch. It is obtained by collating the several series of trials indicated by the different forms of dot on the plate, and shows plainly a variation from the lowest to the highest pressures, at which latter point the variation of power observed is due to other causes, and remains constant as a function of the steam pressure. The considerable range of deviation from the curve taken as representative of the mean is due to varying efficiency of lubrication, probably, and well exhibits the importance of maintaining a good supply of lubricating material and a constant flow of oil. These variations are seen to be less at high than at low pressures; the normal working conditions being approached, the magnitude of the engine friction tends to become more perfectly constant as a function of pressure in the steam-chest. The variation of friction indicated at the lower pressures is probably here due, to some extent at least, to the varying distribution of steam effected by the action of the automatic system of regulation. This method of variation is obviously not an important matter as affecting ordinary engines in ordinary work. The other methods of variation, as functions of speed and of load, are much more notable.

Fig. 22 is especially interesting and instructive as exhibiting the variation of internal friction of engine with change of engine speed. The plate shows this variation as determined by test of four engines: the Jarvis engine, under two sets of conditions; the Straight Line engine; the 8 × 12 Automatic engine; and the Tandem Compound engine. The first named, when working unloaded, gradually increases its friction resistance as speed increases, irregularly, but approximately as a direct function of the speed, and gives a lower total at all speeds than the loaded engine at similar speeds. The difference is small, but is sufficient to be easily detected and measured. The same engine, when loaded, gives an increase of internal friction proportionally with increase of speed, up to about 500 revolutions per minute, then, changing its rate of increase, preserves the new rate up to its limit of velocity, above 600 revolutions per minute. The speed attained light, 912 revolutions, is probably the highest speed at which any

engine has ever yet been given a systematic trial to determine these quantities. Curves 1 and 2 of the Straight Line engine are irregular, and too much so to reveal any definite law, taken by themselves, but, taken with the other evidence presented, may be considered as fully corroboratory of the conclusions deduced. Test No. 3 gives a very regular and satisfactory curve, and this accords perfectly with the others in exhibiting the law of variation

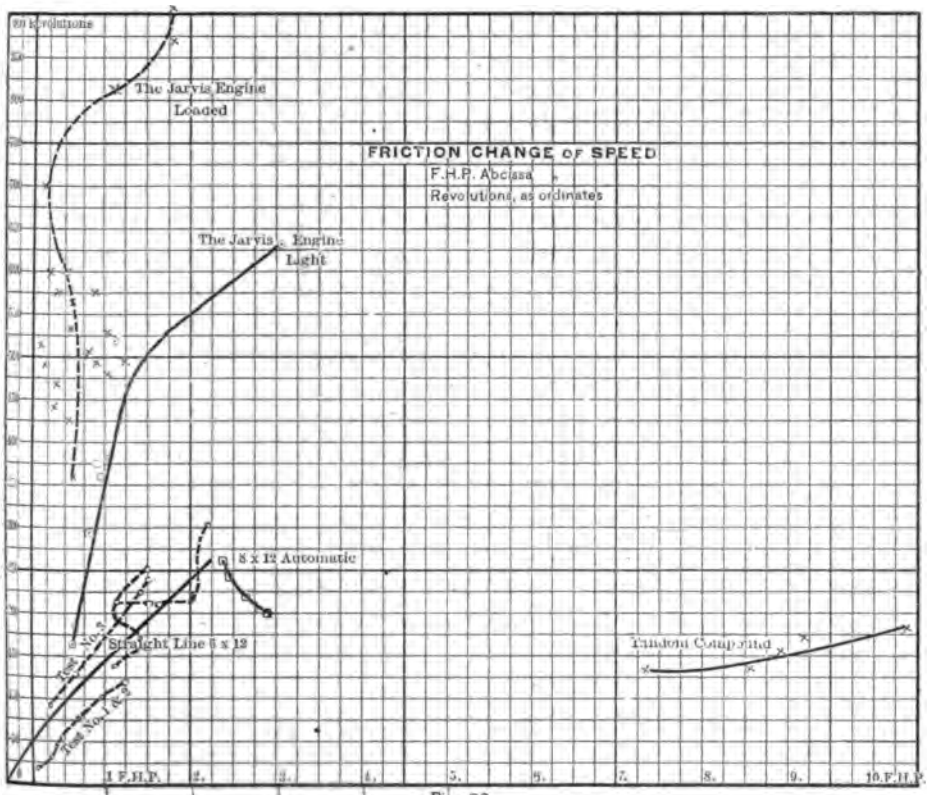

Fig. 22.

of friction with engine speed. The full line drawn through this group of observations is considered as fairly representative of the mean result of all tests on this engine, and is a straight line, the representative of the law previously discovered and stated. The curve for the 8 × 12 Automatic engine is anomalous, and differs from every other curve obtained, in falling with rising speed. It is evident that this engine differs, in some respect, from all ordinary engines in its law of variation of internal friction with engine

speed. The smoothness of the curve would indicate that this is a real attribute of this engine, and not a mere accident of the time or of the construction of the machine. It would be interesting to push the trials of this engine farther, and to ascertain what is the final outcome of this apparent anomaly at higher speeds, and also to learn where the lower limit of the curve comes into view. The Tandem Compound shows precisely the same general law as the other forms of engine, but it is subject to less variation than any other, the curve slowly rising, as the speed increases, throughout the whole range of experiment.

All these variations of engine friction have an important bearing upon the theory of the true commercial efficiency of engines. It is so important a matter that no correct or satisfactory theory of the steam engine can be constructed until the influence of this form of loss and waste can be determined and can be introduced into the general treatment of that subject. There thus remains for investigation the mathematical theory of efficiencies of the steam engine as affected by friction wastes, and the determination of the conditions of maximum total and commercial efficiency for every engine to which it may be attempted to apply that theory. The solution of the problems thus arising in the introduction of the more commonly employed engines has an extraordinary importance for the engineer, and especially for the builder and for the user. Neither can intelligently select and operate an engine in any given locality, or under any given set of external conditions, so as to secure highest efficiency, without first solving this class of problems in relation to that engine or class of engines. Rankine's graphical method, as modified by the writer, and as applied to modern engines in the manner shown in earlier papers presented to the American Society of Mechanical Engineers, supplied the most convenient and satisfactory method of effecting the solution of these problems.*

Fig. 23 similarly illustrates the variation of engine friction with variation of the point of cut-off and ratio of expansion. In all three cases taken, the variation of internal resistance of engine is visibly altered by the variation of the expansion, slowly but observably rising with diminishing expansion. The same engine, tested by the two pairs of observers, in 1887 and 1888, shows different absolute magnitudes of friction, the engine having had a year's work in the interval, but the law of variation is the same

* Trans., Vol. II., p. 125; Vol. III., p. 245.

and the rate of variation is nearly equal in both cases, although the friction is seen to be more nearly constant in the first set of trials. In the third curve also, that in which the work on the 7 × 10 traction engine is illustrated, the same law and the same rate of variation shown by the first of these trials, 1887, are exhibited. All show plainly the fact that, other things equal, the friction of the engine varies slightly with change of ratio of expansion, the amount increasing as the point of cut-off is advanced and the engine is set to "follow" further. It must be kept in mind, however, that the ratio of friction of engine to total power of

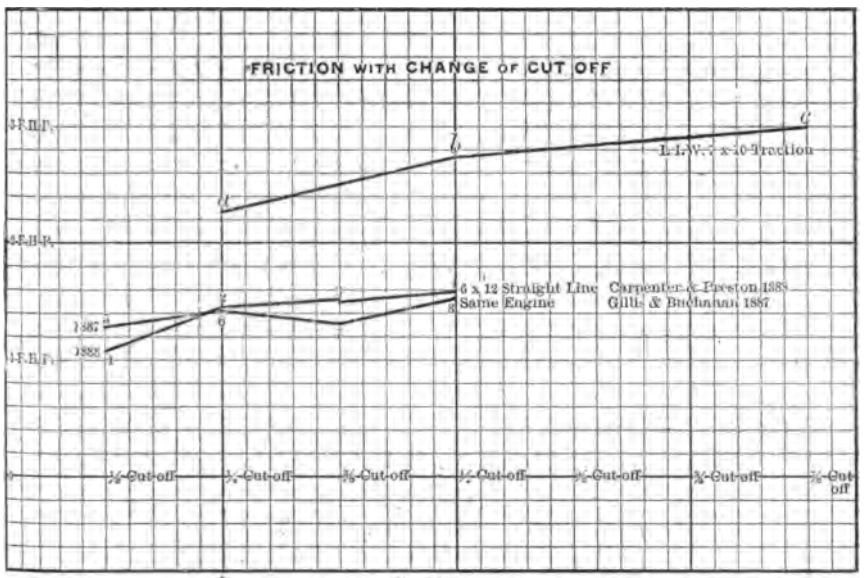

Fig. 23

engine is continually varying in the opposite direction, and it does not at all follow from these observations, as here graphically illustrated, that the shorter cut-off and lower powers of engine are, on the whole, more economical than the higher. The true point of maximum economy and efficiency, all conditions being regarded, can only be ascertained by the application of the determined facts in the complete theory of the several efficiencies of the engines studied.

Fig. 24 is the graphical summary of the work done to ascertain the method and extent of variation of the friction of the engine with change of load, other conditions being, so far as possible, retained constant. The lowest curve on the plate is that obtained

from the work on the Jarvis engine, and is considerably lower than any other, absolutely and relatively. It is a straight line, is parallel to the axis of abscissæ, and indicates constant waste by friction, at all loads and powers. The next curve is that of the 8 × 12 Automatic engine, which is much more variable and less satisfactory as a measure of the true loss; but it gives a mean, as shown by the full line, very nearly representative of constant friction; the same is true of the 7 × 10 Traction engine, and of the 7 × 12 Straight Line engine. All give a mean which is practically independent of the power exerted by the engine. The widest range of work is that obtained with the compound condensing engine, and extends from zero up to nearly 100 H. P., the brake being the measure. This also gives some irregularity of result; but its mean is a constant at all powers, and is independent of the load on the engine, so far as can be detected in this series of observations. Finally, the compound tandem engine, a new engine, naturally gives a high measure, comparatively, of the internal loss by friction; but the law is seen to be nearly the same for variation of load, and its operation confirms the deductions previously drawn from all other work of this character which the writer has been able to offer. In both of the compound engines, however, there is some evidence of a tendency to reduce friction slightly as the power is increased, a change contrary in direction to that detected in other cases; but in neither set of examples is this variation great. (See Figs. 29 and 30.)

TABLE X.

THE JARVIS ENGINE, 7″ × 7″.

Friction with speed and load variable.

No governor. Speed varied by the throttle. Steam pressure constant at 80 lbs. Trial No. 2.

No. of Card.	Rev's of Engine.	M. E. P.		I. H. P.		Total.	Brake, H. P.	Friction, H. P.
		Head.	Crank.	Head.	Crank.			
1	475	6.9	9.7	2.30	2.42	4.72	3.44	1.25
2	475	14.9	16.6	4.95	5.40	10.45	8.55	1.80
3	495	8.9	9.9	3.09	2.94	6.03	5.61	0.42
4	495	23.7	24.4	8.04	7.9	15.94	14.1	1.84
5b	495	29.4	27.4	10.15	6.80	16.95	15.35	1.60
6	817	31.7	29.0	18.09	15.57	33.66	32.60	1.06
7	912	13.5	11.0	8.7	6.6	15.3	13.6	1.7
A	602	11.2	10.4	4.0	4.4	8.4	?	.....
B	602	22.8	24.6	8.1	9.2	17.3	16.8	0.5
C	602	18.0	18.6	7.37	7.39	14.75	?	.....
D	700	16.4	17.0	8.09	7.57	15.67	15.44	0.23
E	874	17.8	18.0	10.61	10.38	20.99	19.85	1.74
F	703	17.5	18.0	8.36	8.35	16.71	14.46	2.25

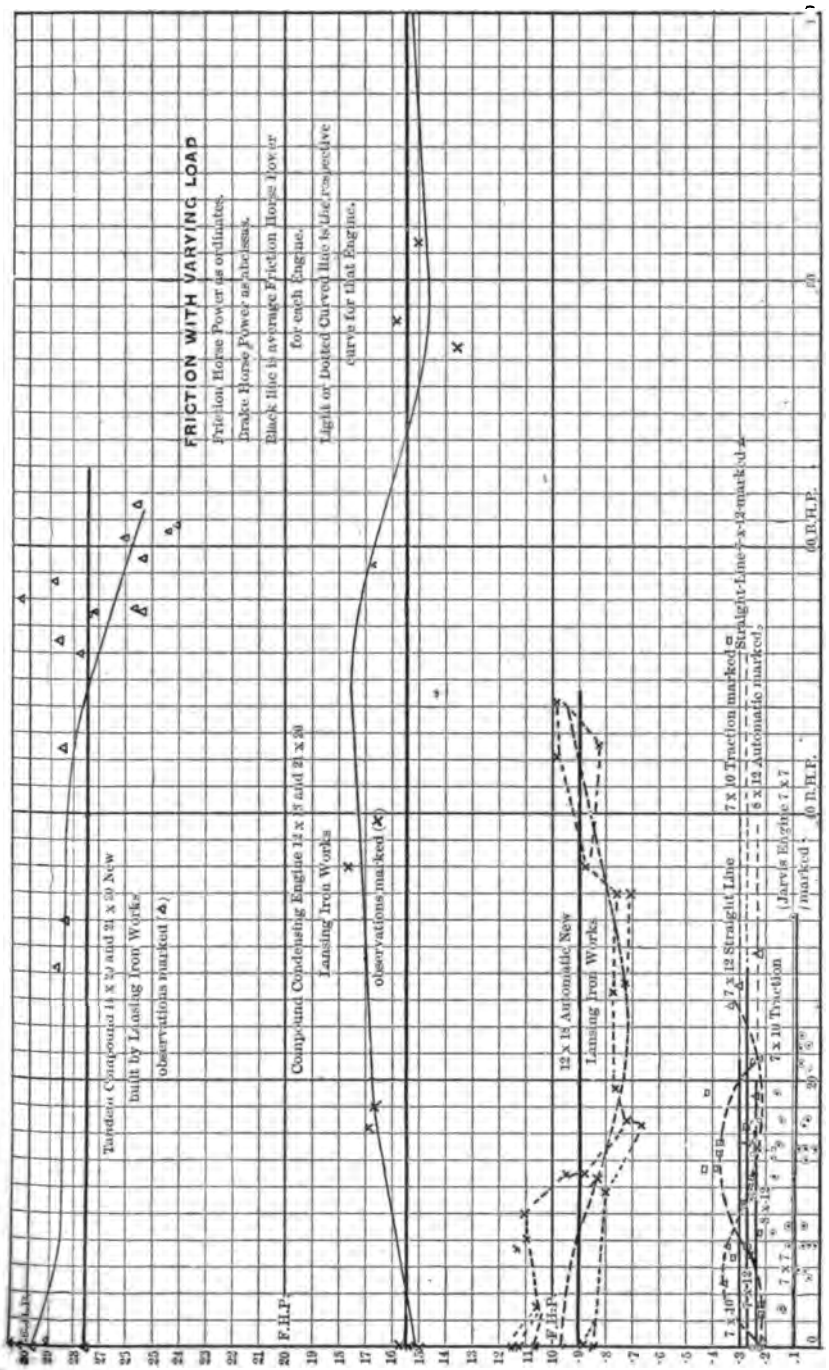
FRICTION WITH VARYING LOAD
Friction Horse Power as ordinates.
Brake Horse Power as abscissas.
Black line is average Friction Horse Power for each Engine.
Light or Dotted Curved line is the respective curve for that Engine.
Tandem Compound 14 x 20 and 21 x 20 New built by Lansing Iron Works observations marked (Δ)
Compound Condensing Engine 12 x 18 and 21 x 20 Lansing Iron Works observations marked (X)
12 x 18 Automatic New Lansing Iron Works
7 x 12 Straight Line
7 x 10 Traction marked
Straight-Line 7 x 12 marked
8 x 12 Automatic marked
7 x 10 Traction
(Jarvis Engine 7 x 7 marked)
F.H.P.
40 B.H.P.
60 B.H.P.

Fig. 24

TABLE XI.

THE JARVIS ENGINE.

Friction with load and speed variable.

Steam Pressure constant.

Trial No. 3.

No. of card.	Rev's of engine.	M. E. P. Head.	M. E. P. Crank.	I. H. P. Head.	I. H. P. Crank.	I. H. P. Total.	Brake H. P.	Frict'n H. P.
1	355	13.3	13.5	3.47	3.16	6.63	5.91	0.72
2	355	13.5	13.5	3.24	3.16	6.40	5.91	0.49
3	427	14.3	14.8	4.15	4.20	8.35	7.79	0.56
4	443	13.5	12.5	4.08	3.67	7.75	7.41	0.34
5	513	11.3	11.3	3.96	3.85	7.81	7.71	0.10
6	483	13.2	13.0	4.94	3.85	8.79	7.76	1.03
7	576	13.5	11.3	5.31	4.17	9.48	9.01	0.47
8	576	14.5	11.2	5.69	4.97	10.66	9.59	1.07
9	576	22.0	22.7	8.62	8.73	17.35	16.38	0.47
10	576	23.5	25.5	9.21	9.69	18.90	17.28	1.62
11	469	22.5	26.5	7.18	8.20	15.38	14.94	0.44
13	481	35.0	34.3	11.18	11.76	22.94	22.74	0.20
14	481	34.2	36 3	12.67	11.89	24.56	23.70	0.86
16	507	33.5	36.0	11.55	12.04	23.59	22.62	0.97
17	507	29.6	31.8	10.63	10.23	20.86	20.25	0.61
18	507	31.0	35.4	10 67	11.82	22.59	21.93	0.66
19	532	6.0	10.2	2.72	3.48	6.20	5.60	0.60
20	527	10.2	11.7	3.64	4.09	7.73	6.65	1.08
21	522	19.2	21.3	6.96	7.42	14.38	14.02	0.36
22	522	21.0	23.4	7.49	8.48	15.97	14.99	0.98

See Fig. 29 on page 163.

TABLE XII.

TEST BY R. C. CARPENTER AND J. B. BERGER, 1887. FRICTION WITH CHANGE OF SPEED.

Straight Line Engine, 6″ × 12″ cut-off at stroke.

Governed by the Throttle.

No. 1.

No. of card.	Rev's per minute.	I. H. P.	Brake, H. P.	Friction, H P.
1	20.5	0.449	0.369	0.080
2	28.0	0.801	0.504	0.297
3	152.0	3.556	2.888	0.768
4	175.0	5.650	3.150	0.968
5	215.0	4.113	3.970	1.680

Tandem Compound Engine
of the
DELTA LUMBER COMPANY
Built by the
LANSING IRON AND ENGINE WORKS

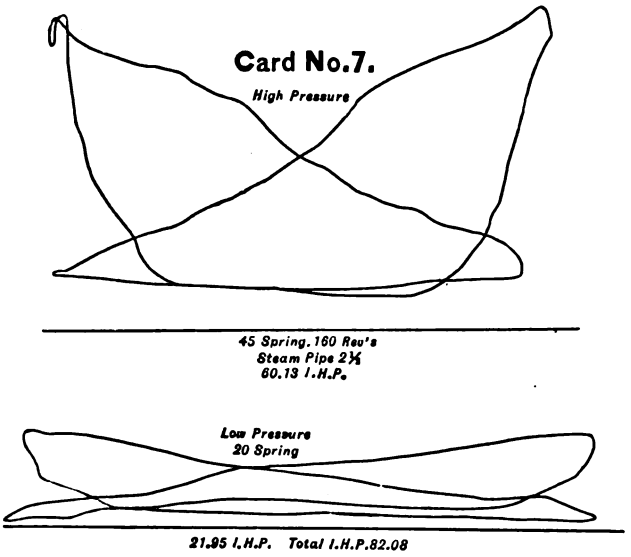

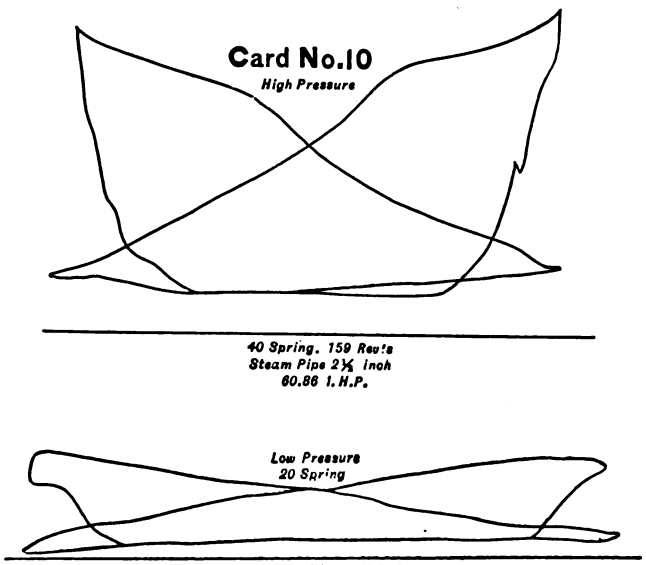

Cards by
R.C.CARPENTER & G.B.PRESTON

FIG. 29.

Tandem Compound Engine
of the
DELTA LUMBER COMPANY
Built by the
LANSING IRON AND ENGINE WORKS

Card No.14

High Pressure

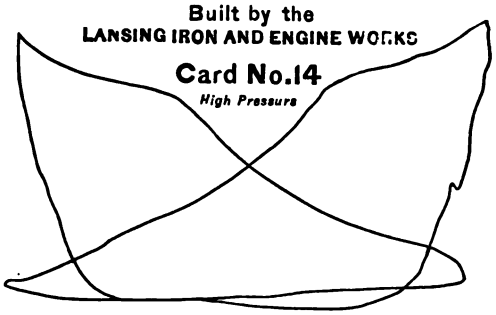

40 spring. 160 Rev's
Steam Pipe 2½ inches,
61.48 I.H.P.

Low Pressure
20 Spring

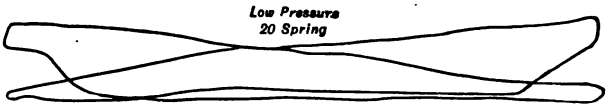

25.29 I.H.P. Total I.H.P. 86.67

Card No.A.

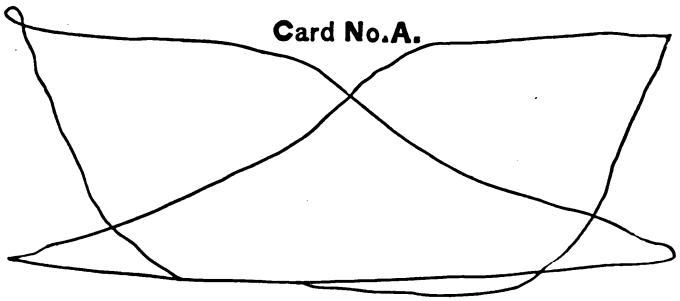

High Pressure Engine doing regular work.
40 spring. 190 Rev's
Steam Pipe 5 in.
76.31 I.H.P.

Low Pressure
20 Spring. 50.79 I.H.P.

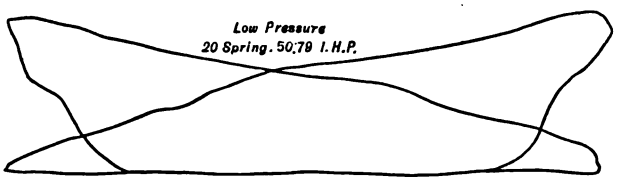

18.67 lbs. per brake H.P.
Total I.H.P. 127.10. Water rate from Card.
Cards by
R.C.CARPENTER & G.B.PRESTON

FIG. 30.

TABLE XIII.

TEST BY R. C. CARPENTER AND J. B. BERGER, 1887. FRICTION WITH CHANGE OF SPEED.

Straight Line Engine, 6″ × 12″.

Trial No. 2.

No. of card.	Revolutions.	I. H. P.	Brake, H. P.	Friction, H. P.
1	127	9.193	8.636	0.557
2	136	9.583	8.500	1.083
4	165	11.244	9.570	1.674
5	165	10.703	9.731	0.968
7	192	12.101	10.944	1.157
8	80	4.982	4.240	0.742
9	48	2.979	2.592	0.387
10	100	6.555	5.600	0.955
11	120	7.647	6.360	1.287
12	130	7.718	6.695	1.023
13	171	9.447	8.208	1.239
14	217	12.238	10.199	2.039
15	219	12.545	11.059	1.486
16	229	11.662	10.534	1.128
17	252	11.836	10.332	1.504
18	241	11.574	9.640	1.934
19	266	11.626	9.709	1.917
20	315	13.621	11.182	2.439

TABLE XIV.

EFFECT OF SPEED ON ENGINE FRICTION.

Straight Line Engine, 6″ x 12″. Trial No. 3, Engine Light.*

Test by R. C. Carpenter and J. B. Berger, 1887.

No. on Card.	Revolutions of Engine.	I. H. P.
A	92	0.32
B	238	1.39
C	245	1.51
D	214	1.23

* For details of last three tests, see Paper CCLXV., Vol. IX., American Society Mechanical Engineers.

TABLE XV.

STRAIGHT LINE ENGINE, $6\frac{7}{8}'' \times 12''$.

Friction with Change of Load.—Day and Riley.

No. of Card.	Revolutions per Minute.	Steam Pressure—Pounds.	Brake, H. P.	I. H. P.	Frictional H. P.	Frictional, H. P. Reduced for Speed of 250 Revolutions.
1	282	19	0.0	2.26	2.26	1.97
2	288	66	4.87	8.43	3.56	3.02
3	286	66	7.61	10.95	3.34	2.87
4	284	65	10.30	12.93	2.93	2.54
5	285	71	13.10	15.99	2.89	2.54
6	284	76	15.30	18.79	2.99	2.63
7	284	74	18.15	20.73	2.58	2.28
8	280	67	21.00	23.73	2.73	2.40
9	279	65	23.61	25.95	2.34	2.07
10	280	75	26.39	29.95	2 36	2.08
11	280	72	29.03	32.22	3.19	2.81

TABLE XVI.

TRIAL BY DAY AND RILEY, 1886.

Straight Line Engine, $6\frac{7}{8}'' \times 12''$.

Friction with varying Steam Pressure.

No. of Card.	Rev.	Steam Pressure.	I. H. P.	Mean F. H. P.	Equivalent I. H. P. for 250 Rev.
1	250	25	6.01	1.07	1.07
2	271	39	6.52	1.65	1.52
3	285	42	7.17	2.31	2.03
4	280	46	7.08	2.26	2.02
5	271	58	6.81	1.88	1.74
6	289	63	7.85	3.03	2.61
7	286	68	7.77	3.13	2.75
8	293	77	7.88	2.44	2.08
9	296	82	7.87	3.14	2.67
10	275	71	2.10	2.13	1.94
11	279	$66\frac{1}{2}$	1.995	2.03	1.81
12	277	44	1.708	1.76	1.56
13	275	35	1.71	1.73	1.57
14	275	30	1.613	1.61	1.46
15	272	25	1.876	1.91	1.75
16	270	19	1.724	1.75	1.62
17	270	15	1.712	1.74	1.61

TABLE XVII.

MITCHEL'S AND ALDRICH'S EXPERIMENTS OF 1884.

Straight Line Engine, 8″ × 14″.

Friction with Change of Load.*

No. of Card.	Boiler Pressure.	Revolutions.	Brake, H. P.	I. H. P.	Frictional H. P.
1	50	332	4.06	7.41	3.35
2	65	229	4.98	7.58	2.60
3	63	230	6.00	10.00	4.00
4	69	230	7.00	10.27	3.27
5	73	230	8.10	11.75	3.65
6	77	230	9.00	12.70	3.70
7	75	230	10.00	14.02	4.02
8	80	230	11.00	14.78	3.78
9	80	230	12.00	15.17	3.17
10	85	230	13.00	15.96	2.96
11	75	230	14.00	16.86	2.86
12	70	230	15.00	17.80	2.80
13	72	231	20.10	22.07	1.97
14	75	230	25.00	28.31	3.31
15	60	229	29.55	33.04	3.40
16	58	229	34.86	37.20	2.34
17	70	229	39.85	43.04	3.19
18	85	230	45.00	47.79	2.78
19	90	230	50.00	52.60	2.60
20	85	230	55.00	57.54	2.54

DISCUSSION.†

Mr. Harris Tabor.—In considering Prof. Thurston's very interesting paper on variable load, friction, and engine speed, one is struck by the irregularities in the results when something like constancy or ratio might be expected.

In the first test cited, Table I., with engine, 8″ × 12″, where change of speed only is considered, the results are what might be expected, viz, uniformity. Here we find a fairly uniform decrease in friction with increase in speed. With the slower speed, where the friction is greatest, the engine was running below the rated speed of the builders. It is fair to assume that the speed was too slow to get the best distribution of crank pin pressures, and we find,

* For details of tests by Day and Riley and Mitchel and Aldrich, see Paper CCVIII., vol. VII., American Society Mechanical Engineers.

† This paper was presented jointly with the Author's other paper entitled "On the Distribution of the Internal Friction of Engines," No. CCCXVI., and was discussed with that of Prof. Denton on the "Friction of Piston Packing Rings," to which the reader is also referred in this Volume.

as the speed increases, a gradual reduction of the friction horse-power. Inertia of reciprocating parts must be a factor in friction on crosshead pin, crank pin, and shaft bearings. Possibly, if the speed had been increased beyond the most efficient distribution of crank pin pressures the ratio of friction would have been reversed, and we should then have an increase of friction corresponding to the decrease shown in the table.

In the case of the 12″ × 18″ automatic engine, it would be interesting to know more of the conditions of the tests. Prof. Thurston states that the engine was new and had not left the shop, which would lead one to expect decreasing friction with each succeeding test, regardless of speeds, and particularly so if test for each speed were continued for any length of time. It would not be remarkable to note a decrease of 50 per cent. in the friction of a new engine after a few hours' run. In fact, unless unusual care had been taken in its construction the absence of decrease would be remarkable. This table shows very uniform frictional resistance, with increasing speed, except in one instance, when the rotation is increased from 180 revolutions, with 8.87 friction HP. to 185 revolutions, with an increase in friction to 10.6 HP. An additional five turns to the engine brings the friction down to 7.55 HP. There are so many causes for such irregularities in the running of new engines that this apparent discrepancy may be ignored, and we may assume that an increase of speed was obtained with a practically constant friction, or that each succeeding test of the engine so improved its bearings that freer running resulted. Here we have three possible conditions, viz.: improvement in bearings, change in lubrications and change in speed, any one of which would affect the results.

Table III., containing result of test made with the Jarvis engine at much higher speeds, shows a remarkable uniformity in increase of frictional resistance with increase in engine speed.

The log of the Straight Line engine, 6″ × 12″, Table IV., showing the effect of the different points of cut-off on frictional resistance, is an interesting study. Here, as in the preceding cases, there may be other influences at work, and they must not be ignored. This excellent engine is so well known that it may seem out of place to call attention to the fact that its compression varies with the point of cut-off, but this has so much bearing on the question that it can do no harm to emphasize this feature.

An examination of the diagrams taken from this engine during

the test would show that when working under the influence of an 1-8 cut-off, the compression would begin near the middle of the stroke, probably much earlier; this in its effect upon the running of the engine, would tend to reduce friction about in proportion to its tendency to produce quiet running. If we follow the range of cut-off and compare the frictional resistance, we find the greatest variation between 1-8 and 1-4 cut-off, and between these points we would also find the greatest difference in compression. From 1-4 to 3-8 and from 3-8 to 1-2 the changes in friction are less; here also we will find correspondingly less change in compression.

There is a gradual increase in the steam pressures, and this fact may be misleading if one does not keep in mind this type of engine. The lowest pressure is when cutting off at 1-8 stroke, but at this point the initial pressure is probably greater than at the later points of cut-off on account of resistance due to the early and high compression. This assumption is supported by the fact that with a falling in steam pressure from 36 lbs. to 33 lbs. there is a corresponding decrease in speed from 253 revolutions to 222 revolutions. With later points of cut-off, the throttle was probably closed to keep the speed of the engine down.

In this case is it not safe to assume that the variable compression, which is so prominent a feature in this engine, is really the influence that determined the variation in friction rather than the change in expansion?

It is generally conceded that liberal and variable compression is a large factor in determining the durability of the high speed engines used in electric lighting. I know this feature has much to do with the quiet running, but I do not know if it has been considered as tending to reduce frictional resistance.

In discussing test for friction with change of load and point of cut-off, Table V., the author says: "Plotting the curve thus obtained, it is at once seen that the friction is decidedly increased with increase of load and decreased in the ratio of expansion."

This test was made with a traction engine with slide valve, and the change of cut-off was probably made by increasing the lap of valve, which would also increase the compression. Here we have a strong argument supporting the theory that compression may and does reduce engine friction.

The tests embodied in Tables X. and XI. are remarkable on account of the high speeds, and the novelty of the engine, each of

which is a revolution. In the early stages of the engine Mr. Jarvis came to the writer with a wooden model which showed the general construction and details. At that time he had his first engine running some months, and seemed very sanguine of good results. The cut and description given by Prof. Thurston indicate that there has been but little change since the early conception. One who has seen the engine can easily believe in its capacity for high speeds and very low frictional resistance. The crosshead is dispensed with and in its place is introduced a sliding abutment through which the piston rod passes on its way to the crank pin. This abutment has a crosswise motion due to the angular changes of the piston rod. During one half the time the sliding abutment works under the steam pressure in the cylinder and the other half under the pressure of the exhaust and compression. The greater part of the piston area lies within the ball which is always perpendicular to the thrust of the piston, thus putting the greater part of the steam effort directly on the crank pin, where we may look for nearly all the result from any change in friction due to change of load and speed. It would seem that we have here conditions which should insure low friction horse-power, and fair uniformity under changes. The lightness of the reciprocating parts of this engine will insist upon a very high rotative speed to get the best effect of crank-pin pressures, hence we may look for a decreasing ratio of friction horse-power with an increase in speed up to the limit which gives the best distribution of crank pressures.

In dealing with these very high speeds one must accept the results with skepticism until the truth is well established. It is difficult to analyze the cards submitted on pages 153 and 154 without a better knowledge of the conditions under which they were taken. There is enough given, however, to form a basis for conjecture and suggestion.

Card No. 2, page 154, which was taken at the slowest speed, 355 revolutions, is the shortest of the series. No. 7 taken at the highest speed, 915 revolutions, is the longest; the difference in length is about 22%. Nos. 3 and 6, 874 and 817 revolutions respectively, are shorter than No. 7. B is shorter than 3 and 6 and was taken at much slower speed, 602 revolutions.

A reference to the numbers of cards given in the table would indicate that they belong to different tests, and they may have been taken with different reducing motions which would account

for the difference in the average length of the two series. This is not probable, however, for one would hardly introduce greater length of card for higher speed.

There is nothing in either Table X. or XI. which corresponds with card 7 in speed; the same number in Table X. gives a speed of 912 revolutions with the same indicated horse-power, brake power and friction; the table reference is probably meant for this card. Evidently No. 3 on page 153 and reference letter E in Table X. are intended to be the same; they agree in data. This will give a series of four cards taken from the same reducing mechanism, and taken under the same conditions, except as to speed and load. Beginning with the highest speed and following down the page we find each succeeding card shorter in about the same ratio as the speed is decreased. If we compare cards 2 and 4 on page 154 with No. 7 on page 153, we find that at the enormous speed of 915 revolutions there is less evidence of wire-drawing than is shown in cards 2 and 4 which were taken at less than one half the speed, viz.: 355 revolutions and 443 revolutions.

The diagrams given on page 154 correspond in data to similar numbers given in Table XI., and were evidently taken at nearly the same time and under similar conditions, except as to speed and load. Here, as on the preceding page, we find the diagrams lengthen as the speed is increased, but to a less extent on account of the much lower average speed.

It may be claimed that change in length has no appreciable effect on the truth of the diagram, and this is true if the motion be positive and the change evenly divided through the stroke, but when such change is due to fling of the paper drum the error is quite apt to distort the compression and may change the point of cut-off. The straight steam line on card No. 7 is probably due to the irregular motion of the paper drum.

As Prof. Thurston says, this question is one of the utmost importance; it is one that should enter as largely into the commercial part of the engine as the coal itself; in fact, its effect is of more importance, for to a great extent the friction of a steam engine has an appreciable effect on its durability.

Mr. C. J. H. Woodbury.—I would call attention to the use of pumps to supply a free quantity of oil for the purpose of flooding heavy bearings. There are two types of such pumps, one being an oscillating pump driven by a small belt, of which the shaft itself

forms the driving pulley, and the other a chain pump, in which the oil is carried on by its adhesion to a string, and withdrawn from the string by a wire which is in contact with it. Free lubrication is essential to obtain the minimum coefficient of friction in any machinery. The filtration of oil does not interfere with its quality, unless the oil is oxidizable at the ordinary temperature; that is, containing a large percentage of animal oil, and I might almost say any vegetable oil whatsoever, but the mineral oils and those of the mixed oils containing a greater portion of mineral oil can be used over and over again. On the piston rod there is frequently unnecessary friction caused by screwing the glands too tightly; that is especially true in regard to steam pumps. I have known instances of steam pumps where the area of the steam cylinders was four times that of the water plungers, being in an inoperative condition solely because the glands were screwed so tightly on the rods as to present a resistance which was too great for even that excessive steam pressure.

Prof. Jas. E. Denton.—The papers presented by Prof. Thurston add to his previous offerings upon the subject of engine friction,

1st. By showing that the phenomenon of practically constant friction under all possible working conditions, holds good for several classes of engine not previously experimented with regarding friction, viz.:

(1.) A 7 × 10 agricultural engine.

(2.) A 12 × 18 automatic engine too new to be worn to the condition of minimum friction.

(3.) A 7 × 7 upright engine capable of attaining the extraordinary speed of 900 revolutions.

(4.) A compound engine with condenser and attachments.

2d. By showing how the total friction of several of these engines, and the previously examined 6 × 12 Straight Line engine, was distributed relatively among the several moving parts of the engine, this being accomplished by driving the engines while not under the action of steam through a Morin dynamometer.

The labor and pains which are shown to have been bestowed upon these investigations is certainly very great, and I wish to express my sincere admiration of the work done, which unquestionably reflects great credit for persistence and zeal upon the investigators.

While the dynamometer determinations are to me very interesting, I cannot find in them information sufficiently differing from pre-

viously available knowledge* regarding the distribution of the total friction, to feel that any new views regarding the theory of lubrication will result from their showing as a whole. Nevertheless, special portions of the dynamometer records appear to be applicable to a further explanation of the *Constant Friction Phenomenon*, which continues to appear as the one invariable fact of the entire research conducted through Prof. Thurston, as well as in all similar tests reported by others. I have characterized this phenomenon in a previous discussion as a paradox, and though the author of the paper seems not to agree to this expression on my part, I still think we lack the necessary understanding of the cause of the non-variation of the friction of engines to regard the matter other than a paradox. If we double the weight of pulley upon a shaft, or tighten a belt to a considerable extent, we almost invariably have unmistakable evidence of an increase in the frictional work at the bearings which receive the extra strain. If we apply a balance plate to a slide valve there is unmistakable evidence of a sensible change of friction corresponding to a change of pressure upon the rubbing surfaces. But if we cause the pressure upon the piston of a steam engine to double or quadruple itself and thereby send a proportionally greater pressure upon the majority of the bearings of the engine, behold there is no sensibly greater amount of power lost in friction as determined by unquestionable measurements with the indicator at one end of the engine and an absorbing dynamometer at the other.

We have testimony to the fact in connection, not only with different styles and proportions of engines, but, by the present paper, with engines in widely different conditions as regards the bearing surfaces. The compound engine here examined, for example, has an abnormally high friction, but notwithstanding this fact the *absolute* friction remains practically at 27 HP., while the work done by the engine varied from 27 to 61 HP. I feel that whatever value this research can have in advancing our knowledge of the true action of lubricants must come from an explanation of this constancy of friction, which is the only stable feature of the record presented in the papers.

All other general deductions appear to me to be delusive, in that they look for a continuous law of change where the only variation is an accidental variation of friction between the fixed

* See Calculation, Table A, page 176.

limits defined by the general influence, which is responsible for the total friction remaining practically constant.

With the object of showing exactly wherein our available knowledge of the laws of lubrication fails to supply the desired explanation of the constancy of friction phenomenon, I append the following argument.

Required to determine from the present known laws of friction, the power absorbed by the internal friction for the following two cases :

Case I.

Engine 6″ diameter, 12″ stroke, 230 revolutions per minute. Weight of main shaft and fly-wheel, 1,500 lbs.—diameter shaft bearings, 3 inches; diameters of crank and wrist-pins, 2 inches. Average mean effective pressure, 30 lbs. per square inch, giving 12 indicated HP. Balanced slide valve having 2 inches travel, piston packing rings, 1 inch wide. Eccentric, 6 inches diameter.

Case II.

Engine 7″ × 10″, 200 revolutions; weight of main shaft and fly-wheel, 500 lbs. Diameter of main shaft, $2\frac{3}{4}$ inches; diameters of crank and wrist-pins, 2 inches; average mean effective pressure, 30 pounds per square inch, giving about 12 HP. Unbalanced valve, 2 inches travel; piston packing ring, 1 inch wide; eccentric, 6 inches diameter.

If it be proposed to calculate the friction of each part of this engine by using some coefficient of friction, and multiplying the latter by different pressures, the question at once arises, Have we a right to expect that friction is proportional or increases with pressure at any of the bearings of an engine in view of the fact that the total friction of the latter does not practically increase with increase of load? In answer, it may be said that all experiments with friction testing machines agree in showing that as long as the rate of feeding oil to a journal is the same the friction increases with the pressure. Hence for any one load on an engine the friction on the different bearings may be expected to be proportional to pressure where the rate of feeding oil is sensibly the same. In verification of this we find in Table VI., of paper CCCXVI., that lightening the weight of fly-wheel of the 7″ × 10″ engine from 320 to 70 pounds causes a sensible reduction of friction. Also in Tables I. and II., relieving the valve of press-

ure always causes a definite reduction of friction. Evidently, therefore, the *separate parts* of an engine are not exceptions to the law that *more load makes more friction.* The next question that arises is, What coefficient of friction is it reasonable to assume for the bearings? In answer, it may be said that for the ordinary engine bearing, which is smoothed by natural wear, unattended with considerable "end play," 10 per cent. is an entirely reasonable figure for a continuous but restricted supply of lubricant. The idea is somewhat prevalent that modern experiments with oil-testing machines have demonstrated that a journal wears *itself* if run for a long time without mishap, to such a condition that a coefficient of friction, of a fraction of one per cent. is finally representative of its running condition.

As a matter of fact the journals which have given coefficients of friction equal to a fraction of one per cent. have been nursed by long running under a flood of oil to an exceptional state of smoothness, attainable only by maintaining a constant "end play" motion of considerable amplitude. If such journals are supplied with a restricted amount of oil and the "end play" motion is suspended, the coefficients of friction jump immediately from a fraction of one per cent. to 3 or 4 per cent. On the other hand, whenever experiments on oil-testing machines have been made with journals or bearings not sufficiently smoothed and with a restricted "feed," the coefficients of friction with the majority of lubricants run from 5 to 20 per cent., as for instance, in the oil experiments of Woodbury and Webber, and in the case of the experiments given in Thurston's Treatise on Lubricants, as made with a cast iron journal and a fixed dose of oil. In the case of the lubrication of car journals there is a natural realization of the very low coefficients, because the "feed" is superabundant, and there is an "end play" motion which gives to the journal and brass a highly polished surface, practically unattainable on an engine bearing having no "end play." Writers on lubrication for a number of years past have apparently assumed that the coefficients of friction of car service were attainable on all journals, and amongst other results of this error has been a general condemnation of the coefficients of friction given by the eminent scientist of the past century, General Morin, whose work from a practical standpoint is still worthy of all respect.* Further confirmation of this line of thought is afforded by Prof. Thur-

* See Table D, page 181.

ston's values of the coefficients of friction, column 5 of Table X. of the paper, which run from 9 to 30 per cent.* for the main shaft bearings.

We proceed to make our calculations with an assumed coefficient of friction of 10% for outside bearings. For the piston friction we will assume a coefficient of 2% as a figure that should not be exceeded with fair lubrication, according to results of the experiments presented in my own paper.

For the valve friction we will use the results given in Mr. Gidding's paper, Volume VII. of the Transactions, in which it is shown that the force to drive a balanced valve for such an engine as our Case I. is about 75 lbs. and for Case II. about six times 75 lbs. For example, for the 6 × 12 engine the dead weight is 1,500 lbs., and the crank thrust about 850 lbs. Hence the resultant pressure on shaft bearings is $\sqrt{(1500)^2 + (850)^2} = 1{,}700$ lbs., instead of 2,400 as used in obtaining column 6. There is, therefore, no good reason for expecting the true figure for column 6 to fall below the value in column 5.

TABLE A.

	Case I.—6 × 12 Engine.	Fric H.P.	Case II.—7 × 10 Engine.
Main Shaft..	$\frac{230}{33{,}000} \times \frac{\pi 3}{12} \times \frac{1}{10} \times \sqrt{\left[30 \times \frac{\pi(6)}{4}\right]^2 + \left[1500\right]^2} =$	0.93	$\frac{200}{33{,}000} \times \frac{\pi 2.8}{12} \times \frac{1}{10} \sqrt{\left[30 \times \frac{\pi}{4}(7)^2\right]^2 + (500)^2} =$
Crank Pin ..	$\frac{230}{33{,}000} \times \frac{\pi \times 2}{12} \times \frac{1}{10} \times 30 \times \frac{\pi}{4} \times (6)^2 =$	0.30	$\frac{200}{33{,}000} + \frac{\pi.2}{12} \times \frac{1}{10} \times 30 \times \frac{\pi}{4}(7)^2 =$
Wrist Pin (*a*)	$\frac{230}{33{,}000} \times \frac{\pi \times 2}{12 \times 5} \times \frac{1}{10} \times 30 \times \frac{\pi}{4} \times (6)^2 =$	0.06	$\frac{200}{33{,}000} \times \frac{\pi 2}{12.5} \times \frac{1}{10} \times 30 \times \frac{\pi}{4}(7)^2 =$
Slide (*b*)....	$\frac{230}{33{,}000} \times \frac{2 \times 12}{12} \times \frac{1}{10} \times \frac{30}{10} \times \frac{\pi}{4} \times (6)^2 =$	0.13	$\frac{200}{33{,}000} \times \frac{2 \times 10}{12} \times \frac{1}{10} \times \frac{30}{10} \times \frac{\pi}{4}(7)^2 =$
Valve (*c*)....	$\frac{230}{33{,}000} \times 75 \times \frac{2 \times 2}{12} =$	0.17	$\frac{200}{33{,}000} \times 4 \times 75 \times \frac{2 \times 2}{12} =$
Eccentrics...	$\frac{230}{33{,}000} \times 75 \times \frac{\pi \times 6}{12} \times \frac{1}{10} =$	0.08	$\frac{200}{33{,}000} \times 4 \times 75 \times \frac{\pi \times 6}{12} \times \frac{1}{10} =$
Piston (*d*)...	$\frac{230}{33{,}000} \times \pi \times 6 \times 30 \times .02 \times \frac{2 \times 12}{12}$	0.16	$\frac{200}{33{,}000} \times \pi \times 7 \times 30 \times 0.02 \times \frac{2 \times 10}{12}$
			Add for stuffing box and second eccentric.
	Metallic stuffing box.	1.83	

(*a*). The arc of vibration of the connecting rod is assumed equal to 15.36°.
(*b*). The mean component of pressure upon slides is assumed equal to $\frac{1}{10}$ × piston press
(*c*). Valve travel per revolution = 2 × 2 inches.
(*d*) A pressure of 30 pounds per square inch is assumed to act underneath ring.

* In calculating column 6 of Table X. it appears to have been assumed that the product of a mean effective pressure of about 30 lbs per square inch, times the piston area, might be added to the weight of fly-wheel and the sum considered as the pressure producing the friction in the second column. This process involves a considerable error: First, because the true load is nearly the square root of the sum of the squares of the separate loads; and second, because the friction due the crank thrust should be added to the figure in the second column.

Comparing these results with those given in the paper presented by Prof. Thurston, we have:

	Case I.—6 × 12 Engine.		Case II.—7 × 10 Engine.	
	Thurston.	Calculation.	Thurston.	Calculation.
Main Journals	0.849	0.93	0.68	0.57
Crank Pin and Wrist Pin and Cross Head Slide	0.221	0.49	0.255	0.58
Eccentrics	0.095	0.08	0.165	0.43
Valve	0.046	0.17	0.41	0.68
Piston and Rod	0.593	0.16	0.40	0.13 + 0.2
Total by Summation	1.084	1.83	1.910	2.64
Total by Experiment	1.75	...	2.89	.

It is seen that the main difference of results for Case I. is for the crank pin and piston. As my own figure for piston friction is for continuous and practical lubrication, while the piston in the other case has neither oil nor steam to lubricate it, I believe the figure given by calculation to be more correct. Also, it is probable that the experimental figure for crank friction is too small, and hence the totals balance very nearly, and both practically agree with the engine tested with 12 HP. of actual load. The experimental figure for valve friction is, of course, entitled to more confidence than the calculated figure deduced from another engine, as tested by Mr. Gidding's valve dynamometer.

For Case II. the same remarks apply regarding piston friction, and we have the same discrepancy regarding absence of effect of load on the crank pin and eccentrics, the latter being measured with the valve removed, and hence none of the thrust of the latter being accounted for. The calculated total is therefore more nearly in agreement with the experimental total as given for 12 HP. of work in Table V., in the one-half cut-off group in the first paper presented by Prof. Thurston. On the whole, therefore, it appears that the calculated values represent the friction consistently, and we will now proceed to discuss them with a view to explain the possible constancy of the total friction.

We will proceed to calculate the change of friction by existing knowledge of the laws of lubrication for the conditions of double the above load or 24 HP. and for zero load, or when run empty with full steam acting on valve but not on piston. We will first suppose the coefficient of friction to remain 10 per cent. for outside bearings for both these new conditions. The result is as follows:

TABLE B.

	Friction 6 × 12.			Friction 7 × 10.		
	12 HP.	24 HP.	Zero Load.	12 HP.	24 HP.	Zero Load.
Main Shaft	0.93	1.10	0.84	0.57	1.08	0.26
Crank Pin	.30	0.60	.075	.38	0.76	.09
Wrist Pin	.06	.12	.015	.08	.16	.02
Slide	.13	.26	032	.12	.24	.03
Valve	.17	.17	.17	.68	.68	.68
Eccentrics	.08	.08	.08	.48	.48	.48
Piston and Rod	.16	.32	.04	.13 + .2	.26 + .2	.03 + .2
	1.83	2.65	1.252	2.64	3.86	1.79

It will be noticed that the main shaft friction changes very little for the 6 × 12 engine, but considerably for the 7 × 10. This is due to the great difference between the relation of dead weight to crank thrust in the two engines. The 6 × 12 engine has 1,500 lbs. dead weight, or 1.9 times the crank thrust for 30 lbs. mean effective pressure. Consequently when the mean effective pressure is doubled to give 24 HP. the number under the square root sign, Table A, only increases to 1.2 times its value for 12 HP. Similarly for zero HP., the mean effective pressure being taken at one-fourth * of 30 lbs., the square root value only falls to 0.9 of its value for 12 HP. But in the 7 × 10 engine the dead load—500 lbs.—is only about 0.4 of the mean crank thrust, hence the latter is the controlling influence in fixing the value of the square root term in Table A; so that the values for 24 HP. and zero load differ considerably from the 12 HP. values.

The totals for friction in Table B, even as they stand, are not outside of the limits of the total friction reported for these engines in Prof. Thurston's first paper, but are they correct according to the laws of friction as now known? The friction of the valve and eccentrics is essentially correct, as there is no reason to suppose their condition essentially changed with variation of load.

Experiments with the apparatus described in the writer's paper,

* When either of these engines is run empty or without other load than itself, the pressure upon the crank pin will at least be greater than one-fourth the force necessary to accelerate the reciprocating parts, minus the piston-rod friction. The accelerating force, taking the weight of reciprocating parts at 50 lbs., is about 20 lbs. per square inch, and the friction of piston is not as great as one pound per square inch. I therefore take the mean effective pressure empty at one-fourth of 30 lbs.

presented at this meeting, indicate that the steam used in an engine assists the cylinder oil to reduce friction, and that the more steam used per stroke the less the friction per pound of mean effective pressure. Several practical instances of valve friction also confirm this idea.

The true piston friction, therefore, for the 24 HP. and zero load conditions, probably differs less from the 12 HP. figure than is shown in Table B.

The several outside bearings of the engines sustain pressures of about the following intensities:

TABLE C.

	6″ × 12″ Engine.			7″ × 10″ Engine.		
	12 HP.	24 HP.	Zero Load.	12 HP.	24 HP.	Zero Load.
Main Shaft....	50 lbs. per sq. in.	60	45	40	75	20
Crank Pin.....	160	320	40	200	400	10
Wrist Pin....	160	320	40	200	400	10
Slides.....	5	10	13	8	15	2
Eccentric.....	8	8	8	32	32	32

By the modern theory of lubrication as announced by the deductions of Prof. Thurston and Mr. Woodbury, the frictional resistance of a journal is to be conceived as made up of the sum of two parts, viz.: a part representing the friction due to metallic contact of infinitesimal irregularities of the bearings, and a part representing the force to overcome the viscosity or fluid friction of the lubricant. It is conceded that the first part obeys the law of Morin, or that it doubles when the pressure doubles, but it is held that the second part does not increase with the pressure, or only does so very slowly. Hence the total friction observed in any given case should, as the journal pressure increases, give a decreasing value for the ratio of friction to pressure or a decreasing coefficient of friction.

Woodbury's experiments clearly warrant this conclusion, but they are confined to very light pressures per square inch—less than 50 pounds—and a surplus amount of oil was used. Thurston's experiments show that for cast-iron journal in ordinary condition, oil feed intermittent, if the coefficient of friction for 8 lbs. pressure per square inch is unity,

Then for 16 lbs. the coefficient is $\frac{3}{4}$
" 32 " " " $\frac{1}{2}$
" 48 " " " $\frac{1}{2}$

These results would warrant the use of a coefficient of 15% for the main shaft friction of the 7 × 10 engine under zero load, but do not modify any other figure.

Thurston also gives us experiments on a series of oils at pressures of 50, 100, and 200 pounds per square inch which verify the decreasing coefficient theory by showing that if the coefficient for 50 lbs. is unity, the coefficient for 100 lbs. is $\frac{6}{10}$ and the coefficient for 200 lbs. is .35.

If these ratios were applicable to the problem under notice we should be able to argue from them that the change of coefficient of friction due to the variation of intensity of crank pin pressure at 12, 24, and zero HP. would make the friction of this member of the engine practically the same at these three loads. But these ratios were found by testing oils on a journal kept constantly flooded with oil, so that practically no friction from metallic contact occurred, the viscosity element predominating. Whereas in a practical engine bearing with a restricted feed, such would not be the case. It is for the latter set of conditions that Morin states his law that "friction is proportional to pressure" with all ordinary unguents, and that the friction is independent of the speed.

He gives us to understand that his experiments incorporated practical conditions of feeding, while all modern experiments have sought to eliminate the effect of the rate of feeding by using a surplus amount of lubricant. In view of these facts, I have made a special set of experiments to determine if the coefficient of friction decreased with a restricted feed of oil. The method of feeding was by the ordinary glass oil cup, having a stem or needle which could be screwed down into the feeding orifice so as to procure any desired rate of feed.

It is usual to regulate the feed of such cups for shafting and engine bearings so that no oil will flow from the cup by gravity, but so tha a slight suction, such as is created by the velocity of rotation of the journal, will cause oil to issue. This method was therefore adopted. The cup was screwed into the upper brass of a small Thurston oil tester, which was fitted with a soft steel journal and brass bearings in good running condition, but not in the artificially perfect condition to which the bearings were reduced in the experiments of Thurston, which gave the decreasing coefficients quoted above. The temperature of the journal was maintained between 100° and 105° by an air jet which played against the bearings.

The following results were obtained with sperm oil, and apply for all oils of about the same fluidity:

TABLE D.

Pressures.		Coefficients of Friction.	
Per square inch.	Total.	At 300 Revolutions.	At 900 Revolutions.
40	88	0.050	0.047
65	136	.055	0.050
115	236	.0545	.0545
215	436	.0605	.063

There is evidently nothing in these results upon which to support the decreasing coefficient theory nor to contradict Morin's law.

Accordingly, I am unable to see any ground for a modification of the coefficient of friction used in Table B on account of the variation of bearing pressure shown in Table C, except the main shaft friction of the 7″ × 10″ engine for zero load. Making this modification, and taking the piston friction constant, we should have results as follows:

TABLE E.

	12 HP.	24 HP.	Zero Load.
Total friction, 6″ × 12″	1.83 HP.	2.41 HP.	1.37 HP.
" " 7″ × 10″	2.64	3.76	2.12

These results are within the limits of the range of values obtained by the experiments reported in Prof. Thurston's papers. But inasmuch as they are founded upon the law that the friction should always be less with a smaller load than with a greater one, it seems to me inconsistent not to still seek some explanation of the fact that some of the engines reported unquestionably showed a considerably greater friction when unloaded than when loaded. For example, the 12 × 18 engine in Table VII. of the present paper of Prof. Thurston shows 11 HP. of friction unloaded and averages 8 HP. for an indicated load of from 40 to 58 HP. Also the Westinghouse engine reported by the writer at the Philadelphia meeting gave 7 HP. friction for 71 indicated HP. of load and 10 HP. friction for no load but itself.

I proposed in my remarks at the present meeting that we adopt the hypothesis that such cases as these were brought about through

the reduction of the friction of the principal bearings, as the load was increased, by an increase in the rate of oil supply caused by the more vigorous agitation or knocking about of the crank pin and main shaft in their bearings. I held that such agitation pumped the oil out of oil cups by creating a more active suction. Since the meeting I have made some special experiments to test this hypothesis, and I find that reduced friction does not result from an increased supply of oil where the feed is restricted to such an extent as would make my hypothesis tenable. But I find that vigorous agitation or jerking of a bearing causes a considerable reduction of friction without any change in the quantity of lubricant present upon the bearing surfaces.

I therefore adopt this latter hypothesis, and think it quite probable that it can explain the reduction of friction, with increase of load, since we see by the results in Table E that, even allowing Morin's laws to apply, only a small reduction in the coefficient of friction is required to change the relative order of the values for friction for the three horse-powers, so as to make the greater power give the least friction, allowance being made for the accidental variation of friction being in opposite direction in consecutive tests.

Mr. Geo. Schuhmann.—I would like to ask Prof. Thurston how the friction of the valve and of the eccentric was determined separately. It appears to me that disconnecting the valve from the eccentric leaves the latter without its load, and consequently there must be less friction of the eccentric strap than when the load is on. To simply run the valve under boiler pressure, with no expansion taking place in the cylinder after the valve has cut off steam (I presume the piston was blocked while engine was run with belt), certainly does not give the exact amount of power required to drive an unbalanced valve when the engine is working under ordinary conditions. I still believe that the only exact way to determine the power required to drive a valve is the plan suggested by me during the discussion of Mr. Giddings' paper on "Valve Dynamometer," Vol. VII., page 642.

Prof. Denton.—I would like to add another point. The engine tested by Prof. Thurston is a link engine; those indicator cards exhibited in the paper are taken at very short cut-off. My experiments with the apparatus described in my paper on the friction of piston packing rings have brought out the fact that even when a considerable tension is upon the piston ring to force it out

against the bore of the cylinder, when full steam is let in on the inside of the cylinder, the friction goes to zero instantly. It is due to the water that is in that steam when it is freshly let in. While the steam is being admitted, the water being in large quantities, is superior to any oil. Furthermore, when the engine is run at full stroke, and the speed of the piston is increased over a range of from 35 to 150 revolutions a minute, we do not have to change the feed of oil at all for 150 revolutions from what we find sufficient at 36 revolutions, showing that the large quantity of steam filling the cylinder at three-fourths cut-off affords a lubrication additional to the oil.

Mr. W. F. Mattes.—I do not wish to challenge Prof. Denton's oil-pump theory, in reference to this apparent paradox, beyond pointing out that its application must be confined to bearings working under reasonable pressures. In practice, as loads are increased, we frequently reach a point where the journals begin to heat. It is very probable, however, that in many such cases the increased rate of lubrication may still prevail, while the effect is neutralized by distortion of the bearing surfaces. I have been convinced, by my own observation, that actual distortion frequently occurs where it has not been suspected, and that the bearing surfaces, upon which our calculations have been based, are thereby sensibly reduced.

Mr. W. E. Crane.—As to Prof. Denton saying that water in steam was a lubricant, I knew of an engine thirty inches diameter of cylinder and five foot stroke, which was supplied with steam through a long pipe ten inches in diameter. This pipe was left uncovered for some three or four weeks. During that time it was impossible to keep the cylinder oiled so that the valves would work smoothly. After the pipe was covered it ran without any trouble, with a quart of oil per day, until it became necessary to change the pipe, and this pipe was also uncovered for some little length of time, and we had the same trouble with keeping the cylinder lubricated. After the pipe was covered there was no further trouble. Of course, when the pipe was uncovered there was greater condensation and a greater amount of water with the steam. In case where a cylinder will work with less oil when the steam follows long than where it is cut off short, if it were not for cylinder re-evaporation there would not be that difference.

It has also been remarked in the discussion on piston packing rings that the steam surfaces would work without oil. It is true

that engines have been run for years without oil in the cylinder Perhaps a homely illustration will show what oil will do on steam surfaces.

Our old locomotives were built with a slide valve for a throttle, and there was also a cup put in top of dome, with a pipe from the same leading into the steam pipe, and it was the fireman's duty before building a fire to put some oil in this cup which went down on the throttle.

A certain engineer had an engine assigned him, but not knowing whether the oil would go into the steam pipe or boiler, would not allow the fireman to put in any oil through fear of causing the boiler to foam. The fireman having all the switching to do was anxious that the throttle should work easier, so one morning he poured a small amount of oil into the prohibited cup. The ease with which the throttle worked satisfied him where the oil went, but he did not say anything. It was also his duty to make up the train, and the engineer had nothing to do till it was time to start.

The conductor gave the signal and the engineer got his foot braced in his old way, took hold of the throttle with both hands; the resistance due to friction having been removed, the throttle lever straightened out and he went over into the tender.

Prof. Thurston.—Two interesting points have come up in the course of this discussion, but I think I can say all that seems to be necessary in a very few words. In regard to the device presented by Prof. Denton for measuring packing-ring friction, which is the first point under discussion, I have been very much interested in it. It strikes me as a very ingenious thing, and likely to be very useful. I should think the results would probably give us some facts and some figures which would be of great value. It is one of the prettiest things I have seen in a long time, and I think the results reported to-night are exceedingly interesting.

In regard to the pumping action to which reference was made during this discussion, and at an earlier one, I should think very likely, under the stated conditions, that it would take place and affect the action of the engine. I should think where the friction is found to be less with heavy loads than light that that action may be at the bottom of the "paradoxical" behavior, but it rarely occurs in the cases that I have investigated that the friction had fallen with increase of load. If we could detect any difference it was a little greater. I have usually attributed the observable dif-

ference to differences in the general lubrication of the machine. My own experience has been similar to that of others taking part in the discussion—that it is next to impossible to lubricate an engine in such manner that the lubrication shall be equally effective for any ten seconds successively; and I have supposed that the irregularities cropping out in this whole series of experiments have been largely due to difference in lubrication at various times. If you read the report of the experiments of Beauchamp Tower I think you will see that the rate of speed of an engine, under various conditions, does considerably affect the efficiency of lubrication. Where a bearing is loose I have no doubt there is that pumping action which is described, and I have no doubt that at times it is very effective. I would not at all dispute the hypothesis.

I was asked how we distinguished between the friction of the valves and the friction of the eccentrics and strap. That is very easily done by driving the engine, as we are accustomed to do, by means of extraneous power through a transmitting dynamometer, observing the amount of friction when the valve and its connections were complete; then disconnecting the valve from the stem and running all the rest. Then by throwing off the stem we get the friction of the strap. By throwing that off we get approximately the friction of the engine dismantled of its valve gear. It was suggested that no law was discovered, so far as could be observed in this case. I am not at all sure that it can be. I have never supposed that a law, in a scientific sense, could be found. What we were trying to find was, not the law exactly, but the facts; and we have actually solved the problem which presented itself originally. The question being whether the assumption made by those who have written on the theory of the engine that the added friction varied directly as the load, was right; that question has been very well settled. The irregularity of the results found in these cases, and probably in all cases of investigation, is not surprising, and was fully anticipated. It is not of the slightest consequence, in view of the nature of the work. We have got the line of our stroke of lightning and we find that it is a line of pretty definite path. The variation is not great and is not of the kind that was anticipated by the old authorities. The final result then showed that the practice of engineers has been correct, and that the theories of the text-books have not been practically correct. We were right in assuming the resistance to be about constant at all times.

A remark was made about the distortion of the bearings, and it was said that that would sometimes account for the irregularities of the results—I have no doubt of that. I had charge, on my watch, of the machinery of the old iron-clad "Dictator" for about a year, once. There we had a main journal twenty-one inches in diameter and originally twenty-six inches long. I remember my first remark on looking over the machinery was that that seemed a pretty short journal for the kind of work to be done. We went to sea with that engine, and at the end of the first trip we were compelled to file up our journal and reset our brasses; and we found we had cut down the journal about a quarter of an inch in the run from New York to Fortress Monroe. We lengthened out the journal to thirty-two inches, and made another trial with very similar results. Finally, we put in a spring bearing back of the main crank shaft—a bearing two feet long—giving us a total length of between fifty-five and sixty inches. Still the engine gave us a great deal of trouble. The reason of that, I have no doubt, was that the shaft had more work on it than it could do without springing; and if we had made it half a mile long it would have still had the heaviest load at the point nearest the crank pin. It always did heat, and probably always would, unless we had so flooded that journal with oil that the shaft could never break through the oil. That was an experiment of the greatest value to me, and I have since always been careful to see that my journals have ample diameter as well as ample length, and especially in critical cases to see that the shaft was supported on both sides of the crank, instead of only on one, as in that case. I believe I have met all the points which have been brought up this evening.

I want to add also that the suggested differences in frictional packings, which was brought up in discussion of the paper on piston packing rings, has no bearing at all upon the results attained in these investigations. The same engine always has the same ring and keeps on using that ring, and, of course, differences of rings have nothing to do with the variation in methods of friction.

CCCXVIII.

SOME TESTS OF THE STRENGTH OF CAST IRON MADE IN THE LABORATORY OF APPLIED MECHANICS OF THE MASSACHUSETTS INSTITUTE OF TECHNOLOGY.

BY GAETANO LANZA.

(Member of the Society.)

WITH HEYWOOD COCHRAN, JOHN K. BURGESS, MAURICE A. VIELÉ, HENRY F. EASTMAN, AND WM. H. GERRISH.

THE object of this paper is to give a brief account of several sets of tests upon the strength and other resisting properties of cast iron, carried on in the laboratory of Applied Mechanics of the Massachusetts Institute of Technology, of which the results are, it is believed, of sufficient practical value to render them worthy of record.

The experiments referred to have formed the subjects of three graduating theses, viz.:

1st. An investigation upon the modulus of elasticity and some other properties of cast iron, by Heywood Cochran of the class of 1885.

2d. An investigation of the tensile and the transverse strengths of cast iron, and a comparison of their respective moduli of elasticity, by John K. Burgess and Maurice A. Vielé, of the class of 1886.

3d. Experiments upon pulleys, keys and set screws, by Henry F. Eastman and William H. Gerrish, of the class of 1888.

The first portion of the work relates especially to the modulus of elasticity, and the limit of elasticity of common cast iron, and of gun iron, both planed and unplaned.

The main portion of the experiments, however, are upon the transverse strength of cast iron when used in the forms of window lintels and of pulleys.

The reason for undertaking these tests was, that it is well known that the modulus of rupture of cast iron varies greatly, according to the form of the casting, and the manner of using it; and it was

considered desirable to obtain some experimental results which should be applicable to the forms mentioned.

Some experiments were also made upon the strength of keys of cast iron, wrought iron, and steel, and upon the holding power of set screws, all of which are recorded here.

SUMMARY OF THE FIRST SET OF EXPERIMENTS—BY MR. HEYWOOD COCHRAN.

The object of the thesis was to determine the values of the modulus of elasticity, and of the limit of elasticity of certain kinds of common cast iron, and of gun iron, and the effect of re-testing the specimens.

The common iron consisted of a half-and-half mixture of Lake Superior magnetic and Harrington irons, the last being made from an English bog ore.

The gun iron consisted of a half-and-half mixture of Muirkirk, Md., and remelted Salisbury irons.

The chemical analyses as far as determined were as follows:

	Gun Iron.	Common Iron.
	%	%
Total carbon	3.51	—
Graphite	2.80	—
Sulphur	0.133	0.173
Phosphorus	0.155	0.413
Silicon	1.140	1.89

The test specimens, all of which were cast at the South Boston Iron Foundry, were twenty-six inches long and square in section; those tested with the skin on being very nearly one inch square, and those tested with the skin removed being cast nearly one and one-quarter inches square, and afterwards planed down to one inch square.

All were of the same section throughout their entire length.

The tables of tests will now be given:

TEST NO. 1.

UNPLANED COMMON IRON.

Gauged length, 13".3125.

Area of section, 1.0455 sq. in.

Loads Applied.	Elongations, Inches.	Sets, Inches.	E.
500	0.0000		
1,000	0.0004		18,148,370
1,500	0.0008		16,977,500
2 000	0.0012		16,608,450
500		0.0000	
2,500	0.0017		15,433,500
3,000	0.0023		14,148,000
3,500	0.0028		13,890,720
500		0.0002	
4,000	0.0032		13,926,800
4,500	0.0036		14,148,000
5,000	0.0042		13,807,000
500		0.0004	
5,500	0.0048		13,344,800
500		0.0004	
6,000	0.0052		13,533,540
500		0.0004	
6,500	0.0057		13,521,900
6,500	0.0056		
500		0.0004	
7,000	0.0061		13,568,140
500		0.0006	
7,500	0.0066		13,504,800
500		0.0008	

Tensile strength, 23,000 lbs. per sq. in.

With a load of 11,000 lbs. the piece broke unexpectedly in the upper clamps, due to the fact that these clamps did not bind the piece as they should have done, but rather pinched it at its lower end. Then, too, the load was very suddenly applied. Upon re-testing, the piece broke with a load of 24,000 lbs., or 23,000 lbs. per square inch. A load of 6,500 lbs. was left on for seventeen hours and a half without producing any additional elongation. The position of the fracture was just outside the upper clamps.

TEST NO. 2.

UNPLANED COMMON IRON.

Gauged length, 13".5938.
Area of section, 1.0754 sq. in.

Loads Applied.	Elongation, Inches.	Sets, Inches.	E.
500	0.0000		
1,000	0.0004		18,058,140
1,500	0.0007		18,058,140
2,000	0.0011		17,237,310
2,500	0.0015		16,854,260
3,000	0.0020		16,206,000
3,500	0.0025		15,168,840
4,000	0.0030		14,997,430
4,500	0.0034		15,093,361
5,000	0.0039		14,585,430
500		0.0000	
5,500	0.0046		13,739,900
6,000	0.0050		13,904,800
6,500	0.0057		13,306,000
500		0.0003	
7,000	0.0063		13,146,330
7,500	0.0069		12,917,500
500		0.0005	
8,000	0.0075		12,640,700
500		0.0006	
8,500	0.0082		12,408,040
500		0.0005	
9,000	0.0095		
500		0.0009	

Tensile strength, 23,000 lbs. per sq. in.

TEST NO. 3.

UNPLANED COMMON IRON.

Gauged length, 13".4883.
Area of section, 1.0614 sq. in.

Loads Applied.	Elongation, Inches.	Sets, Inches.	E.
500	0.0000		
1,000	0.0004		18,154,300
1,500	0.0008		16,398,300
2,000	0.0012		15,561,000
2,500	0.0017		14,950,600
3,000	0.0022		14,607,000
3,500	0.0026		14,523,460
4,000	0.0031		14,347,800
4,500	0.0037		13,926,600
5,000	0.0042		13,615,800
500		0.0001	
5,500	0.0050		12,771,900

At the end of the test a load of 9,000 lbs. was left upon the piece for seventy hours.

TEST NO. 4.

SAME SPECIMEN RE-TESTED.

Loads Applied.	Elongation, Inches.	Sets, Inches.	E.
500	0.0000		
1,000	0.0003		19,550,800
1,500	0.0007		18,154,300
2,000	0.0011		17,732,140
2,500	0.0015		17,528,300
3,000	0.0019		16,721,100
3,500	0.0023		16,575,700
4,000	0.0029		15,606,350
4,500	0.0035		14,734,000
5,000	0.0040		14,386,450
5,500	0.0048		13,237,530
500		0.0002	
6,000	0.0052		13,376,850
6,500	0.0058		13,146,240
500		0.0002	
7,000	0.0062		13,322,900
7,500	0.0066		13,478,200
500		0.0001	
8,000	0.0071		13,414,000
8,500	0.0076		13,376,900
500		0.0001	
9,000	0.0081		13,335,600
9,500	0.0086		13,299,100
500		0.0001	
10,000	0.0093		13,021,470
500		0.0002	
10,500	0.0100		12,771,900
500		0.0003	

The load of 5,500 lbs. was left upon the piece for two hours. At the end of this test a load of 12,000 lbs. was left upon the piece, this being above the limit of elasticity.

TEST NO. 5.

SAME PIECE RE-TESTED A SECOND TIME.

Loads Applied.	Elongation, Inches.	Sets, Inches.	E.
500	0.0000		
1,000	0.0004		14,950,630
1,500	0.0009		14,950,630
2,000	0.0013		14,950,630
2,500	0.0017		14,734,000
3,000	0.0022		14,606,900
3,500	0.0027		14,386,450
4,000	0.0032		14,120,030
4,500	0.0037		13,926,640
5,000	0.0042		13,779,800
5,500	0.0047		13,664,540
6,000	0.0052		13,571,700
6,500	0.0057		13,376,900
7,000	0.0062		13,322,900
7,500	0.0067		13,227,670
8,000	0.0073		13,146,230
8,500	0.0078		12,992,535
9,000	0.0084		12,859,320
9,500	0.0090		12,708,000
10,000	0.0095		12,708,000
10,500	0.0101		12,613,430
11,000	0.0107		12,499,700
500		0.0003	
11,500	0.0111		12,593,540
12,000	0.0117		12,490,800
12,500	0.0124		12,298,000
500		0.0007	
13,000	0.0130		12,266,430
500		0.0009	

Tensile strength, 20,200 lbs. per sq. in.

TEST NO. 6.

UNPLANED GUN IRON.

Gauged length, 13."5625.
Area of section, 1.0506 sq. in.

Loads Applied.	Elongation, Inches.	Sets, Inches.	E.
500	0.0000		
1,000	0.0003		21,505,580
1,500	0.0007		18,441,850
2,000	0.0011		18,441,850
2,500	0.0015		17,805,920
3,000	0.0019		17,445,000
3,500	0.0023		17,212,400
4,000	0.0027		17,050,000
4,500	0.0031		16,930,200
5,000	0.0036		16,363,900
500		0.0001	
5,500	0.0041		15,937,400
6,000	0.0046		15,435,000
6,500	0.0050		15,491,150
7,000	0.0055		15,256,440
500		0.0005	
7,500	0.0060		15,187,400
500		0.0005	
8,000	0.0063		15,368,480
500		0.0005	
8,500	0.0068		15,192,300
9,000	0.0074		14,929,830

Tensile strength, 17,990 lbs. per sq. in.

The piece broke first with a load of 18,900 lbs., exhibiting a bad flaw, and then, upon being re-tested broke at 28,450 lbs., or about 27,000 lbs. per sq. inch.

TEST NO. 7.

UNPLANED GUN IRON.

Gauged length, 13."3906.
Area of section, 1.0630 sq. in.

Loads Applied.	Elongation, Inches.	Sets, Inches.	E.
500	0.0000		
1,000	0.0003		22,903,620
1,500	0.0005		23,994,300
2,000	0.0008		22,903,620
2,500	0.0012		21,907,800
3,000	0.0016		20,316,700
3,500	0.0020		19,380,000
4,000	0.0024		18,761,470
4,500	0.0027		18,662,200
5,000	0.0031		18,286,000
5,500	0.0035		18,125,160
6,000	0.0039		17,995,300
6,500	0.0043		17,680,000
7,000	0.0047		17,421,370
7,500	0.0051		17,205,540
8,000	0.0055		17,177,700
500		0.0000	
8,500	0.0059		17,080,670
9,000	0.0064		16,862,100
500		0.0000	
9,500	0.0068		16,672,500
10,000	0.0072		16,621,370
500		0.0002	
10,500	0.0078		16,254,180
11,000	0.0082		16,130,300
500		0.0003	
11,500	0.0087		16,019,300
500		0.0004	
12,000	0.0092		15,746,240
500		0.0005	
12,500	0.0098		15,504,000
500		0.0008	
13,000	0.0104		15,213,760
500		0.0009	

A load of 13,250 lbs. remained upon this piece for seventeen hours, this load being just abovethe elastic limit.

TEST NO. 8.

SAME SPECIMEN RE-TESTED.

Loads Applied.	Elongation, Inches.	Sets, Inches.	E.
500	0.0000		
1,000	0.0003		20,995,000
1,500	0.0006		20,995,000
2,000	0.0009		20,427,550
2,500	0.0013		19,760,000
3,000	0.0017		19,076,300
3,500	0.0021		18,212,500
4,000	0.0025		17,995,700
4,500	0.0028		17,836,440
5,000	0.0032		17,714,500
5,500	0.0036		17,495,820
6,000	0.0040		17,429,800
6,500	0.0044		17,275,870
7,000	0.0048		17,147,750
7,500	0.0052		16,876,350
8,000	0.0056		16,796,000
500		0.0000	
8,500	0.0061		16,588,250
9,000	0.0065		16,536,580
9,500	0.0069		16,490,600
10,000	0.0073		16,449,700
500		0.0002	
10,500	0.0077		16,306,800
11,000	0.0081		16,279,200
500		0.0002	
11,500	0.0085		16,254,180
12,000	0.0089		16,231,410
12,500	0.0093		16,210,600
13,000	0.0098		16,108,680
500		0.0002	
13,500	0.0102		16,094,430
14,000	0.0108		15,782,750
14,500	0.0112		15,711,200
500		0.0003	
15,000	0.0118		15,446,600
500		0.0005	
16,000	0.0130		

A load of 16,000 lbs. was left upon the piece for 22 hours.

TEST NO. 9.

SAME SPECIMEN RE-TESTED A SECOND TIME.

Loads Applied.	Elongation, Inches.	Sets, Inches.	E.
500	0.0000		
1,000	0.0003		19,380,000
1,500	0.0006		20,156,200
2,000	0.0009		20,427,550
2,500	0.0012		20,995,000
3,000	0.0016		20,317,700
3,500	0.0019		19,631,700
4,000	0.0023		19,169,300
4,500	0.0028		18,323,000
5,000	0.0032		17,995,700
5,500	0.0035		17,868,100
6,000	0.0039		17,995,700
6,500	0.0043		17,784,000
7,000	0.0047		17,703,890
7,500	0.0050		17,548,000
8,000	0.0054		17,495,820
8,500	0.0058		17,450,400
9,000	0.0062		17,420,450
9,500	0.0065		17,375,160
10,000	0.0071		16,974,670
10,500	0.0075		16,796,000
11,000	0.0080		16,637,530
11,500	0.0084		16,545,300
500		0.0000	16,415,340
12,000	0.0088		
12,500	0.0093		16,342,042
13,000	0.0097		16,233,240
13,500	0.0102		16,134,100
14,000	0.0106		16,043,300
500		0.0002	
14,500	0.0111		15,960,000
15,000	0.0115		15,883,000
15,500	0.0120		15,779,100
16,000	0.0125		15,620,300
500		0.0001	
16,500	0.0130		15,504,000
500		0.0001	

Tensile strength, 25,494 lbs. per sq. in.

This piece broke first with a load of 27,100 lbs., exhibiting a flaw; upon being re-tested it broke with 30,450 lbs., or 28,750 lbs. per sq. inch.

TEST NO. 10.

UNPLANED GUN IRON.

Gauged length, 13".4844.

Area of section, 1.0620 sq. in.

Loads Applied.	Elongation, Inches.	Sets, Inches.	E.
500	0.0000		
1,000	0.0003		21,168,200
1,500	0.0006		22,088,600
2,000	0.0009		21,773,000
2,500	0.0012		21,618,630
3,000	0.0015		20,821,220
3,500	0.0019		20,054,100
4,000	0.0023		19,757,020
4,500	0.0027		18,816,200
5,000	0.0031		18,586,800
5,500	0.0035		18,184,200
6,000	0.0040		17,684,900
6,500	0.0044		17,518,545
7,000	0.0048		17,380,200
7,500	0.0052		17,180,000
500		0.0001	
8,000	0.0057		16,859,700
8,500	0.0061		16,657,000
500		0.0002	

Tensile strength, 21,657 lbs. per sq. in.

The piece broke first at 23,000 lbs., exhibiting a flaw, and on being re-tested it broke at 30,550 lbs., or 28,775 lbs. per sq. inch.

TEST NO. 11.

PLANED COMMON IRON.

Gauged length, 13".5274.

Area of section, 0.9937 sq. in.

Loads Applied.	Elongation, Inches.	Sets, Inches.	E
500	0.0000		
1,000	0.0004		19,447,200
1,500	0.0009		16,015,440
500		0.0000	
2,000	0.0014		14,329,500
2,500	0.0021		12,964,800
3,000	0.0028		12,154,500
500		0.0002	
3,500	0.0032		12,762,200
4,000	0.0040		12,062,200
500*		0.0004	
4,500	0.0044		12,446,200
500		0.0015	
5,000	0.0049		12,501,750
500		0.0015	
5,500	0.0056		12,154,500
500		0.0015	
6,000	0.0064		11,698,700
500		0.0018	
6,500	0.0068		12,100,000
500		0.0019	

A load of 10,000 lbs. was left upon this piece over night.

* Tightened the clamps.

TEST NO. 12.

SAME SPECIMEN RE-TESTED.

Loads Applied.	Elongation, Inches.	Sets, Inches.	E.
500	0.0000		
1,000	0.0004		18,150,700
1,500	0.0010		14,329,500
2,000	0.0016		13,173,900
2,500	0.0021		12,812,300
500		— 0.0001	
3,000	0.0029		11,941,250
3,500	0.0034		12,039,200
4,000	0.0039		12,216,800
500		0.0000	
4,500	0.0045		12,236,430
500		0.0000	
5,000	0.0051		12,070,700
500		0.0001	
5,500	0.0059		11,635,100
500		0.0001	
6,000	0.0064		11,790,600
500		0.0001	
6,500	0.0071		11,585,600
500		0.0001	
7,000	0.0078		11,344,200
500		0.0001	
7,500	0.0085		11,243,800
500		0.0001	
8,000	0.0093		11,037,600
500		0.0001	
8,500	0.0098		11,169,680
500		0.0001	
9,000	0.0106		10,890,430
500		0.0003	
9,500	0.0112		10,939,000
500		0.0003	
10,000	0.0121		10,732,250
500		0.0004	
10,500	0.0129		10,593,800
500		0.0006	
11,000	0.0139		10,320,350
500		0.0006	
11,500	0.0148		10,100,730
500		0.0009	
12,000	0.0157		9,971,330
500		0.0013	

A load of 14,000 lbs. was left upon this piece over night.

TEST NO. 13.

SAME SPECIMEN RE-TESTED A SECOND TIME.

Loads Applied.	Elongation, Inches.	Sets, Inches.	E.
500	0.0000		
1,000	0.0005		13,613,040
1,500	0.0011		12,964,800
2,000	0.0017		12,375,500
2,500	0.0024		11,585,540
3,000	0.0029		11,635,100
3,500	0.0035		11,585,540
4,000	0.0042		11,480,900
4,500	0.0048		11,463,600
5,000	0.0054		11,344,200
5,500	0.0061		11,250,440
6,000	0.0067		11,216,780
6,500	0.0075		10,900,460
7,000	0.0082		10,790,810
7,500	0.0091		10,529,420
8,000	0.0097		10,498,500
500		0.0001	
8,500	0.0105		10,421,500
9,000	0.0112		10,377,650
9,500	0.0119		10,274,000
10,000	0.0128		10,151,000
500		0.0002	
10,500	0.0135		10,121,200
11,000	0.0143		10,080,500
500		0.0002	
11,500	0.0151		9,936,500
12,000	0.0160		9,789,680
500		0.0003	
12,500	0.0170		9,637,550
500		0.0004	
13,000	0.0178		9,586,642
500		0.0004	
13,500	0.0185		9,591,840
500		0.0005	
14,000	0.0192		9,589,220
500		0.0006	
14,500	0.0206		9,270,480
500		0.0010	

Tensile strength, 20,800 lbs. per sq. in.

TEST NO. 14.

PLANED COMMON IRON.

Gauged length, 13.″461.
Area of section, 0.9852 sq. in.

Loads Applied.	Elongation, Inches.	Sets, Inches.	E.
500	0.0000		
1,000	0.0004		19,518,890
1,500	0.0008		18,217,600
2,000	0.0012		17,071,150
2,500	0.0018		15,615,100
3,000	0.0024		14,232,000
3,500	0.0030		13,663,200
500		0.0000	
4,000	0.0037		12,837,900
4,500	0.0043		12,710,000
500		0.0002	
5,000	0.0048		12,742,900
500		0.0002	
5,500	0.0054		12,769,360
500		0.0004	
6,000	0.0060		12,629,900
500		0.0009	
6,500	0.0068		12,145,100
500		0.0010	
7,000	0.0075		11,802,000
500		0.0011	
7,500	0.0083		11,628,300
500		0.0013	
8,000	0.0089		11,481,700
500		0.0014	
8,500	0.0096		11,386,000
500		0.0018	
9,000	0.0102		11,430,200
500		0.0019	
9,500	0.0115		11,028,600
500		0.0021	
10,000	0.0122		10,661,250
500		0.0023	

TEST NO. 15.

SAME SPECIMEN RE-TESTED.

Loads Applied.	Elongation, Inches.	Sets, Inches.	E.
500	0.0000		
1,000	0.0004		18,217,400
1,500	0.0008		17,630,000
2,000	0.0013		16,777,700
2,500	0.0018		14,973,400
3,000	0.0024		14,085,465
3,500	0.0031		13,439,240
4,000	0.0036		13,101,260
4,500	0.0042		12,935,590
5,000	0.0048		12,809,270
500		−0.0001	
5,500	0.0055		12,421,100
6,000	0.0061		12,319,300
500		−0.0001	
6,500	0.0067		12,190,230
7,000	0.0074		12,083,110
7,500	0.0081		11,855,200
8,000	0.0088		11,600,850
500		−0.0001	
8,500	0.0096		11,356,700
9,000	0.0103		11,248,170
9,500	0.0110		11,153,450
500		0.0000	
10,000	0.0119		10,930,510
500		0.0001	
10,500	0.0129		10,612,200
500		0.0003	
11,000	0.0139		10,321,150
500		0.0005	
11,500	0.0148		10,138,000
500		0.0007	
12,000	0.0162		9,714,190

TEST NO. 16.

SAME SPECIMENS RE-TESTED A SECOND TIME.

Loads Applied.	Elongation, Inches.	Sets, Inches.	E.
500	0.0000		
1,000	0.0005		13,663,220
1,500	0.0012		11,881,090
2,000	0.0017		12,421,100
2,500	0.0023		12,145,100
3,000	0.0028		12,191,340
3,500	0.0035		11,881,090
4,000	0.0043		11,252,060
4,500	0.0050		10,930,600
5,000	0.0056		10,979,370
500		0.0002	
5,500	0.0063		10,930,600
6,000	0.0070		10,812,620
6,500	0.0077		10,646,700
7,000	0.0084		10,572,730
500		0.0001	
7,500	0.0090		10,626,950
8,000	0.0097		10,564,340
8,500	0.0104		10,510,160
9,000	0.0111		10,486,400
500		0.0002	
9,500	0.0118		10,465,440
10,000	0.0125		10,425,750
10,500	0.0132		10,331,350
11,000	0.0140		10,247,410
500		0.0002	
11,500	0.0149		10,086,900
12,000	0.0158		9,976,310
500		0.0003	
12,500	0.0164		10,012,735
500		0.0002	
13,000	0.0174		9,843,800
500		0.0002	
13,500	0.0182		9,759,440
500		0.0002	
14,000	0.0191		9,682,590
500		0.0005	
14,500	0.0202		9,430,500
500		0.0010	

Tensile strength, 20,300 lbs. per sq. in.

TEST NO. 17.

PLANED COMMON IRON.

Gauged length, 13".582.
Area of section, 0.996 sq. in.

Loads, Applied.	Elongation, Inches.	Sets, Inches.	E.
500	0.0000		
1,000	0.0005		15,151,720
1,500	0.0009		16,054,000
2,000	0.0014		14,610,600
2,500	0.0019		14.354,260
3,000	0.0025		13,636,550
3,500	0.0032		12,987,200
4,000	0.0037		12,899,440
500		0.0000	
4,500	0.0044		12,114,840
5,000	0.0051		11,973,550
5,500	0.0059		11,605,570
6,000	0.0066		11,363,800
500		0.0006	
6,500	0.0071		11,605,570
7,000	0.0078		11,437,100
500		0.0008	
7,500	0.0084		11,429,200
500		0 0011	
8,000	0.0091		11,238,900
500		0.0014	
8,500	0.0102		10.748,000
500		0.0017	
9,000	0.0109		10,634,000
500		0.0019	
9,500	0.0116		10,580,080
500		0.0022	
10,000	0.0123		10,575,300

TEST NO. 18.

THE SAME RE-TESTED.

Loads Applied.	Elongation, Inches.	Sets, Inches.	E.
500	0.0000		
1,000	0.0005		15,151,720
1,500	0.0009		15,151,720
2,000	0.0014		15,151,720
2,500	0.0019		14,742,215
3,000	0.0024		14,204,740
3,500	0.0030		13,867,700
4,000	0.0036		13,444,480
4,500	0.0042		13,143,660
5,000	0.0049		12,523,360
500		−0.0002	
5,500	0.0056		12,285,200
6,000	0.0063		12,000,170
500		−0.0002	
6,500	0.0070		11,688,500
7,000	0.0077		11,586,600
500		−0.0002	
7,500	0.0084		11,431,840
8,000	0.0092		11,177,500
500		−0.0003	
8,500	0.0099		11,019,430
500		−0.0002	
9,000	0.0106		10,935,000
500		−0.0002	
9,500	0.0114		10,813,120
500		−0.0001	
10,000	0.0121		10,706,130
500		0.0001	
10,500	0.0129		10,611,860
500		0.0002	
11,000	0.0139		10,301,000
500		0.0005	
11,500	0.0150		10,000,000
500		0.0009	
12,000	0.0162		9,710,230

TEST NO. 19.

SAME SPECIMEN RE-TESTED A SECOND TIME.

Loads Applied.	Elongation, Inches.	Sets, Inches.	E.
500	0.0000		
1,000	0.0006		13,396,900
1,500	0.0011		12,987,200
2,000	0.0017		12,396,900
2,500	0.0023		12,121,380
3,000	0.0029		11,755,600
3,500	0.0035		11,688,500
4,000	0.0041		11,640,900
4,500	0.0048		11,483,400
5,000	0.0054		11,363,800
5,500	0.0061		11,288,520
6,000	0.0068		11,029,560
6,500	0.0076		10,837,000
7,000	0.0083		10,679,200
7,500	0.0091		10,587,600
8,000	0.0098		10,424,120
500		0.0000	
8,500	0.0105		10,437,050
9,000	0.0114		10,212,400
500		0.0000	
9,500	0.0121		10,198,700
10,000	0.0129		10,042,400
500		0.0001	
10,500	0.0138		9,917,490
500		0.0001	
11,000	0.0146		9,840,810
500		0.0001	
11,500	0.0153		9,836,200
500		0.0002	
12,000	0.0160		9,832,000
500		0.0001	
12,500	0.0171		9,597,570
500		0.0001	
13,000	0.0178		9,576,230
500		0.0003	
13,500	0.0189		9,379,640
500		0.0004	
14,000	0.0198		9,279,650

Tensile strength, 20,450.

TEST NO. 20.

PLANED GUN IRON.

Gauged length, 13."2774.
Area of section, 1.0028 sq. in.

Loads Applied.	Elongation, Inches.	Sets, Inches.	E.
500	0.0000		
1,000	0.0004		18,879,100
1,500	0.0007		18,879,100
2,000	0.0011		18,055,000
2,500	0.0015		17,603,000
3,000	0.0019		17,195,100
3,500	0.0024		16,724,600
4,000	0.0028		16,403,950
4,500	0.0033		16,171,410
5,000	0.0038		15,888,400
500		0.0002	
5,500	0.0041		16,048,900
6,000	0.0046		16,004,800
6,500	0.0050		15,888,400
7,000	0.0055		15,791,200
500		0.0002	
7,500	0.0059		15,642,550
500		0.0003	
8,000	0.0066		15,160,680
8,500	0.0070		15,240,680
500		0.0007	
9,000	0.0073		15,523,100
9,500	0.0077		15,576,800
500		0.0008	
10,000	0.0081		15,529,800
500		0.0009	
10,500	0.0086		15,395,800
500		0.0009	
11,000	0.0091		15,277,300
500		0.0010	
11,500	0.0097		15,092,600
500		0.0011	
12,000	0.0102		15,075,600
500		0.0014	

Tensile strength, 29,500.

TEST NO. 21.

SAME SPECIMEN RE-TESTED.

Loads Applied.	Elongation, Inches.	Sets, Inches.	E.
500	0.0000		
1,000	0.0004		17,653,780
1,500	0.0008		17,653,780
2,000	0.0012		17,270,000
2,500	0.0016		17,084,320
3,000	0.0020		16,974,800
3,500	0.0024		16,550,400
4,000	0.0029		16,260,000
4,500	0.0033		16,295,800
5,000	0.0037		16,323,700
5,500	0.0041		16,146,740
500		0.0000	
6,000	0.0046		16,004,800
6,500	0.0050		15,888,400
7,000	0.0055		15,792,600
7,500	0.0059		15,708,860
500		0.0001	
8,000	0.0064		15,576,850
8,500	0.0069		15,463,150
9,000	0.0073		15,469,800
500		0.0001	
9,500	0.0078		15,277,660
10,000	0.0083		15,246,440
10,500	0.0087		15,218,770
500		0.0002	
11,000	0.0092		15,111,200
11,500	0.0097		15,014,800
500		0.0002	
12,000	0.0102		14,927,800
12,500	0.0107		14,849,000
500		0.0004	
13,000	0.0113		14,711,480
13,500	0.0117		14,711,480
500		0 0004	
14,000	0.0123		14,711,480
14,500	0.0128		14,481,600
500		0.0006	

TEST NO. 22.

SAME SPECIMEN RE-TESTED A SECOND TIME.

Loads Applied.	Elongation, Inches.	Sets, Inches.	E.
500	0.0000		
1,000	0.0004		17,653,900
1,500	0.0008		17,653,900
2,000	0.0011		17,653,900
2,500	0.0016		17,084,300
3,000	0.0020		16,759,900
3,500	0.0024		16,550,410
4,000	0.0028		16,404,000
4,500	0.0033		16,295,800
5,000	0 0037		15,995,000
5,500	0.0042		15,856,700
6,000	0.0046		15,827,200
6,500	0.0051		15,653,600
7,000	0.0056		15,506,700
500		0.0005	
7,500	0.0061		15,319,400
8,000	0.0065		15,395,700
8,500	0.0068		15,576,890
9,000	0.0072		15,740,300
9,500	0.0076		15,783,170
10,000	0.0080		15,722,900
500		0.0002	
10,500	0.0088		15,131,800
11,000	0.0093		15,029,600
11,500	0.0098		14,937,800
12,000	0.0103		14,855,000
500		0.0001	
12,500	0.0109		14,644,000
13,000	0.0113		14,646,720
13,500	0.0118		14,586,800
500		0.0002	
14,000	0.0123		14,532,090
14,500	0.0128		14,152,000
500		0.0002	
15,000	0.0134		14,327,220
500		0.0002	
15,500	0.0140		14,160,780
500		0.0003	
16,000	0.0146		14,056,500
500		0.0004	
16,500	0.0152		13,937,200
500		0.0006	
17,000	0.0158		13,870,800
500		0.0009	

Tensile strength, 29,500.

TEST NO. 23.

PLANED GUN IRON.

Gauged length, 13.508 in.
Area of section, 0.9930 sq. in.

Loads Applied.	Elongation, Inches.	Sets, Inches.	E.
500	0.0000		
1,000	0.0003		20,927,000
1,500	0.0007		20,927,000
2,000	0.0010		20,404,850
2,500	0.0014		19,786,500
3,000	0.0018		19,433,200
3,500	0.0021		19,204,560
4,000	0.0025		18,856,000
4,500	0.0029		18,602,700
5,000	0.0034		18,273,000
500		−0.0001	
5,500	0.0039		17,440,000
6,000	0 0044		17,199,500
6,500	0.0048		17,004,000
7,000	0.0053		16,684,000
500		0.0000	
7,500	0.0057		16,632,800
8,000	0.0062		16,455,550
8,500	0.0067		16,242,650
500		0.0002	
9,000	0.0071		16,228,400
9,500	0.0077		16,003,800
500		0.0005	
10,000	0.0081		16,053,500
500		0.0006	
10,500	0.0087		15,726,270
500		0.0008	
11,000	0.0090		15,870,430
500		0.0010	
11,500	0.0095		15,834,450
500		0.0013	
12,000	0.0099		15,881,940

TEST NO. 24.

SAME SPECIMEN RE-TESTED.

Loads Applied.	Elongation, Inches.	Sets, Inches.	E.
500	0.0000		
1,000	0.0004		19,433,200
1,500	0.0007		18,763,070
2,000	0.0011		18,549,900
2,500	0.0016		17,552,550
500		0.0001	
3,000	0.0020		17,219,270
3,500	0.0024		17,004,030
4,000	0.0029		16,705,700
4,500	0.0033		16,488,760
5,000	0.0038		16,323,860
5,500	0.0042		16,194,300
6,000	0.0047		16,089,900
6,500	0.0051		16,003,800
7,000	0.0056		15,931,740
7,500	0.0060		15,870,430
8,000	0.0065		15,817,700
500		0.0001	
8,500	0.0070		15,858,400
9,000	0.0074		15,625,330
9,500	0.0079		15,596,053
10,000	0.0083		15,569,950
500		0.0002	
10,500	0.0088		15,546,540
11,000	0.0092		15,525,420
11,500	0.0097		15,426,340
500		0.0004	
12,000	0.0101		15,527,250
500		0.0004	
12,500	0 0106		15,472,900
500		0.0005	
13,000	0.0110		15,459,200
500		0.0005	
13,500	0.0116		15,311,000
500		0.0006	
14,000	0.0121		15,240,130

TEST NO. 25.

SAME SPECIMEN RE-TESTED A SECOND TIME.

Loads Applied.	Elongation, Inches.	Sets, Inches.	E.
500	0.0000		
1,000	0.0004		18,137,700
1,500	0.0008		18,137,700
2,000	0.0012		17,743,340
2,500	0.0016		17,552,550
3,000	0.0020		17,440,030
3,500	0.0023		17,740,340
4,000	0.0027		17,633,800
4,500	0.0031		17,552,550
5,000	0.0035		17,489,900
5,500	0.0040		17,219,280
6,000	0.0044		17,004,030
6,500	0.0049		16,828,740
7,000	0.0053		16,682,200
7,500	0.0058		16,556,560
8,000	0.0062		16,455,500
8,500	0.0067		16,364,800
9,000	0.0071		16,285,550
9,500	0.0076		16,215,260
10,000	0.0080		16,153,800
500		0.0000	
10,500	0.0085		16,051,000
11,000	0.0089		15,959,100
11,500	0.0094		15,876,440
12,000	0.0099		15,801,730
500		0.0000	
12,500	0.0105		15,620,900
13,000	0.0112		15,250,250
500		0.0000	
13,500	0.0118		14,990,060
14,000	0.0123		14,930,375
500		0.0001	
14,500	0.0128		14,849,530
500		0.0001	
15,000	0.0133		14,886,550
500		0.0001	
15,500	0.0138		14,839,900
500		0.0002	
16,000	0.0143		14,796,500
500		0.0003	
16,500	0.0149		14,583,025
500		0.0006	
17,000	0.0156		14,388,000

Tensile strength 31,000.

TEST NO. 26.

PLANED GUN IRON.

Gauged length, 13".5274.
Area of section, 0.99 sq. in.

Loads Applied.	Elongation, Inches.	Sets, Inches.	E.
500	0.0000		
1,000	0.0003		21,021,600
1,500	0.0007		21,021,600
2,000	0.0010		21,021,600
2,500	0.0013		20,625,000
3,000	0.0017		20,694,200
3,500	0.0021		19,520,050
4,000	0.0025		19,129,700
4,500	0.0029		18,847,000
5,000	0.0034		18,218,320
500		—0.0001	
5,500	0.0039		17,631,020
6,000	0.0044		17,276,400
6,500	0.0048		17,080,000
7,000	0.0053		16,917,400
7,500	0.0057		16,780,400
500		0.0002	
8,000	0.0062		16,529,100
8,500	0.0067		16,315,300
500		0.0004	
9,000	0.0071		16,301,000
9,500	0.0077		16,075,320
500		0.0005	
10,000	0.0082		15,927,400
500		0.0006	
10,500	0.0086		15,888,420
500		0.0008	
11,000	0.0093		15,510,530
500		0.0009	
11,500	0.0098		15,415,850
500		0.0011	
12,000	0.0101		15,558,060

TEST NO. 27.

SAME SPECIMEN RE-TESTED.

Loads Applied.	Elongation, Inches.	Sets, Inches.	E.
500	0.0000		
1,000	0.0004		19,520,060
1,500	0.0007		19,520,060
2,000	0.0011		19,066,100
2,500	0.0015		18,846,950
3,000	0.0019		18,218,720
3,500	0.0023		17,882,670
4,000	0.0028		17,390,600
4,500	0.0032		17,351,170
5,000	0.0036		17,320,600
5,500	0.0040		17,186,710
500		0.0001	
6,000	0.0044		17,177,500
6,500	0.0049		16,606,935
7,000	0.0054		16,447,460
7,500	0.0059		16,211,940
8,000	0.0064		16,059,445
500		0.0002	
8,500	0.0070		15,728,400
9,000	0.0074		15,695,200
9,500	0.0078		15,766,200
500		0.0002	
10,000	0.0083		15,592,600
10,500	0.0088		15,616,050
11,000	0.0093		15,510,540
500		0.0002	
11,500	0.0097		15,455,475
12,000	0.0102		15,367,850
500		0.0004	
12,500	0.0106		15,468,700
500		0.0004	
13,000	0.0111		15,387,440
500		0.0004	
13,500	0.0116		15,280,340
500		0.0004	
14,000	0.0122		15,182,270
500		0.0005	

Tensile strength, 31,000.

TEST NO. 28.

SAME SPECIMEN RE-TESTED A SECOND TIME.

Loads Applied.	Elongation, Inches.	Sets, Inches.	E.
500	0.0000		
1,000	0.0004		18,176,400
1,500	0.0008		18,176,400
2,000	0.0012		17,781,700
2,500	0.0016		17,714,500
3,000	0.0020		16,830,400
3,500	0.0025		16,524,400
4,000	0.0029		16,312,530
4,500	0.0034		16,120,000
5,000	0.0038		16,038,370
5,500	0.0043		15,907,900
6,000	0.0047		15,868,650
6,500	0.0052		15,806,000
7,000	0.0056		15,753,250
7,500	0.0061		15,708,360
8,000	0.0066		15,609,500
8,500	0.0070		15,524,700
9,000	0.0075		15,450,200
9,500	0.0080		15,336,700
10,000	0.0086		14,999,200
500		0.0002	
10,500	0.0091		14,980,900
11,000	0.0095		15,067,620
11,500	0.0100		15,071,200
12,000	0.0104		15,074,530
12,500	0.0109		15,008,380
13,000	0.0114		15,013,900
13,500	0.0119		14,955,600
14,000	0.0124		14,914,100
14,500	0.0129		14,852,750
500		0.0003	
15,000	0.0134		14,724,250
15,500	0.0140		14,580,330
16,000	0.0146		14,448,250
500		0.0003	
16,500	0.0152		14,346,820
17,000	0.0158		14,259,150
500		0.0005	

Tensile strength, 31,000 lbs. per square inch.

From these tests Mr. Cochran obtains the following as averag values for the specimens tested, viz.:

For tensile strength:

Unplaned common	22,066
Planed common	20,520
Unplaned gun	21,714
Planed gun	30,500

For limit of elasticity:

Unplaned common	6,500
Planed common	5,833
Unplaned gun	11,000
Planed gun	8,500

For modulus of elasticity at assumed elastic limit:

Unplaned common	13,194,233
Planed common	11,943,953
Unplaned gun	16,130,300
Planed gun	15,932,880

Colonel Rosset of the Turin arsenal gave for gun iron, as average limit of elasticity 9,800, and as average modulus of elasticity 16,263,300.

Mr. Cochran attributes the apparent anomaly in the case of gun iron, whose average tensile strength is less in the unplaned than in the planed, to the presence of surface flaws in the unplaned gun.

Mr. Cochran draws from his tests the following conclusions, viz.:

1°. Planed pieces stretch more than unplaned.

2°. The moduli of planed are higher than those of unplaned pieces.

3°. Common iron stretches from $\frac{1}{3}$ to $\frac{1}{2}$ more than gun iron.

4°. The elastic limit for unplaned is higher than that for planed.

5°. The effect of re-testing is to lower the modulus of elasticity, to raise the elastic limit, to make the stretch more nearly equal on the two sides, and probably to lower the tensile strength.

SUMMARY OF THE EXPERIMENTS OF MESSRS. BURGESS AND VIELÉ.

The object of this investigation was to determine the transverse strength of cast iron in the form of window lintels, and also the deflections under moderate loads, and from the latter to deduce the modulus of elasticity of the cast iron, and to compare it with the modulus of elasticity of the same iron, as determined from tensile experiments; also the tensile strength and limit of elasticity of specimens taken from different parts of the lintel were determined.

The iron used was of two qualities, marked *P* and *S* respectively; that marked *P* was composed of what was called at the foundry of L. M. Ham & Co., where the casting was done, No. 1 and No. 2 pig.

No. 1 pig was prepared by mixing the following ores:

Neshannock from Pennsylvania	25%
Franklin from New York	37.5%
Crozen from Virginia	37.5%

No. 2 pig was made by mixing Franklin and Crozen in equal parts.

The chemical composition of *P* is as follows:

Graphite	3.00
Combined carbon	0.56
Sulphur	0.53
Silicon	1.34
Phosphorus	1.13
Manganese	0.33
Iron, by difference	93.11

The iron marked *S* was made of old scrap. Its chemical composition was as follows:

Graphite	2.39
Combined carbon	0.85
Sulphur	0.07
Silicon	1.49
Phosphorus	1.12
Manganese	0.40
Iron, by difference	93.68

The specimens for tension were 24 inches long, and about one inch square in section.

The transverse tests were made on window lintels of the following dimensions:

	Inches.
Length	54
Breadth of flange	8
Height of web at the centre of lintel above flange	4
Height of web at edge of lintel above flange	2.5
Thickness of web and flange	0.75

The tensile specimens were cast at the same time, and from the same run as the lintels.

Besides this, one of each kind of window lintels was cut up into tensile specimens, and the specimens were so marked as to show from what part of the lintel they were cut.

The tables of tests will now be given, and the following explanation of the symbolism employed.

P and *S* are used, as already stated, to denote the quality of the iron.

A and *B* are used to denote respectively that the specimen was unplaned or planed.

1, 2, 3, etc., denote the number of the test made on that particular kind and condition.

I., II., III., denote that the piece has been taken from a lintel, and also from what part, as will easily be seen by the accompanying sketch (Fig. 31).

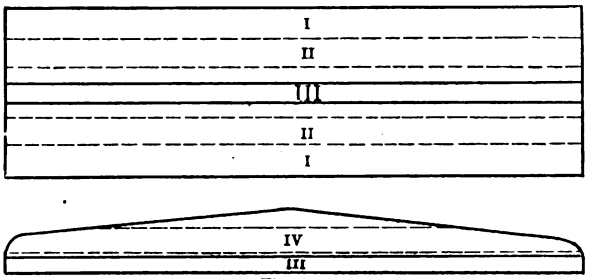

Fig. 31.

Thus *P. B.* 3 would signify that the specimen was of quality *P*, had been planed, and was the third test of this class.

On the other hand, *P. B.* 3 II., would signify in addition that it had been taken from a lintel, and was a piece of one of the strips marked II. in the sketch.

Loads applied.	P. A. 1. Area = 1.0568 sq. in.			S. A. 1. Area = 0.9683 sq. in.			S. A. 2. Area = 1.0302 sq. in.			P. A. 2. Area = 1.0323 sq. in.			S. A. 3. Area = 1.02 sq. in.			P. A. 3. Area = 1.027 sq. in.		
	Loads per sq. in.	Elongations, inches.	E.	Loads per sq. in.	Elongations, inches.	E.	Loads per sq. in.	Elongations, inches.	E.	Loads per sq. in.	Elongations, inches.	E.	Loads per sq. in.	Elongations, inches.	E.	Loads per sq. in.	Elongations, inches.	E.
500	473	0.0000		516	0.0000		485	0.0000		484	0.0000		490	0.0000		487	0.0000	
1,000										969	0.0002	24,224,845				974	0.0003	16,228,496
1,500										1,453	0.0004	24,224,845				1,461	0.0008	12,982,798
2,000										1,937	0.0007	21,533,186				1,947	0.0012	13,291,913
2,500	2,365	0.0014	14,002,664	2,582	0.0011	18,777,052				2,422	0.0010	20,187,357	2,451	0.0011	17,825,311	2,434	0.0015	13,446,471
3,000							2,912	0.0010	24,267,133	2,906	0.0014	18,918,435				2,921	0.0018	14,002,876
3,500										3,390	0.0016	18,995,337				3,408	0.0022	13,987,420
4,000										3,875	0.0019	18,588,841				3,895	0.0026	13,534,789
4,500	4,257	0.0027	14,271,942	4,647	0.0022	18,777,052				4,359	0.0024	17,611,059	4,412	0.0022	18,249,723	4,382	0.0030	13,581,708
5,000										4,844	0.0028	17,000,099				4,869	0.0034	13,425,004
5,500							5,339	0.0024	21,121,393	5,328	0.0032	16,511,331				5,355	0.0037	13,705,353
6,000										5,812	0.0036	16,111,430				5,842	0.0040	13,442,958
6,500	6,150	0.0044	13,115,313	6,713	0.0034	18,504,922				6,297	0.0040	15,778,180	6,373	0.0033	17,849,914	6,329	0.0044	13,336,992
7,000										6,781	0.0045	15,309,852				6,816	0.0048	13,247,329
7,500										7,265	0.0049	14,985,353				7,303	0.0053	12,996,599
8,000							7,766	0.0039	19,299,667	7,750	0.0054	14,704,101				7,790	0.0057	12,941,587
8,500	8,042	0.0062	12,536,399	8,778	0.0047	17,850,759				8,234	0.0058	14,458,006	8,333	0.0048	17,309,004	8,276	0.0062	12,741,304
9,000										8,718	0.0063	14,240,805				8,763	0.0067	12,628,227
9,500										9,203	0.0068	13,988,034				9,250	0.0073	12,377,451
10,000										9,687	0.0072	13,818,482				9,735	0.0077	12,366,604
10,500	9,924	0.0080	11,889,057	10,843	0.0061	17,129,539	10,192	0.0054	18,519,273	10,171	0.0077	13,612,055	10,294	0.0062	16,461,582	10,224	0.0083	12,153,986
11,000										10,656	0.0083	13,323,348				10,711	0.0087	12,154,814
11,500										11,140	0.0088	13,215,465				11,198	0.0093	11,971,152
12,000										11,624	0.0093	13,062,181				11,684	0.0097	11,979,857
12,500				12,909	0.0076	16,569,589				12,109	0.0098	12,921,669	12,255	0.0076	16,052,252	12,171	0.0103	11,818,791
13,000							12,619	0.0073	17,369,853							12,658	0.0111	11,589,466
13,500																13,145	0.0118	11,393,385
14,000																13,632	0.0124	11,299,258
14,500													14,216	0.0091	15,626,487			
15,000																		
15,500							15,045	0.0093	16,547,325									
16,000																		
16,500													16,177	0.0109	15,034,833			
	Breaking load 25,110			Breaking load 23,440			Breaking load 26,020			Breaking load 22,115			Breaking load 25,200			Breaking load 19,450		
	Per sq. in..... ..23,757			Per sq. in 24,204			Per sq. in..... 25,258			Per sq. in..... 21,423			Per sq. in..... 24,706			Per sq. in..... 18,938		

Loads applied.	P. A. 4. Area = 1.0514 sq. in.			P. B. 1. Area = 0.828 sq. in.			S. B. 1. Area = 0.846 sq. in.			P. B. 3. Area = 0.9025 sq. in.			P. B. 4. II. Area = 0.7598 sq. in.			S. B. 2. Area = 0.837 sq. in.		
	Loads per sq. in.	Elongations, inches.	E.	Loads per sq. in.	Elongations, inches.		Loads per sq. in.	Elongations, inches.	E.	Loads per sq. in.	Elongations, inches.	E.	Loads per sq. in.	Elongations, inches.	E.	Loads per sq. in.	Elongations, inches.	E.
500	476	0.0000		604	0.0000		591	0.0000		554	0.0000		658	0.0000		597	0.0000	
1,000																		
1.500	1,427	0.0004	23,777,819	1,812	0.0007	17,253,675	1,773	0.0005	23,640,661	1,662	0.0006	20,146,060	1,974	0.0007	18,801,511	1,792	0.0007	17,067,759
2,000																		
2,500	2,378	0.0013	17,172,869	3,020	0.0014	17,253,675	2,955	0.0011	21,670,604	2,770	0.0013	17,459,918	3,290	0.0018	15,383,177	2,987	0.0014	17,067,759
3,000																		
3,500	3,329	0.0017	19,374,519	4,228	0.0023	16,238,618	4,137	0.0018	20,508,776	3,878	0.0022	15,742,772	4,606	0.0031	13,630,160	4,181	0.0021	17,067,759
4,000																		
4.500	4,280	0.0025	17,701,265	5,436	0.0034	14,923,803	5,319	0.0026	18,958.150	4,986	0.0030	15,501,273	5,922	0.0046	12,416,202	5,376	0.0028	17,067,759
5,000																		
5,500	5,231	0.0033	16,538,794	6,644	0.0046	13,951,927	6,501	0.0033	18,463,757	6,094	0.0041	14,415,624	7,238	0.0062	11.631,163	6,571	0.0036	16,641,065
6,000																		
6,500	6,182	0.0010	16,046,883	7,852	0.0056	13,639,488	7,683	0.0041	17,848,999	7,202	0.0051	13,771,804	8,554	0.0079	10,946,096	7,766	0.0044	16,356,602
7,000																		
7,500	7,133	0.0048	15,852,886	9,060	0.0070	12.923,364	8,865	0.0049	17,409,886	8,310	0.0062	13,311,931	9.870	0.0102	10,218,014	8,960	0.0053	16,027,916
8,000																		
8,500	8,084	0.0063	14,313,869	10,268	0.0085	12,314,381	10,047	0.0059	16,711,192	9,418	0.0073	12,852,324	11,186	0.0127	9,598,955	10,155	0.0062	15,596,457
9,000																		
9,500	9,035	0.0070	14,132,495	11,476	0.0101	11,759,401	11,229	0.0069	16,236,888	10,526	0.0086	12,371,325	12,502	0.0155	9,045,518	11,350	0.0071	15,425,273
10,000																		
10,500	9,987	0.0080	13,670,359	12,684	0.0119	11.273,592	12,411	0.0079	15,795,232	11,634	0.0104	11,767,354	13,818	0.0192	8,501,551	12,544	0.0081	15,020,599
11,000																		
11,500	10,938	0.0091	14,160,164	13,892	0.0138	10,826,581	13,593	0.0088	15,490,434	12,742	0.0115	11,573,510				13,739	0.0092	14,689,502
12 000																		
12,500	11,889	0.0101	12,933,411	15,100	0.0160	10,381,839	14,775	0.0099	15,137,686	13,850	0.0133	11,136,686				14,934	0.0102	14,460,997
13,000																		
13,500	12,840	0.0114	12,506,860	16,308	0.0184	9,970,329	15,957	0.0111	14,700,653	14,958	0.0152	10,728,614				16,128	0.0112	14,223,884
14,000																		
14,500	13,791	0.0128	12,082,043	17,516	0.0212	9,566,257	17,139	0.0123	14,384,789	16,066	0.0171	10,378,838				17,323	0.0123	13,983,702
15,000																		
15,500	14,742	0.0142	11,746,257	18,724	0.0246	9,165,316	18,321	0.0136	14,031,974	17,174	0.0193	10,015,229				18,518	0.0136	13,688,653
16,000																		
16,500	15,693	0.0159	11,351,799				19,503	0.0148	13,770,617									
	Breaking load.....22,510			Breaking load.....18,010			Breaking load.....25,020			Breaking load.....22,750			Breaking load.....14,450			Breaking load.....19,420		
	Per sq. in.....21,409			Per sq. in.....21,756			Per sq. in.....29,574			Per sq. in.....25,207			Per sq. in.....19,016			Per sq. in.....23,201		

Loads applied.	P. A. 1. Area = 1.0568 sq. in.			S. A. 1. Area = 0.9683 sq. in.			S. A. 2. Area = 1.0302 sq. in.			P. A. 2. Area = 1.0323 sq. in.			S. A. 3. Area = 1.02 sq. in.			P. A. 3. Area = 1.027 sq. in.		
	Loads per sq. in.	Elongations, inches.	E.	Loads per sq. in.	Elongations, inches.	E.	Loads per sq. in.	Elongations, inches.	E.	Loads per sq. in.	Elongations, inches.	E.	Loads per sq. in.	Elongations, inches.	E.	Loads per sq. in.	Elongations, inches.	E.
500	473	0.0000		516	0.0000		485	0.0000		484	0.0000		490	0.0000		487	0.0000	
1,000										969	0.0002	24,224,845				974	0.0003	16,228,496
1,500										1,453	0.0004	24,224,845				1,461	0.0008	12,982,798
2,000										1,937	0.0007	21,533,186				1,947	0.0012	13,291,913
2,500	2,365	0.0014	14,002,664	2,582	0.0011	18,777,052				2,422	0.0010	20,187,357	2,451	0.0011	17,825,311	2,434	0.0015	13,446,471
3,000							2,912	0.0010	24,267,133	2,906	0.0014	18,918,435				2,921	0.0018	14,002,876
3,500										3,390	0.0016	18,995,337				3,408	0.0022	13,987,420
4,000										3,875	0.0019	18,588,841				3,895	0.0026	13,534,789
4,500	4,257	0.0027	14,271,942	4,647	0.0022	18,777,052				4,359	0.0024	17,611,059	4,412	0.0022	18,249,723	4,382	0.0030	13,581,708
5,000										4,844	0.0028	17,000,099				4,869	0.0034	13,425,004
5,500							5,339	0.0024	21,121,393	5,328	0.0032	16,511,331				5,355	0.0037	13,705,353
6,000										5,812	0.0036	16,111,430				5,842	0.0040	13,442,958
6,500	6,150	0.0044	13,115,313	6,713	0.0034	18,504,922				6,297	0.0040	15,778,180	6,373	0.0033	17,849,914	6,329	0.0044	13,336,992
7,000										6,781	0.0045	15,309,852				6,816	0.0048	13,247,329
7,500										7,265	0.0049	14,985,353				7,303	0.0053	12,996,599
8,000							7,766	0.0039	19,299,667	7,750	0.0054	14,704,101				7,790	0.0057	12,941,587
8,500	8,042	0.0062	12,536,999	8,778	0.0047	17,850,759				8,234	0.0058	14,458,006	8,333	0.0048	17,309,004	8,276	0.0062	12,741,304
9,000										8,718	0.0063	14,240,805				8,763	0.0067	12,628,227
9,500										9,203	0.0068	13,988,034				9,250	0.0073	12,377,451
10,000										9,687	0.0072	13,818,482				9,735	0.0077	12,366,604
10,500	9,924	0.0080	11,889,057	10,843	0.0061	17,129,539	10,192	0.0054	18,519,273	10,171	0.0077	13,612,055	10,294	0.0062	16,461,582	10,224	0.0083	12,153,986
11,000										10,656	0.0083	13,323,348				10,711	0.0087	12,154,814
11,500										11,140	0.0088	13,215,465				11,198	0.0093	11,971,152
12,000										11,624	0.0093	13,062,181				11,684	0.0097	11,979,857
12,500				12,909	0.0076	16,569,589				12,109	0.0098	12,921,669	12,255	0.0076	16,052,252	12,171	0.0103	11,818,791
13,000							12,619	0.0073	17,369,853							12,658	0.0111	11,589,466
13,500																13,145	0.0118	11,393,385
14,000																13,632	0.0124	11,299,258
14,500													14,216	0.0091	15,626,487			
15,000																		
15,500							15,045	0.0093	16,547,325									
16,000																		
16,500													16,177	0.0109	15,034,833			
	Breaking load..... 25,110 Per sq. in..... ..23,757			Breaking load .....23,440 Per sq. in 24,204			Breaking load .....26,020 Per sq. in.....25,258			Breaking load .....22,115 Per sq. in.....21,423			Breaking load .....25,200 Per sq. in.....24,706			Breaking load .....19,450 Per sq. in.....18,938		

Loads applied.	P. A. 4. Area = 1.0514 sq. in.			P. B. 1. Area = 0.828 sq. in.			S. B. 1. Area = 0.846 sq. in.			P. B. 3. Area = 0.9025 sq. in.			P. B. 4. II. Area = 0.7598 sq. in.			S. B. 2. Area = 0.837 sq. in.		
	Loads per sq. in.	Elongations, inches.	E.	Loads per sq. in.	Elongations, inches.		Loads per sq. in.	Elongations, inches.	E.	Loads per sq. in.	Elongations, inches.	E.	Loads per sq. in.	Elongations, inches.	E.	Loads per sq. in.	Elongations, inches.	E.
500	476	0.0000		604	0.0000		591	0.0000		554	0.0000		658	0.0000		597	0.0000	
1,000																		
1,500	1,427	0.0004	23,777,819	1,812	0.0007	17,253,675	1,773	0.0005	23,640,661	1,662	0.0006	20,146,060	1,974	0.0007	18,801,511	1,792	0.0007	17,067,759
2,000																		
2,500	2,378	0.0013	17,172,869	3,020	0.0014	17,253,675	2,955	0.0011	21,670,604	2,770	0.0013	17,459,918	3,290	0.0018	15,383,177	2,987	0.0014	17,067,759
3,000																		
3,500	3,329	0.0017	19,374,519	4,228	0.0023	16,238,618	4,137	0.0018	20,508,776	3,878	0.0022	15,742,772	4,606	0.0031	13,630,160	4,181	0.0021	17,067,759
4,000																		
4,500	4,280	0.0025	17,701,265	5,436	0.0034	14,923,803	5,319	0.0026	18,858,150	4,986	0.0030	15,501,273	5,922	0.0046	12,416,202	5,376	0.0028	17,067,759
5,000																		
5,500	5,231	0.0033	16,538,794	6,644	0.0046	13,951,927	6,501	0.0033	18,463,757	6,094	0.0041	14,415,624	7,238	0.0062	11,631,163	6,571	0.0036	16,641,065
6,000																		
6,500	6,182	0.0040	16,046,883	7,852	0.0056	13,639,488	7,683	0.0041	17,848,999	7,202	0.0051	13,771,804	8,554	0.0079	10,946,098	7,766	0.0044	16,356,602
7,000																		
7,500	7,133	0.0048	15,832,886	9,060	0.0070	12,923,364	8,865	0.0049	17,409,886	8,310	0.0062	13,311,931	9,870	0.0102	10,218,014	8,960	0.0053	16,027,916
8,000																		
8,500	8,084	0.0063	14,313,869	10,268	0.0085	12,314,381	10,047	0.0059	16,711,192	9,418	0.0073	12,852,324	11,186	0.0127	9,598,955	10,155	0.0062	15,596,457
9,000																		
9,500	9,035	0.0070	14,132,495	11,476	0.0101	11,759,401	11,229	0.0069	16,236,888	10,526	0.0086	12,371,325	12,502	0.0155	9,045,518	11,350	0.0071	15,425,273
10,000																		
10,500	9,987	0.0080	13,670,359	12,684	0.0119	11,273,592	12,411	0.0079	15,795,232	11,634	0.0104	11,767,354	13,818	0.0192	8,501,551	12,544	0.0081	15,020,599
11,000																		
11,500	10,938	0.0091	14,160,164	13,892	0.0138	10,826,581	13,593	0.0088	15,490,434	12,742	0.0115	11,573,510				13,739	0.0092	14,689,502
12,000																		
12,500	11,889	0.0101	12,930,411	15,100	0.0160	10,381,839	14,775	0.0099	15,137,686	13,850	0.0133	11,136,686				14,934	0.0102	14,466,997
13,000																		
13,500	12,840	0.0114	12,506,860	16,308	0.0184	9,970,329	15,957	0.0111	14,700,653	14,958	0.0152	10,728,614				16,128	0.0112	14,223,884
14,000																		
14,500	13,791	0.0128	12,082,043	17,516	0.0212	9,566,257	17,129	0.0123	14,384,789	16,066	0.0171	10,378,838				17,323	0.0123	13,983,702
15,000																		
15,500	14,742	0.0142	11,746,257	18,724	0.0246	9,165,316	18,321	0.0136	14,031,974	17,174	0.0193	10,015,229				18,518	0.0136	13,688,653
16,000																		
16,500	15,693	0.0159	11,351,799				19,503	0.0148	13,770,617									
	Breaking load.....22,510			Breaking load.....18,010			Breaking load.....25,020			Breaking load.....22,750			Breaking load.....14,450			Breaking load.....19,420		
	Per sq. in.....21,409			Per sq. in.....21,756			Per sq. in.....29,574			Per sq. in.....25,207			Per sq. in.....19,016			Per sq. in.....23,201		

Loads applied.	P. A. 1. Area = 1.0568 sq. in.			S. A. 1. Area = 0.9683 sq. in.			S. A. 2. Area = 1.0302 sq. in.			P. A. 2. Area = 1.0323 sq. in.			S. A. 3. Area = 1.02 sq. in.			P. A. 3. Area = 1.027 sq. in.		
	Loads per sq. in.	Elongations, inches.	E.	Loads per sq. in.	Elongations, inches.	E.	Loads per sq. in.	Elongations, inches.	E.	Loads per sq. in.	Elongations, inches.	E.	Loads per sq. in.	Elongations, inches.	E.	Loads per sq. in.	Elongations, inches.	E.
500	473	0.0000		516	0.0000		485	0.0000		484	0.0000		490	0.0000		487	0.0000	
1,000										969	0.0002	24,224,845				974	0.0003	16,228,496
1,500										1,453	0.0004	24,224,845				1,461	0.0008	12,982,798
2,000										1,937	0.0007	21,533,186				1,947	0.0012	13,291,913
2,500	2,365	0.0014	14,002,664	2,582	0.0011	18,777,052				2,422	0.0010	20,187,357	2,451	0.0011	17,825,311	2,434	0.0015	13,446,471
3,000							2,912	0.0010	24,267,133	2,906	0.0014	18,918,435				2,921	0.0018	14,002,876
3,500										3,390	0.0016	18,995,337				3,408	0.0022	13,987,420
4,000										3,875	0.0019	18,558,841				3,895	0.0026	13,534,789
4,500	4,257	0.0027	14,271,942	4,647	0.0022	18,777,052				4,359	0.0024	17,611,059	4,412	0.0022	18,249,723	4,382	0.0030	13,581,708
5,000										4,844	0.0028	17,000,099				4,869	0.0034	13,425,004
5,500							5,339	0.0024	21,121,393	5,328	0.0032	16,511,331				5,355	0.0037	13,705,353
6,000										5,812	0.0036	16,111,430				5,842	0.0040	13,442,958
6,500	6,150	0.0044	13,115,313	6,713	0.0034	18,504,922				6,297	0.0040	15,778,180	6,373	0.0033	17,849,914	6,329	0.0044	13,336,992
7,000										6,781	0.0045	15,309,852				6,816	0.0048	13,247,329
7,500										7,265	0.0049	14,985,353				7,303	0.0053	12,996,599
8,000							7,766	0.0039	19,299,667	7,750	0.0054	14,704,101				7,790	0.0057	12,941,587
8,500	8,042	0.0062	12,536,999	8,778	0.0047	17,850,759				8,234	0.0058	14,458,006	8,333	0.0048	17,309,004	8,276	0.0062	12,741,304
9,000										8,718	0.0063	14,240,805				8,763	0.0067	12,628,227
9,500										9,203	0.0068	13,988,034				9,250	0.0073	12,377,451
10,000										9,687	0.0072	13,818,482				9,735	0.0077	12,366,604
10,500	9,934	0.0080	11,889,057	10,843	0.0061	17,129,539	10,192	0.0054	18,519,273	10,171	0.0077	13,612,055	10,294	0.0062	16,461,582	10,224	0.0083	12,153,986
11,000										10,656	0.0083	13,323,348				10,711	0.0087	12,154,814
11,500										11,140	0.0088	13,215,465				11,198	0.0093	11,971,152
12,000										11,624	0.0093	13,062,181				11,684	0.0097	11,979,857
12,500				12,909	0.0076	16,569,589				12,109	0.0098	12,921,669	12,255	0.0076	16,052,252	12,171	0.0103	11,818,791
13,000							12,619	0.0073	17,369,853							12,658	0.0111	11,589,466
13,500																13,145	0.0118	11,393,385
14,000																13,632	0.0124	11,299,258
14,500													14,216	0.0091	15,626,487			
15,000																		
15,500							15,045	0.0093	16,547,325									
16,000																		
16,500													16,177	0.0109	15,034,833			
	Breaking load..... 25,110			Breaking load 23,440			Breaking load 26,020			Breaking load 22,115			Breaking load 25,200			Breaking load 19,450		
	Per sq. in..... ..23,757			Per sq. in 24,204			Per sq. in.....25,258			Per sq. in.....21,423			Per sq. in.....24,706			Per sq. in.....18,938		

Loads applied.	P. A. 4. Area = 1.0514 sq. in.			P. B. 1. Area = 0.828 sq. in.			S. B. 1. Area = 0.846 sq. in.			P. B. 3. Area = 0.9025 sq. in.			P. B. 4. II. Area = 0.7598 sq. in.			S. B. 2. Area = 0.837 sq. in.		
	Loads per sq. in.	Elongations, inches.	E.	Loads per sq. in.	Elongations, inches.		Loads per sq. in.	Elongations, inches.	E.	Loads per sq. in.	Elongations, inches.	E.	Loads per sq. in.	Elongations, inches.	E.	Loads per sq. in.	Elongations, inches.	E.
500	476	0.0000		604	0.0000		591	0.0000		554	0.0000		658	0.0000		597	0.0000	
1,000																		
1,500	1,427	0.0004	23,777,819	1,812	0.0007	17,253,675	1,773	0.0005	23,640,661	1,662	0.0006	20,146,060	1,974	0.0007	18,801,511	1,792	0.0007	17,067,759
2,000																		
2,500	2,378	0.0013	17,172,869	3,020	0.0014	17,253,675	2,955	0.0011	21,670,604	2,770	0.0013	17,459,918	3,290	0.0018	15,383,177	2,987	0.0014	17,067,759
3,000																		
3,500	3,329	0.0017	19,374,519	4,228	0.0023	16,238,618	4,137	0.0018	20,508,776	3,878	0.0022	15,742,772	4,606	0.0031	13,630,160	4,181	0.0021	17,067,759
4,000																		
4,500	4,280	0.0025	17,701,265	5,436	0.0034	14,923,803	5,319	0.0026	18,958,150	4,986	0.0030	15,501,273	5,922	0.0046	12,416,202	5,376	0.0028	17,067,759
5,000																		
5,500	5,231	0.0033	16,538,794	6,644	0.0046	13,951,927	6,501	0.0033	18,463,757	6,094	0.0041	14,415,624	7,238	0.0062	11,631,163	6,571	0.0036	16,641,065
6,000																		
6,500	6,182	0.0040	16,046,883	7,852	0.0056	13,639,488	7,683	0.0041	17,848,999	7,202	0.0051	13,771,804	8,554	0.0079	10,946,098	7,766	0.0044	16,356,602
7,000																		
7,500	7,133	0.0048	15,852,886	9,060	0.0070	12,923,364	8,865	0.0049	17,409,886	8,310	0.0062	13,311,931	9,870	0.0102	10,218,014	8,960	0.0053	16,027,916
8,000																		
8,500	8,084	0.0063	14,313,869	10,268	0.0085	12,314,381	10,047	0.0059	16,711,192	9,418	0.0073	12,852,324	11,186	0.0127	9,598,955	10,155	0.0062	15,596,457
9,000																		
9,500	9,035	0.0070	14,132,495	11,476	0.0101	11,759,401	11,229	0.0069	16,236,888	10,526	0.0086	12,371,325	12,502	0.0155	9,045,518	11,350	0.0071	15,425,273
10,000																		
10,500	9,987	0.0080	13,670,359	12,684	0.0119	11,273,592	12,411	0.0079	15,795,232	11,634	0.0104	11,767,354	13,818	0.0192	8,501,551	12,544	0.0081	15,020,599
11,000																		
11,500	10,938	0.0091	14,160,164	13,892	0.0138	10,826,581	13,593	0.0088	15,490,434	12,742	0.0115	11,573,510				13,739	0.0092	14,689,502
12,000																		
12,500	11,889	0.0101	12,930,411	15,100	0.0160	10,381,839	14,775	0.0099	15,137,686	13,850	0.0133	11,136,686				14,934	0.0102	14,466,997
13,000																		
13,500	12,840	0.0114	12,506,860	16,308	0.0184	9,970,329	15,957	0.0111	14,700,653	14,958	0.0152	10,728,614				16,128	0.0112	14,223,884
14,000																		
14,500	13,791	0.0128	12,082,043	17,516	0.0212	9,566,257	17,129	0.0123	14,384,789	16,066	0.0171	10,378,838				17,323	0.0123	13,983,702
15,000																		
15,500	14,742	0.0142	11,746,257	18,724	0.0246	9,165,316	18,321	0.0136	14,031,974	17,174	0.0193	10,015,229				18,518	0.0136	13,688,653
16,000																		
16,500	15,693	0.0159	11,351,799				19,503	0.0148	13,770,617									
	Breaking load.....22,510			Breaking load.....18,010			Breaking load.....25,020			Breaking load.....22,750			Breaking load.....14,450			Breaking load.....19,420		
	Per sq. in.....21,409			Per sq. in.....21,756			Per sq. in.....29,574			Per sq. in.....25,207			Per sq. in.....19,016			Per sq. in.....23,201		

Loads applied.	P. A. 1. Area = 1.0568 sq. in.			S. A. 1. Area = 0.9683 sq. in.			S. A. 2. Area = 1.0302 sq. in.			P. A. 2. Area = 1.0323 sq. in.			S. A. 3. Area = 1.02 sq. in.			P. A. 3. Area = 1.027 sq. in.		
	Loads per sq. in.	Elongations, inches.	E.	Loads per sq. in.	Elongations, inches.	E.	Loads per sq. in.	Elongations, inches.	E.	Loads per sq. in.	Elongations, inches.	E.	Loads per sq. in.	Elongations, inches.	E.	Loads per sq. in.	Elongations, inches.	E.
500	473	0.0000		516	0.0000		485	0.0000		484	0.0000		490	0.0000		487	0.0000	
1,000										969	0.0002	24,224,845				974	0.0003	16,228,496
1,500										1,453	0.0004	24,224,845				1,461	0.0008	12,982,798
2,000										1,937	0.0007	21,533,186				1,947	0.0012	13,291,913
2,500	2,365	0.0014	14,002,664	2,582	0.0011	18,777,052				2,422	0.0010	20,187,357	2,451	0.0011	17,825,311	2,434	0.0015	13,446,471
3,000							2,912	0.0010	24,267,133	2,906	0.0014	18,918,435				2,921	0.0018	14,002,876
3,500										3,390	0.0016	18,995,337				3,408	0.0022	13,987,420
4,000										3,875	0.0019	18,588,841				3,895	0.0026	13,534,789
4,500	4,257	0.0027	14,271,942	4,647	0.0022	18,777,052				4,359	0.0024	17,611,059	4,412	0.0022	18,249,723	4,382	0.0030	13,581,708
5,000										4,844	0.0028	17,000,099				4,869	0.0034	13,425,004
5,500							5,339	0.0024	21,121,393	5,328	0.0032	16,511,331				5,355	0.0037	13,705,353
6,000										5,812	0.0036	16,111,430				5,842	0.0040	13,442,958
6,500	6,150	0.0044	13,115,313	6,713	0.0034	18,504,922				6,297	0.0040	15,778,180	6,373	0.0033	17,849,914	6,329	0.0044	13,336,992
7,000										6,781	0.0045	15,309,852				6,816	0.0048	13,247,329
7,500										7,265	0.0049	14,985,353				7,303	0.0053	12,996,599
8,000							7,766	0.0039	19,299,667	7,750	0.0054	14,704,101				7,790	0.0057	12,941,587
8,500	8,042	0.0062	12,536,999	8,778	0.0047	17,850,759				8,234	0.0058	14,458,006	8,333	0.0048	17,309,004	8,276	0.0062	12,741,304
9,000										8,718	0.0063	14,240,805				8,763	0.0067	12,628,227
9,500										9,203	0.0068	13,988,034				9,250	0.0073	12,377,451
10,000										9,687	0.0072	13,818,482				9,735	0.0077	12,366,604
10,500	9,924	0.0080	11,889,057	10,843	0.0061	17,129,589	10,192	0.0054	18,519,273	10,171	0.0077	13,612,055	10,294	0.0062	16,461,582	10,224	0.0083	12,153,986
11,000										10,656	0.0083	13,333,348				10,711	0.0087	12,154,814
11,500										11,140	0.0088	13,215,465				11,198	0.0093	11,971,152
12,000										11,624	0.0093	13,062,181				11,684	0.0097	11,979,857
12,500				12,909	0.0076	16,569,589				12,109	0.0098	12,921,669	12,255	0.0076	16,052,252	12,171	0.0103	11,818,791
13,000							12,619	0.0073	17,369,853							12,658	0.0111	11,589,466
13,500																13,145	0.0118	11,393,385
14,000																13,632	0.0124	11,299,258
14,500													14,216	0.0091	15,626,487			
15,000																		
15,500							15,045	0.0093	16,547,325									
16,000																		
16,500													16,177	0.0109	15,034,833			
	Breaking load..... 25,110			Breaking load 23,440			Breaking load 26,020			Breaking load 22,115			Breaking load 25,200			Breaking load 19,450		
	Per sq. in..... ..23,757			Per sq. in 24,204			Per sq. in.....25,258			Per sq. in.....21,423			Per sq. in.....24,706			Per sq. in.....18,938		

Loads applied.	P. A. 4. Area = 1.0514 sq. in.			P. B. 1. Area = 0.828 sq. in.			S. B. 1. Area = 0.846 sq. in.			P. B. 3. Area = 0.9025 sq. in.			P. B. 4. II. Area = 0.7598 sq. in.			S. B. 2. Area = 0.837 sq. in.		
	Loads per sq. in.	Elongations, inches.	E.	Loads per sq. in.	Elongations, inches.		Loads per sq. in.	Elongations, inches.	E.	Loads per sq. in.	Elongations, inches.	E.	Loads per sq. in.	Elongations, inches.	E.	Loads per sq. in.	Elongations, inches.	E.
500	476	0.0000		604	0.0000		591	0.0000		554	0.0000		658	0.0000		597	0.0000	
1,000																		
1,500	1,427	0.0004	23,777,819	1,812	0.0007	17,253,675	1,773	0.0005	23,640,661	1,662	0.0006	20,146,060	1,974	0.0007	18,801,511	1,792	0.0007	17,067,759
2,000																		
2,500	2,378	0.0013	17,172,869	3,020	0.0014	17,253,675	2,955	0.0011	21,670,604	2,770	0.0013	17,459,918	3,290	0.0018	15,383,177	2,987	0.0014	17,067,759
3,000																		
3,500	3,329	0.0017	19,374,519	4,228	0.0023	16,238,618	4,137	0.0018	20,508,776	3,878	0.0022	15,742,772	4,606	0.0031	13,630,160	4,181	0.0021	17,067,759
4,000																		
4,500	4,280	0.0025	17,701,265	5,436	0.0034	14,923,803	5,319	0.0026	18,258.150	4,986	0.0030	15,501,273	5,922	0.0046	12,416,202	5,376	0.0028	17,067,759
5,000																		
5,500	5,231	0.0033	16,538,794	6,644	0.0046	13,951,927	6,501	0.0033	18,463,757	6,094	0.0041	14,415,624	7,238	0.0062	11.631,163	6,571	0.0036	16,641,065
6,000																		
6,500	6,182	0.0040	16,046,883	7,852	0.0056	13,639,488	7,683	0.0041	17,848,999	7,202	0.0051	13,771,804	8,554	0.0079	10,946,098	7,766	0.0044	16,356,602
7,000																		
7,500	7,133	0.0048	15,852,886	9,060	0.0070	12.923,964	8,865	0.0049	17,409,886	8,310	0.0062	13,311,931	9.870	0.0102	10,218,014	8,960	0.0053	16,027,916
8,000																		
8,500	8,084	0.0063	14,313,869	10,268	0.0085	12,314,381	10,047	0.0059	16,711,192	9,418	0.0073	12,852,324	11,186	0.0127	9,598,955	10,155	0.0062	15,596,457
9,000																		
9,500	9,035	0.0070	14,132,495	11,476	0.0101	11,759,401	11,229	0.0069	16,236,888	10,526	0.0086	12,371,325	12,502	0.0155	9,045,518	11,350	0.0071	15,425,273
10,000																		
10,500	9,987	0.0080	13,670,359	12,684	0.0119	11.273,592	12,411	0.0079	15,795,232	11,634	0.0104	11,767,354	13,818	0.0192	8,501,551	12,544	0.0081	15,020,599
11,000																		
11,500	10,938	0.0091	14,160,164	13,892	0.0138	10,826,581	13,593	0.0088	15,490,434	12,742	0.0115	11,573,510				13,739	0.0092	14,689,502
12,000																		
12,500	11,889	0.0101	12,930,411	15,100	0.0160	10,381,839	14,775	0.0099	15,137,686	13,850	0.0133	11,136,686				14,934	0.0102	14,460,997
13,000																		
13,500	12,840	0.0114	12,506,860	16,308	0.0184	9,970,329	15,957	0.0111	14,700,653	14,958	0.0152	10,728,614				16,128	0.0112	14,223,884
14,000																		
14,500	13,791	0.0128	12,082,043	17,516	0.0212	9,566,257	17,139	0.0123	14,384,789	16,066	0.0171	10,378,838				17,323	0.0123	13,983,702
15,000																		
15,500	14,742	0.0142	11,746,257	18,724	0.0246	9,165,316	18,321	0.0136	14,031,974	17,174	0.0193	10,015,229				18,518	0.0136	13,688,653
16,000																		
16,500	15,693	0.0159	11,351,799				19,503	0.0148	13,770,617									
	Breaking load.....22,510			Breaking load.....18,010			Breaking load.....25,020			Breaking load.....22,750			Breaking load.....14,450			Breaking load.....19,420		
	Per sq. in.....21,409			Per sq. in.....21,756			Per sq. in.....29,574			Per sq. in.....25,207			Per sq. in.....19,016			Per sq. in.... 23,201		

Loads applied.	S. B. 3 II. Area = 0.8432 sq. in.			S. B. 4 IV. Area = 1.3478 sq. in.			P. B. 5 I. Area = 0.8778 sq. in.			P. B. 6 I. Area = 0.9664 sq. in.			S. B. 4 II. Area = 0.837 sq. in.			P. B. 7 II. Area = 0.7442 sq. in.		
	Loads per sq. in.	Elongations, inches.	E.	Loads per sq. in.	Elongations, inches.	E.	Loads per sq. in.	Elongations, inches.	E.	Loads per sq. in.	Elongations, inches.	E.	Loads per sq. in.	Elongations, inches.	E.	Loads per sq. in.	Elongations, inches.	E.
500	593	0.0000		371	0.0000		570	0.0000		517	0.0000		597	0.0000		672	0.0000	
1,000																		
1,500	1,779	0.0006	21,562,876	1,113	0.0003	24,731,657	1,709	0.0008	15,189,486	1,552	0.0006	18,814,000	1,792	0.0005	26,549,859	2,016	0.0011	12,797,378
2,000																		
2,500	2,965	0.0013	19,252,569	1,855	0.0008	19,785,329	2,848	0.0018	13,290,801	2,587	0.0014	15,874,302	2,987	0.0011	23,231,120	3,359	0.0022	12,506,529
3,000																		
3,500	4,151	0.0020	18,482,466	2,597	0.0013	18,686,143	3,987	0.0030	12,025,010	3,621	0.0023	14,213,634	4,181	0.0019	21,278,919	4,703	0.0034	11,920,952
4,000																		
4,500	5,337	0.0029	16,982,792	3,339	0.0019	17,106,065	5,126	0.0042	11,297,183	4,656	0.0034	13,123,959	5,376	0.0028	19,473,140	6,047	0.0050	11,040,284
5,000																		
5,500	6,523	0.0038	16,376,724	4,081	0.0023	16,982,416	6,266	0.0056	10,725,467	5,691	0.0045	12,298,765	6,571	0.0036	18,389,673	7,390	0.0066	10,511,883
6,000																		
6,500	7,709	0.0046	16,118,016	4,823	0.0029	16,400,339	7,405	0.0072	10,088,608	6,726	0.0058	11,575,596	7,766	0.0046	17,420,768	8,734	0.0086	9,879,673
7,000																		
7,500	9,995	0.0056	15,509,668	5,565	0.0034	16,177,290	8,544	0.0091	9,503,927	7,760	0.0072	11,016,932	8,960	0.0055	16,728,693	10,078	0.0109	9,321,449
8,000																		
8,500	11,181	0.0065	15,131,431	6,307	0.0039	15,841,378	9,683	0.0112	8,994,039	8,795	0.0086	10,531,857	10,155	0.0065	16,131,035	11,421	0.0136	8,778,363
9,000																		
9,500	12,367	0.0075	14,767,892	7,049	0.0045	15,580,115	10,822	0.0134	8,570,061	9,830	0.0102	10,080,240	11,350	0.0076	15,602,976	12,765	0.0167	8,276,966
10,000																		
10,500	13,553	0.0088	14,239,870	7,790	0.0052	15,082,032	11,962	0.0161	8,134,985	10,864	0.0121	9,631,550	12,544	0.0087	15,128,808	14,109	0.0210	7,765,440
11,000																		
11,500	14,739	0.0100	13,807,851	8,532	0.0059	14,674,509				11,899	0.0141	9,214,832	13,739	0.0099	14,658,571	15,453	0.0256	7,322,194
12,000																		
12,500	15,925	0.0113	13,417,566	9,274	0.0064	14,575,799				12,934	0.0164	8,821,845	14,934	0.0113	14,148,180	16,796	0.0320	6,886,975
13,000																		
13,500				10,016	0.0071	14,332,631				13,968	0.0191	8,443,610	16,138	0.0127	13,716,305			
14,000																		
14,500				10,758	0.0078	14,065,963				15,003	0.0222	8,078,921	17,333	0.0141	13,325,112			
15,000																		
15,500				11,500	0.0085	13,834,918				16,038	0.0262	7,712,788	18,528	0.0159	12,905,298			
16,000																		
16,500				12,242	0.0092	13,588,527												
	Breaking load.....20,830 Per sq. in.....24,704			Breaking load.....34,760 Per sq. in.....25,790			Breaking load.....17,250 Per sq. in.....19,651			Breaking load.....20,020 Per sq. in.....20,715			Breaking load.....24,620 Per sq. in.....29,414			Breaking load.....14,420 Per sq. in.....19,376		

Designation of Specimen.	Area sq. in.	Breaking weight.	Breaking wt. per sq. in.	Remarks.
P. B. 2. III.	0.96	10,170	10,594	Broke at a flaw at 10,170 lbs. re-tested and broke at a flaw at 12,240 lbs.
P. B. 8. IV.	1.2276	24,080	19,616	Broke at a slight flaw.
P. B. 9. I.	0.9513	20,050	21,076	
S. B. 5. II.	0.8001	18,890	23,610	
P. B. 10. I.	0.9338	20,050	21,483	
P. B. 11. II.	0.741	16,410	22,146	
S. B. 6. I.	0 8512	24,790	29,124	
P. B. 12. II.	0.725	14,900	20,552	
S. B. 7. I.	0.8385	23,590	28,372	
S. B. 8. I.	0.8645	21,980	25,425	
P. B. 13. III.	0.8624	13,920	16,141	
S. B. 9. III.	1.1063	30,550	27,523	
S. B. 10. III.	1.3275	24,340	18,301	

The following is a summary of the breaking weights of the specimens not cut from the lintels:

P. A. 1	23,757	S. A. 1	24,204
P. A. 2	21,423	S. A. 2	25,258
P. A. 3	18,938	S. A. 3	24,706
P. A. 4	21,409		
	4)85,527		3)74,168
	21,382		24,723
P. B. 1	21,756	S. B. 1	29,574
P. B. 3	25,207	S. B. 2	23,201
	2)46,963		2)52,775
	23,482		26,388

The conclusions which Messrs. Burgess and Vielé draw from these tests are the following, viz.:

1°. The tensile strength of the iron marked *S* was higher than that of the iron marked *P*.

2°. The elongations for a certain load were greater for equal areas with the grade *P* than with the grade *S*.

3°. Hence *S* was a stronger, but, at the same time, a more brittle iron.

4°. With the same grade of iron, the elongations were greater in planed than in unplaned specimens.

5°. The unplaned specimens in these tests had a less tensile strength per square inch than the planed. They attribute this fact to some slight irregularities in the castings, which were removed by planing.

6°. In regard to the tensile specimens cut from the lintels, it will

be seen that specimens marked I. and II. broke at higher loads than those marked IV., and that the weakest of all were those marked III.

TESTS OF THE TRANSVERSE STRENGTH OF WINDOW LINTELS.

All the window lintels tested were of the form shown in the cut (Fig. 31), and all were supported at the ends and loaded in the middle, the span in every case being 52″. From the cut it will be seen that the web varied in height, being 4 inches high above the flange in the centre, and decreasing to 2.5 inches at the ends over the supports. Inasmuch as the section, and hence the moment of inertia of the section varied, it became necessary to deduce a special approximate formula suitable to determine the modulus of elasticity from the observed deflections.

In order to deduce this special formula, the moments of inertia were first determined at the following five sections, viz.:

Distance of section from support, inches.	Moment of inertia of section about neutral axis.
26	15.5625
19½	12.2072
13	9.3600
6½	6.9773
0	5.0300

These five values satisfy very nearly the equation:

$$I = \frac{1.8725}{338} x^2 + \frac{6.7875}{26} x + 5.03.$$

Hence this was used for I in the general deflection equation:

$$\frac{d^2 v}{dx^2} = \frac{M}{EI},$$

and hence was deduced:

$$E = \frac{321.695\, W}{v},$$

where W = load applied, and v = resulting deflection.

A perusal of the results will show that the P's which in tension bore the least were in every case the ones which in the form of lintels stood the most. On the whole, the tensile and the compressive moduli of rupture compare very well with the tensile and the compressive strength of the iron respectively.

The results of the separate tests are given in the following tables:

Loads applied.	S. 1. Span 52″. Wt. of lintel 119 lbs.		S. 2. Span 52″. Wt. of lintel, 116 lbs.		P. 1. Span 52″. Wt. of lintel, 119 lbs.		S. 3. Span 52″. Wt. of lintel, 117 lbs.	
	Deflect. Inches.	E.	Deflect. Inches.	E.	Deflect. Inches.	E.	Deflect. Inches.	E.
500	0.0000		0.0000					
1,500			0.0147	21,958,707				
2,500	0.0271	23,785,209	0.0286	22,551,118	0.0331	19,467,170	0.0291	22,109,622
3,500			0.0441	21,952,252				
4,500	0.0557	23,121,053	0.0600	21,522,288	0.0693	18,607,930	0.0598	21,533,476
5,500			0.0759	21,264,309				
6,500	0.0853	22,659,404	0.0923	20,979,580	0.1084	17,890,286	0.0907	21,296,211
7,500			0.1072	21,077,206				
8,500	0.1055	22,320,629	0.1244	20,773,681	0.1484	17,443,935	0.1216	21,177,579
9,500			0.1412	20,593,107				
10,500	0.1353	22,034,361	0.1587	20,377,321	0.1937	16,795,722	0.1557	20,715,611
11,500			0.1760	20,210,429				
12,500	0.1684	21,707,729	0.1938	20,036,531	0.2400	16,309,955	0.1899	20,398,439
13,500			0.2122	19,840,139				
14,500	0.2026	21,290,212	0.2331	19,519,799	0.2927	15,724,039	0.2270	19,961,812
15,500								
16,500							0.2659	19,534,035
	Breaking load..... 26,750 Tensile modulus of rupture..... 26,198 Compr. modulus of rupture..... 80,164		Breaking load..... 19,850 Tensile modulus of rupture..... 19,433 Compr. modulus of rupture..... 59,490		Breaking load..... 27,220 Tensile modulus of rupture..... 26,648 Compr. modulus of rupture..... 81,578		Breaking load... ... 28,670 Tensile modulus of rupture..... 28,068 Compr. modulus of rupture..... 85.924	

Loads applied.	S. 4. Span 52″. Weight of lintel, 118 lbs.		P. 2. Span 52″. Weight of lintel, 120 lbs.		P. 3. Span 52″. Weight of lintel, 119 lbs.	
	Deflect. Inches.	E	Deflect. Inches.	E.	Deflect. Inches.	E.
500	0.0000		0.0000		0.0000	
1,500			0.0149	21,590,272		
2,500	0.0287	22,456,900	0.0307	20,975,359	0.0347	18,541,496
3,500			0.0477	20,291,319		
4,500	0 0588	21,898,268	0.0659	19,637,378	0.0724	17,815,104
5,500			0.0846	19,355.172		
6,500	0.0899	21,712,057	0.1022	19,167,035	0.1150	16,952,791
7,500			0.1204	18,953.963		
8,500	0.1210	21,447,685	0.1403	18,610,508	0.1572	16,521,625
9,500			0.1601	18,343,378		
10,500	0.1544	21,016,559	0.1807	18,070,663	0.2024	16,067,318
11,500			0.2016	17.827,158		
12,500	0.1864	20,844,894	0.2251	17,484,756	0.2522	15,540,516
13,500			0.2492	17,166,571		
14,500	0.2202	20,602,958	0.2730	16,905.859	0 3092	14,932,924
15,500			0.2989	16,605,250		
16,500	0.2637	19,876,418			0.3756	14,277,531
	Breaking load. 25,120 Tensile modulus of rupture ..... 24,592 Compr. modulus of rupture..... 75,285		Breaking load. 30,520 Tensile modulus of rupture..... 29,879 Compr. modulus of rupture..... 91,467		Break'g load. 27,200 Tensile modulus of rupture..... 26,659 Compr. modulus of rupture..... 81,608	

SUMMARY OF THE EXPERIMENTS OF MESSRS. EASTMAN AND GERRISH.

The object of this thesis was to determine the constants suitable to use in the formulæ for determining the strength of the arms of cast iron pulleys; and also, incidentally, to determine the holding power of keys and set screws.

Some old pulleys which had been in use at the shops were employed for these tests. They were all about fifteen inches in diameter, and were bored for a shaft $1\frac{3}{16}$ inches in diameter.

Inasmuch as this size of shaft would not bear the strain neces-

Fig: 32

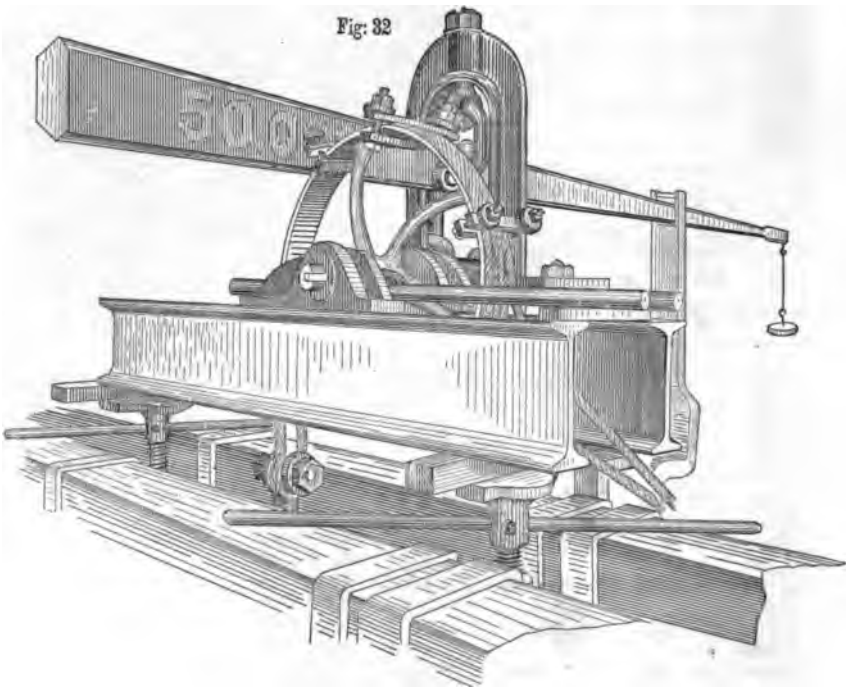

sary to break the arms, the hubs were bored out to a diameter of $1\frac{11}{16}$ inches diameter, and key-seated for a key one-half an inch square.

In order to strengthen the hubs sufficiently, two wrought iron rings were shrunk on them, so as to make it a test of the arms and not of the hub.

The machine used for applying the stress is shown in the cut (Fig. 32).

The pulley under test is keyed to a shaft which, in its turn, is keyed to a pair of castings supported by two wrought iron *I* beams, resting upon a pair of jackscrews, by means of which the strain is

applied. A wire rope is wound around the rim of the pulley, and leaves it in a tangential direction vertically. This rope is connected with the weighing lever of the machine, and weighs the load applied.

The idea of the arrangement was to get a pull upon the rim of the pulley as nearly as possible like the belt pull, to which it is subjected in practice, and at the same time to have some means of weighing this pull. In practice there are two pulls upon the rim, that of the tight side, and that of the loose side of the belt, the sum of the two tending to produce a bending of the shaft and a compression of the rim and arms of the pulley, while the difference of the two causes a rotation of the pulley and a bending moment in all the arms. It will be seen in the arrangement used that while there is no tight side and loose side of a belt, yet there is a compression of both rim and arms, which must be very similar to that caused by a belt, and a bending moment in the arms such as occurs in practice.

In a number of the experiments one arm gave way first, and then the unsupported part of the rim broke.

The breaking load of the separate pulleys was, of course, determined, and then it was sought to compute from this the modulus of rupture of the cast iron, if so it can be called.

The method commonly given for computing the strength of pulley arms is to consider them in one of two ways, viz., either as beams fixed in direction at one end and loaded at the other, or else to consider them as fixed in direction at both ends, thus making of each arm a pair of cantilevers, half as long as the arm, fixed at one end and loaded at the other.

If we let

I = moment of inertia of section,

n = number of arms,

y = half depth of each arm = distance from neutral axis to outside fibre,

x = length of each arm in a radial direction,

P = breaking load determined by experiment:

Then we should have, for the outside fiber stress at fracture,

$$f = \frac{Pxy}{nI} \tag{1}$$

if we adopt the first assumption; or,

$$f = \frac{Pxy}{2nI} \tag{2}$$

if we adopt the second assumption.

Number of test.	Diam. of pulley.	Face.	Thickness of rim.	Width of hub.	Thickness of hub.	Length of arms.	Number of arms.	Dimensions of arms, all elliptic. at rim.	Dimensions of arms, all elliptic. at hub.	Breaking weight.	$r_1 = \frac{Pxy}{nI}$	$r_2 = \frac{Pxy}{2nI}$	Place and Manner of Fracture.	Remarks.
1	14	4	$\frac{1}{4}$	$4\frac{1}{4}$	$\frac{3}{4}$	$4\frac{1}{4}$	5	$1\frac{1}{8} \times \frac{9}{16}$	$1\frac{7}{8} \times \frac{11}{32}$	5,600			Hub cracked.	Not a test of the arms.
2	15	$3\frac{1}{2}$	$\frac{5}{16}$	$3\frac{5}{16}$	$1\frac{3}{16}$	5	5	$1\frac{3}{8} \times \frac{11}{16}$	$1\frac{1}{2} \times \frac{13}{16}$	5,300			Hub cracked.	Not a test of the arms.
3	$12\frac{1}{2}$	$3\frac{3}{16}$	$\frac{5}{16}$	$3\frac{1}{4}$	$\frac{3}{4}$	$4\frac{1}{4}$	6	$2 \times \frac{7}{16}$	$2 \times \frac{7}{16}$	2,200	24,425	12,212	All the arms broke at the hub.	
4	$12\frac{1}{2}$	$3\frac{3}{16}$	$\frac{5}{16}$	$3\frac{1}{4}$	$\frac{3}{4}$	$4\frac{1}{4}$	6	$2 \times \frac{7}{16}$	$2 \times \frac{7}{16}$	2,100	23,314	11,657	All the arms broke at the hub.	
5	12	3	$\frac{1}{4}$	$3\frac{1}{8}$	$\frac{11}{16}$	$3\frac{1}{2}$	5	$1\frac{5}{16} \times \frac{1}{2}$	$1\frac{5}{8} \times \frac{9}{16}$	6,700	32,160	16,080	One arm broke at rim and hub.	Load subsequently increased to 8,000 when the rim broke.
6	$14\frac{3}{4}$	$3\frac{1}{4}$	$\frac{5}{16}$	$3\frac{3}{4}$	$\frac{17}{32}$	5	6	$1 \times \frac{9}{16}$	$1\frac{1}{4} \times \frac{5}{8}$	4,400	38,245	19,122	All the arms broke at the hub.	
7	15	$3\frac{7}{16}$	$\frac{1}{4}$	4	$\frac{9}{16}$	5	5	$1\frac{5}{16} \times \frac{3}{4}$	$1\frac{1}{2} \times \frac{27}{32}$	4,300	23,060	11,530	One arm broke at the hub.	Load subsequently increased to 5,300 when the rim broke.
8	24	$3\frac{1}{16}$	$\frac{5}{16}$	$3\frac{1}{4}$	$\frac{5}{8}$	$9\frac{5}{8}$	5	$1\frac{1}{8} \times \frac{11}{16}$	$1\frac{9}{16} \times \frac{3}{4}$	2,000	21,430	10,715	One arm broke at the hub.	Load subsequently increased to 2,200 when the rim broke.
9	14	4	$\frac{5}{16}$	$4\frac{1}{4}$	$1\frac{5}{32}$	4	5	$1\frac{11}{16} \times \frac{1}{2}$	$1\frac{7}{16} \times \frac{5}{8}$					One of the arms was broken in driving it on to the shaft, so no test was made.
10	$13\frac{1}{2}$	$4\frac{1}{4}$	$\frac{5}{16}$	$4\frac{1}{4}$	$1\frac{1}{32}$	$4\frac{1}{2}$	5	$1\frac{7}{16} \times \frac{3}{4}$	$1\frac{11}{16} \times \frac{25}{32}$					There was a bushing inside the hub keyed to shaft, pulley slipped on bushing, hence no test.
11	15	$3\frac{7}{16}$	$\frac{5}{16}$	4	$\frac{9}{16}$	5	5	$1\frac{5}{16} \times \frac{3}{4}$	$1\frac{1}{2} \times \frac{27}{32}$	4,300	23,060	11,530		One arm broke at the hub during test of keys.
12	$19\frac{3}{4}$	4	$\frac{1}{4}$	$4\frac{1}{4}$	$\frac{3}{4}$	$7\frac{1}{8}$	5	$1\frac{5}{8} \times \frac{25}{32}$	$1\frac{15}{16} \times \frac{27}{32}$					This pulley was the one used in testing set screws and also some of the keys and one of the arms broke during a key test.
Average.											26,528	13,264		

These formulæ are both based upon the assumption of arms of uniform section, either straight or else symmetrical with respect to hub and rim.

Other formulæ might be deduced which assume a variable section, but it would not seem to be worth while, in view of the fact that the bending moment is probably unequally divided among the arms. Hence the students confined themselves to computing the values of f from each of the above formulæ, thus obtaining average values of the constants to be used in these formulæ for the purpose of determining approximately the strength of the pulleys. (See table of the results on previous page.)

CONCLUSIONS FROM THESE TESTS.

1st. A low value of the modulus of rupture of cast iron should be used in the ordinary formulæ for designing pulley arms, due to the fact that a load at the rim acts more upon some arms than upon others, as shown by the fact that, in four out of eight of the tests, one arm broke first, and this one always occupied the same position.

2d. In every case but one, of these four, a greater load than the original was afterwards put upon the pulley, and no other arm broke, but the rim gave way by crushing. In this one case excepted, the arms afterwards stood a greater load proportional to their number before breaking.

3d. In the tests on the single arms to be described next, the modulus of rupture rose as high as 55,000 lbs. in some cases, and in no case went below 35,000 lbs.

TESTS OF THE SEPARATE ARMS.

In the cases of numbers, 5, 7, 8, 9 and 10, some of the arms were not broken, the rims were now broken off, and the remaining arms were tested separately, the pull being exerted by a yoke hung over the end of the arm, the lower end being attached to the link of the machine.

The arms were always placed so that the direction of the pull was tangent to the curve of the rim at the end of the arm. The actual outside fiber stress at fracture was then determined by calculation from the experimental results, and is recorded in the following table:

Number of Arm.	Dimensions of section at fracture: all elliptical.	Bend of arm with or against load.	Actual outside fiber stress at fracture.	Average modulus of rupture for each pulley.
5 — 1	$1\frac{9}{16} \times \frac{17}{32}$	against	45,396	45,396
7 — 1	$1\frac{1}{2} \times \frac{7}{8}$	against	36,802	
7 — 2	$1\frac{15}{32} \times \frac{7}{8}$	against	39,537	
7 — 3	$1\frac{17}{32} \times \frac{7}{8}$	with	46,407	40,915
8 — 1	$1\frac{15}{32} \times \frac{13}{16}$	against	35,503	
8 — 2	$1\frac{1}{32} \times \frac{25}{32}$	against	36,091	
8 — 3	$1\frac{11}{32} \times \frac{13}{16}$	with	39,939	
8 — 4	$1\frac{3}{32} \times \frac{13}{16}$	with	42,469	38,500
9 — 1	$1\frac{7}{16} \times \frac{5}{8}$	against	41,899	
9 — 2	$1\frac{7}{16} \times \frac{21}{32}$	against	44,148	
9 — 3	$1\frac{7}{16} \times \frac{5}{8}$	with	55,442	47,163
10 — 1	$1\frac{3}{4} \times \frac{13}{16}$	against	54,743	
10 — 2	$1\frac{15}{64} \times \frac{13}{16}$	against	50,943	
10 — 3	$1\frac{3}{16} \times \frac{13}{16}$	against	38,605	
10 — 4	$1\frac{7}{8} \times \frac{13}{16}$	with	55,229	49,880

Total..... 663,153
Average.....44,210

In order to show how the results in the preceding table were deduced from the experiments, the calculation will now be given in full for the first, or 5–1 (Fig. 33).

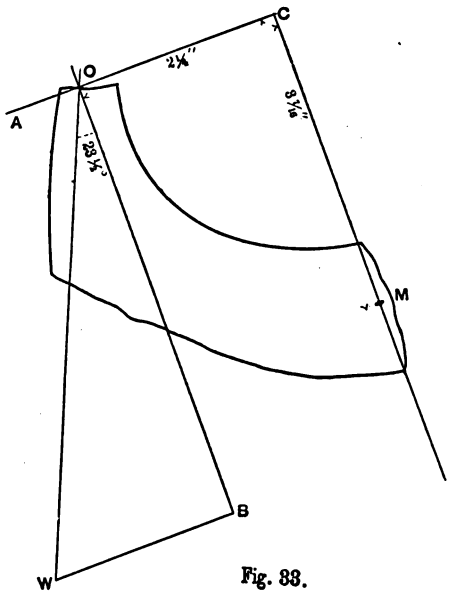

Fig. 33.

The force OW, which is equal to the load upon the arm, is resolved into two components, OB and BW. Both these compo-

nents act on the arm at the point O, OB in the direction OB, and BW in the direction OA.

The first, OB acts as a pull at the end of a cantilever of length OC, and is calculated accordingly; the second, BW acts as a pull in the direction OA, and produces stresses similar to those acting in a hook, where the distance from the line of pull to the center of the most strained section is CM.

The formula used for the cantilever is $f = \frac{My}{I}$, where M equals the pull times the length of the arm, y equals half the depth and I equals the moment of inertia of the section.

$$\frac{y}{I} = \frac{32}{\pi bh^2}$$

The formula used to determine the greatest tension due to the force BW is

$$f_2 = \frac{P}{A} + \frac{Pny}{I}$$

where P equals the pull, A equals the area of the section $= \frac{\pi bh}{4}$, n equals the distance CM, and y equals the half depth.

The sum of f_1 and f_2 gives us the greatest fiber stress at fracture, or the modulus of rupture of the iron of the arm. The breaking load of this arm was 1645 lbs. Hence:

$OW = 1645.$

$OB = OW \cos 23\frac{1}{2}^\circ = 1508.$

$BW = OW \sin 23\frac{1}{2}^\circ = 655.$

$$\therefore f_1 = \frac{(1508)(2.25)(32)}{\pi(0.5312)(1.5625)^2} = 26671.$$

Also,

$$f_2 = \frac{(655)(4)}{\pi(0.5312)(1.562)} + \frac{(655)(3.437)(32)}{\pi(0.5312)(1.562)^2} = 18725.$$

Hence $f_1 + f_2 = 45396$, as recorded in the table.

The other values are similarly calculated.

An inspection of the table will show that the modulus of rupture figures out higher when the bend of the arm is with the load than when it is against it, and the value will be found to be very much higher than the values of f derived for the pulleys with the rims on.

TESTS OF THE HOLDING POWER OF SET SCREWS.

These tests were all made by using pulley No. 12, the pulley being fastened to the shaft by two set screws and the shaft keyed to the holders; then the load required at the rim of the pulley to cause it to slip was determined, and this being multiplied by

$$\frac{9\frac{7}{8} + \frac{5}{16}}{\frac{27}{32} \times 2} = 6.037,$$

gives the holding power of the set screws.

The number 6.037 is obtained by adding to the radius of the pulley one-half the diameter of the wire rope, and dividing the sum by twice the radius of the shaft, since there were two set screws in action at a time. The set screws used were of wrought iron, $\frac{5}{8}$ of an inch in diameter, and having ten threads to the inch; the shaft used was of steel and rather hard, the set screws making but little impression upon it. The set screws were set up with a force of 75 lbs. at the end of a ten-inch monkey wrench. The set screws used were of four kinds, marked respectively *A*, *B*, *C*, and *D*. They may be described as follows:

A, ends perfectly flat, $\frac{9}{16}''$ diameter.

B, radius of rounded ends, about $\frac{1}{2}$ inch.

C, radius of rounded ends, about $\frac{1}{4}$ inch.

D, ends cup shaped and case hardened.

The results are given in the following table:

No. of test.	*A*	*B*	*C*	*D*
1	1,412	2,747	1,902	2,807
2	2,203	2,747	2,354	1,962
3	2,131	3,079	3,079	2,173
4	2,143	2,958	2,958	2,203
5	2,294	2,897		2,958
6	2,203	3,048		2.717
Av.	2,064	2,912	2,573	2,470

The following remarks should be made in regard to each kind of tests:

A. The set screws were not entirely normal to the shaft; hence they bore less in the earlier trials before they had become flattened by wear.

B. The ends of these set screws, after the first two trials, were

found to be flattened, the flattened area having a diameter of about $\frac{1}{4}$ of an inch.

C. The ends were found, after the first two trials, to be flattened as in *B*.

D. The first test held well because the edges were sharp, then the holding power fell off till they had become flattened in a manner similar to *B*, when the holding power increased again.

KEYS.

The experiments on keys were made with pulley No. 11 except those marked *C* which were tested with pulley No. 12. In all cases where the keys were not as wide as the keyway they were wedged in with hardened steel pieces, the hardened steel piece in the pulley hub being as long as the hub was wide.

The load was applied as in the other tests, the shaft being firmly keyed to the holders. The load required at the rim of the pulley to shear the keys was determined, and this multiplied by a suitable constant, determined in a similar way to that used in the case of set screws, gives us the shearing strength per square inch of the keys.

The keys tested were of eight kinds, denoted, respectively, by the letters, *A*, *B*, *C*, *D*, *E*, *F*, *G* and *H*, and they may be described as follows, the first dimension being the length, the second the width, and the third the height:

A, were of Norway iron, $2'' \times \frac{1}{4}'' \times \frac{15}{32}''$; constant = 18.5184.

B, were of refined iron, $2'' \times \frac{1}{4}'' \times \frac{15}{32}''$; constant = 18.5184.

C, were of cast or tool steel, $1'' \times \frac{1}{4}'' \times \frac{15}{32}''$; constant = 49.78.

D, were of machinery steel, $2'' \times \frac{1}{4}'' \times \frac{15}{32}''$; constant = 18.5184.

E, were of Norway iron, $1\frac{1}{3}'' \times \frac{3}{8}'' \times \frac{7}{16}''$; constant = 18.5184.

F, were of cast iron, $2 \times \frac{1}{4} \times \frac{15}{32}$; constant = 18.5184.

G, were of cast iron, $1\frac{1}{3} \times \frac{3}{8} \times \frac{7}{16}$; constant = 18.5184.

H, were of cast iron, $1 \times \frac{1}{2} \times \frac{7}{16}$; constant = 18.5184.

The shearing stresses per square inch, as determined from the experiments, are given in the following table:

	A	*B*	*C*	*D*	*E*	*F*	*G*	*H*
1	41,202	36,482	100,056	70,186	37,036	34,166	38,700	29,814
2	41,758	37,334	91,344	66,110	37,222	36,944	37,222	38,978
3	40,184	39,254		64,630	36,850	30,278		
4	47,760	39,166		66,574		30,758		
Av.	42,726	38,059		66,875	37,036	33,034		

REMARKS.

A. Some crushing took place before shearing.

B. Slight crushing took place before shearing.

C. In the second test one of the wedges slipped and did not bear on the whole length of the key.

E. Inasmuch as these keys were only $\frac{7}{16}''$ deep, they tipped slightly in the keyway.

H. In the first test there was a defect in the keyway of the pulley.

DISCUSSION.

Prof. Jas. E. Denton.—I want to ask the author of the paper how far he was certain that the unplaned samples which were found stronger than the planed samples varied in size, principally in fixed cross section.

*Prof. Lanza.**—Replying to Prof. Denton's question, I will say that the unplaned specimens were cast in very carefully made rectangular moulds, and their variation of section was certainly very small.

Although the areas are doubtless not exact to the ten thousandth of an inch, it was thought best to give the decimals just as they were obtained by the students, by multiplying the two dimensions together.

---

* Author's closure under the Rules.

CCCXIX.

THE COST OF POWER IN NON-CONDENSING STEAM ENGINES.

BY CHARLES E. EMERY, NEW YORK.
(Member of the Society.)

In the years 1864 to 1868 the writer, then an Assistant Engineer in the U. S. Navy, was engaged in experimental duty at the Novelty Iron Works, N. Y., under the general direction of Chief Engineer B. F. Isherwood, then Chief of Bureau of Steam Engineering, U. S. N., and Horatio Allen, President of the Novelty Iron Works, N. Y., Commissioners under authority of the United States to make a series of experiments to assist in determining the limitations of the economical expansion of steam under practical conditions, and other collateral questions relating to the general subject. The results were never published under Government authority, but a general table was handed by Mr. Isherwood to Mr. R. H. Buel, who introduced it into the articles on "Steam Engineering," prepared by him for Appleton's Cyclopædia of Mechanics and the American edition of Vol. II. of Weisbach's Mechanics. The information is, however, in such shape as to be of little service without discussion and analysis by some one acquainted with the objects to be accomplished and the details of the work. The experiments were applicable only to steam engines of the forms then in most general use, and therefore did not include investigations with compound and triple compound engines at the very high pressures since found practicable. The writer having been connected with the work almost from its inception, felt that there were a number of questions which could be settled by further experiments, and perhaps become the basis of commercial value, and a little time before the Government experiments were abruptly brought to a close by a change of administration, he arranged with the Novelty Iron Works for the construction of a small experimental engine designed primarily to determine the quantity of steam which could be secured by lining a steam cylinder with a non-conducting material. The

general results of these and some subsequent experiments, together with a description of the apparatus, have been already communicated to the Society.*

Before the tests with non-conducting materials were completed, the company desired to extend their business by the manufacture on a large scale of non-condensing engines of a pattern based on modern requirements at the time, and in accordance as far as possible with the results which had been developed in the Government expansion experiments at so much expense. In the latter part of the year 1868, an arrangement was made by which the writer resigned from the Government service and took charge of one branch of the early development of the proposed system of non-condensing engines. An examination of the records of the Government experiments showed that while some of the experiments were applicable, they were insufficient to settle all the points at issue, and one of the cylinders of the experimental engine was utilized to make a complete series at varying pressures and points of cut-off which would give the general laws relating to that size of engine, and, by comparing the results with those obtained in the larger Government engines, when operated under similar conditions and with known results from other non-condensing engines, probable performances were deduced applicable to engines of various sizes operated under similar conditions. At that time Mr. Horatio Allen was president and Col. W. P. Trowbridge, formerly of the U. S. Engineers, now Professor of Engineering, School of Mines, Columbia College, was vice-president, the work being authorized by them and carried on under their administration, both being very much interested in the experiments as they progressed, and Col. Trowbridge, with his previous experience as an investigator, giving valuable suggestions as to the methods of discussing and presenting the results of the experiments by curves, etc., so that their general nature would be readily understood. Curves showing the results of the experiments were engraved to form part of an elaborate circular issued by the works in relation to the proposed business of building non-condensing engines, which circular contained articles written by both the President and Vice-president of the Company, a general explanation of the experiments by the writer, and tables computed with considerable labor under his direction, showing the probable cost of the power in non-condensing steam engines

* See Topical Discussions, page 375, Vol. VII., Trans. A.S. M. E.

of various sizes named, through various ranges of pressure and revolutions. The experiments of the writer had shown that there was economy in shortening the intervals in which steam was exposed to the surfaces of the cylinder by increasing the speed of revolution independent of the average speed of piston, and he pointed out that such engines were in many respects desirable on account of reduced space occupied, and offered greater facilities in transmission of power. It was finally decided to add a series of what were called "short stroke engines" to those with comparatively long stroke made in accordance with the former practice of the company, and the tables showed the probable economy resulting from the changes in proportions developed by the writer from the best light he had at the time. By the time this circular was completed, the directors of the establishment foresaw a depression in the principal business of the establishment, viz., the construction of marine engines, and notwithstanding the preparation for new work on non-condensing engines, decided to close the establishment. Shortly after, Col. Trowbridge, then Professor at Sheffield Scientific School, realizing the value of the circulars independent of their original object, procured them from the directors of the company, and with a little additional matter, including a page prepared by the writer, had them rebound and published under the title of "Tables and Diagrams Relating to Non-Condensing Engines and Boilers." The wisdom of Professor Trowbridge in making the work accessible can not be too highly commended; but the writer has felt that while the information was presented as fully as it could be—in fact, on a liberal basis for the purpose intended—still more information and instruction could be obtained by a more elaborate examination and analysis of the experiments in comparison with those available from other sources, and this work will be attempted at this time.

The curves as originally published are herewith presented (Fig. 34). The series of curves marked No. 1 were plotted directly from the experiments, and are intended to show by inspection the number of pounds of water required per hour by a small non-condensing engine at different steam pressures and points of cut-off, the ordinates representing "pounds of water per indicated horse power per hour," and the abscissæ the "points of cut-off, in fractions of the stroke;" the quantities in each case being reckoned from the origin, marked *O*, at the bottom and left as shown. The curves, *A*, *B*, *C*, *D*, *E*, refer respectively to steam

pressures of 25, 40, 60, 80 and 100 pounds, and show that the cost of a horse power in pounds of water per hour decreases rapidly from full stroke or 1 at the right to a minimum at a point of cut-off, which is shorter as the pressure is increased, and that after passing such minimum the cost rises rapidly as the cut-off is still further increased.

Curve *H* of the series designated No. 2 represents the calculated quantity of water required per indicated horse power per hour in a non-condensing engine using 80 pounds steam pressure at different points of cut-off. The calculations take into consideration the weight of steam required to fill the cylinder to the point of cut-off and also that required to supply the heat transmuted into work, but make no allowance for cylinder condensation, for losses by clearance or for deficiency in work due to insufficient area of passages, or to a back pressure in excess of the atmospheric pressure.

Curve *G* is a similar curve based on the additional condition that the clearances and ports equal 1-20th of the piston development.

Curve *D* is the same as *D* in series No. 1, and its position above the curves *G* and *H* shows the relative extent of the losses at different points of cut-off due to cylinder condensation and other causes not included in the calculated results for a small engine of about 5 horse power.

The curve *F* was originally interpolated in the position shown from such information as was available at the time to show the probable cost of using steam at 80 pounds pressure in an engine developing about 100 horse power. Later experiments show that for conditions stated the curve should more nearly approach the curve *G*.

These curves well illustrate methods commonly adopted to determine the influence on the general results of varying conditions. The law affecting each condition can only be ascertained satisfactorily by making a series of experiments varying that condition and keeping all others constant. For instance, in this particular case the weight of steam required in the small engine at varying degrees of expansion was obtained by varying the cut-off and keeping the steam pressure and revolutions constant, the latter requiring a variable resistance which was obtained with a large fan-blower. The outlet was closed, as the resistance was to be decreased so that less air was displaced, or just the contrary movement to that which would have been required had the blower

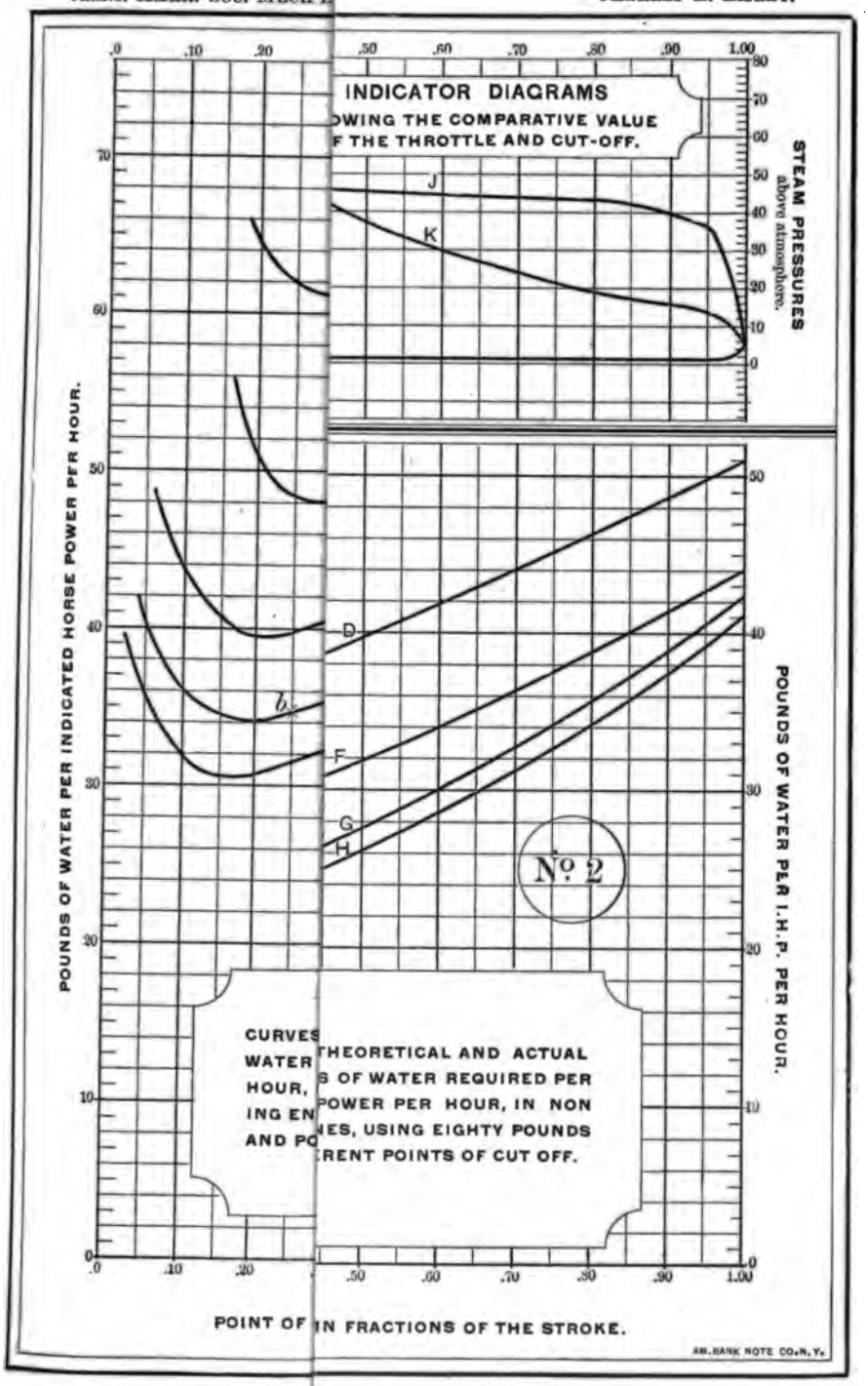
INDICATOR DIAGRAMS
DWING THE COMPARATIVE VALUE
F THE THROTTLE AND CUT-OFF.
J
K
STEAM PRESSURES
above atmosphere.
POUNDS OF WATER PER INDICATED HORSE POWER PER HOUR.
POUNDS OF WATER PER I.H.P. PER HOUR.
D
b
F
G
H
No. 2
CURVES THEORETICAL AND ACTUAL
WATER S OF WATER REQUIRED PER
HOUR, POWER PER HOUR, IN NON
ING EN NES, USING EIGHTY POUNDS
AND PO RENT POINTS OF CUT OFF.
POINT OF IN FRACTIONS OF THE STROKE.
AM. BANK NOTE CO. N. Y.

had a positive action. A similar series of experiments was made for each of the pressures referred to.

The general shape of curves showing the results of experiments may be obtained by plotting the detailed results on a sheet of cross section paper. The points will not exactly fall in a curve in all cases, as some variations will occur in all experimental work which can only be eliminated by repeating the experiments at points where an apparent irregularity in the curve creates doubt. When, as in this case, the experiments plot in curves having similar general features, the problem is simplified by the fact that one curve may be corrected to a certain extent at doubtful points from another. In this particular case a typical curve *D*, for instance, was compared with calculated curves *G* and *H*, No. 2, based on the positive requirements of the problem, which could not be changed by mechanism of any kind, thus again enabling the lines to be located between the various points representing the experimental data so as to reduce the probable errors for each case to a very small limit. The points upon which the curves were founded are not produced here, as they would only confuse the diagram. It may be stated that the curves for 40, 60 and 80 pounds pressure were satisfactorily located throughout. The curve for 25 pounds pressure showed greater variations, but it was easily brought into satisfactory position by comparison with the others. The curve for 100 pounds could not, from lack of resistance and boiler power, be developed for the very lowest degrees of expansion, but with the check of the other curves no further experiments could have changed its shape or position materially.

Curves No. 2 show that the quantity of steam actually required in excess of the calculated quantity is very nearly the same at all points of cut-off, though increasing somewhat as the expansion is increased. As, however, the weight of steam required per horse power decreases as the expansion increases, up to the point of inflection, the quantities of steam required in excess of the calculated quantities are much larger percentages of the total costs with the higher degrees of expansion. In this connection it will be interesting to note that corresponding series of experiments were made in the same engine with a vacuum, in which case the quantities of steam in excess of the calculated quantities were very much in excess of those shown without a vacuum, corresponding to the conditions in non-condensing engines. In fact, the losses were so great that no economy resulted from the vacuum for steam

pressures of 80 pounds or upwards when using an engine as small as that experimented with.

In order to show a practical application of the experimental curves there are represented in the space designated "No. 3," the approximate forms of two indicator diagrams with the same mean pressure, the one designated *K* showing an initial steam pressure of 80 pounds cut off at one-quarter of the stroke, the other designated *J* being the typical form of diagram resulting from the use of the throttle valve with main valve cutting off at $\frac{7}{8}$ of the stroke. The cost of the power may be found by referring to the small crosses *a* and *b* in series No. 1, from which it will appear that the cost for 80 pounds initial pressure cut off at $\frac{1}{4}$ of the stroke would be 35 pounds of water per horse power per hour as shown at *b*, and for a steam pressure throughout the stroke equal to the initial pressure of 53 pounds on diagram *J*, No. 3, cut off at $\frac{7}{8}$ of the stroke, the cost, as shown at *a* on diagram No. 1, would be nearly 56 pounds of water per horse power per hour, but in practice this would be reduced somewhat on account of the expansion obtained by the wire drawing or throttling shown by the inclination of the upper line of diagram *J*, as will be explained hereafter. The comparison shows the advantage of using a cut-off to reduce the power of an engine of given size rather than the throttle. To secure the best possible economy with the throttle the main valve should be provided with sufficient lap to cut off the steam at $\frac{3}{4}$ of the stroke or less, and the space in the steam chest intervening between the main valve and the throttle valve be reduced as much as possible. In this way the chest will be filled to boiler pressure during the period of cut-off, and though this will be reduced as soon as the main valve opens at the beginning of the stroke there will be secured a certain degree of expansion due to wire drawing which will reduce the cost proportionally to the actual degree of expansion secured. To determine the probable cost under these circumstances we may assume that the results which would be obtained with a diagram like *J* will be the same as if steam at the actual initial pressure shown were expanded a sufficient number of times to produce the actual terminal pressure. In this particular case there would be an equivalent expansion of 1.42 times, so the probable cost would be reduced to 52.0 pounds of water per horse power per hour, and similarly the results due to a greater reduction of pressure by wire drawing may be ascertained. In

many instances plain slide valve engines are used which are too large for the work. In such case the mean pressures are low and the costs of the power very great compared with what they would be in engines of proper size using steam expansively. For instance, in the engine with which the experiments were made the cost of the power with 80 pounds of steam cut off at $\frac{1}{4}$ of the stroke was only 35 pounds of feed water; but when the engine was operated with an initial pressure of 40 pounds, with a relative expansion of 2, the cost as shown was 52 pounds of feed water, and if steam had been cut off relatively at $\frac{7}{8}$ of the stroke the cost would have been over 60 pounds of feed water. It is not uncommon, however, to have still lower pressures in the steam chest which would run the cost up to 70 pounds of feed water as shown by the curve *A*. The illustrations indicate how many comparisons of interest and value may be made by the inspection of curves showing only the results with a small engine.

The tables referred to may be consulted for illustrations covering a little broader field, but are insufficient to embrace the whole subject, and have suggested to the writer the desirability of further analyzing the experiments to ascertain the probable cost under all customary conditions, and of formulating the results so that the cost for any particular case may be obtained approximately by a short calculation, without consulting bulky tables which, after all, may not contain the desired information for the particular condition under consideration.

It has been thought that the methods necessarily adopted in bringing together in one formula not simply the results shown by a single graphic curve, but those shown by a series of curves, vary themselves by a law necessarily represented by another curve, and their joint variations varying again by a law shown by the ordinates of still another curve, etc., etc., would be of interest to many here present.

The general principle involved in a work of this kind is to first find the equation of a curve representing each of the particular conditions, then to combine the equations by addition, multiplication or substitution, according to the conditions, so as to obtain from one equation the result due to all the conditions. The treatment in this case will be rather from the practical side, using equations of as simple form as possible, though they may not in all cases suit a particular set of conditions as accurately as a curve with more elaborate formula, but the errors thus intro-

duced will be small and the combination still keep the resulting formula in such simple form that it may be readily utilized.

(1) $y_1 = a\,(x+b)^{z+c} + d.$

(2) $y_2 = ax + d.$

(3) $y_3 = ax^c + d.$

(4) $y_4 = \frac{a}{x+b} + d.$

A formula amply comprehensive to take into consideration the conditions of nearly every series of experimental results which can be represented by a regular curve is that numbered (1). The reverse curves of more complicated cases will require a repetition of the exponential term. When the exponent of formula (1) equals (1), the formula reduces to the equation of a straight line numbered (2). The modification of formula (1), shown in equation (3), will cover most cases, though occasionally it is convenient to make the exponent variable and the base constant, giving it the logarithmic form. When in equation (3) the exponent $c = -1$, the resulting equation takes the general form (4), or that of the hyperbola or curve of reciprocals, which is of wider application than either of the others. In most cases a portion of one of the branches of a hyperbola can by substitution of special values in the general formula be brought to include three points in any regular curve resulting by graphically plotting the results of a series of experiments, when other values in the equation may readily be found by simple arithmetic without requiring even a table of logarithms as in the case of formulas (1) and (3). The formula of a straight line, No. 2, is even simpler in its application, and it is frequently better to use it within limits when the errors due to such use fall well within the errors of observation.

A formula representing the cost of the power in a non-condensing steam engine, including all conditions, may primarily be put in very simple form. If

P = The indicated horse power.

C = Actual cost in feed water per hour of each indicated horse power.

C_1 = Cost due to filling cylinder with steam of the initial pressure.

C_2 = Cost due to mechanical work performed.

C_3 = Cost due to cylinder condensation.

C_4 = Cost due to losses of pressure and other incidental losses.

S = Saving in cost due to expansion.

TYPICAL FORMS.

(1) $y_1 = a(x + b)^{z + c} + d.$

(2) $y_2 = ax + d.$

(3) $y_3 = ax^c + d.$

(4) $y_4 = \frac{a}{x + b} + d.$

PRELIMINARY FORMULÆ.

(8) $P = 0.000004d^2srm.$

(9) $k = 0.05454d^2srD.$ (See 13.)

(11) $D = 0.0030343p_1^{0.94}.$

(12) $D = 0.0023(p + 17)$ approximately.

From (9) and (12).

(13) $k_p = 0.0001254d^2sr(p + 17)$ approximately.

GENERAL FORMULÆ.

(5) $C = C_1 + C_2 + C_3 + C_4 - S.$

(16) $C_1 = 31.63\frac{p + 17}{p - 2}$ approximately.

(16a) $C_{1a} = 41.728\frac{p_1^{0.94}}{p - 2}.$

(16b) $C_{1b} = 13752.1\frac{D}{p - 2}$

(17) $C_2 = 3$ approximately.

(18) $C_3 + C_4 = [E - (C_1 + C_2)]\,n.$

(19) $E = \frac{1374.8122}{p + 10.5882} + 35.8235$

(20) $n = \frac{17.081}{P + 13.881}$

(21) $S = 22(1 - c)$ Between limits $1 - c = 1$ and $1 - c = h$.

(22) $h_{min.} = 1 - \frac{18}{p + 15} = \frac{p - 3}{p - 15}$

(23) $h = 0.64$ approximately for engines cutting off with main valve.

NOTATION.

P = The indicated horse power.
C = Actual cost in feed water per hour of each indicated horse power.
C_1 = Cost due to filling cylinder with steam of the initial pressure.
C_2 = Cost due to mechanical work performed.
C_3 = Cost due to cylinder condensation.
C_4 = Cost due to losses of pressure and other incidental losses.
S = Saving in cost due to expansion.
E = Experimental cost with small engine at full stroke.
n = A ratio used in determining C_3 and C_4.
k = Number of kals per hour.
c = Fraction of the stroke at which steam is cut off.
D = Weight of a cubic foot of steam.
p = Pressure of steam above atmosphere (gauge pressure).
p_1 = Absolute steam pressure.
d = Diameter of steam cylinder in inches.
s = Stroke of piston in inches.
r = Number of revolutions per minute.
m = Mean effective pressure in cylinder in pounds per square inch.

(5) $C = C_1 + C_2 + C_3 + C_4 - S.$

Also let

$E =$ Experimental cost with small engine at full stroke.

$n =$ A ratio used in determining C_3 and C_4.

$k =$ Number of kals per hour. (A "kal" is one pound of water evaporated into steam.)*

$c =$ Fraction of the stroke at which steam is cut off.

$d =$ Weight of a cubic foot of steam.

$p =$ Pressure of steam above atmosphere (gauge pressure).

$p_1 =$ Absolute steam pressure.

$d =$ Diameter of steam cylinder in inches.

$s =$ Length of piston stroke in inches.

$r =$ Number of revolutions per minute.

$m =$ Mean effective pressure in cylinder in pounds per square inch.

In the writer's Paper on "Estimates for Steam Users," † it is shown that a mathematical expression showing the value of one horse power for a double acting engine reduces, by combining the constants, to the form,

(7) $P = 0.000003967\ d^2srm$, or for closely approximate calculations,

(8) $P = 0.000004\ d^2srm.$

The same paper also gives a simple formula for determining the weight of steam used per hour in a steam engine and the expressions hereinafter employed to determine the weight of a cubic foot of steam. As deductions from the latter form an important element of the proposed formula, it is considered necessary to show in full the various steps taken in deducing the same and thereby illustrate also the principles adopted in formulating experimental observations above referred to.

The calculated quantity of steam which will be required by an engine with steam admitted at full stroke in both directions may evidently be found by multiplying the number of cubic feet developed by the piston in the time considered by the weight of a cubic foot of steam at the pressure employed, so,

$$(9)\ k = \frac{\pi d^2}{4 \times 144} \times \frac{2s}{12} \times 60rD = 0.05454\ d^2srD,$$

---

*See the writer's Paper on "Estimates for Steam Users," CLXVIII., Vol V., Trans. A. S. M. E., p. 282.

† *Ibid.*

which requires that the value of D be taken from a table of the properties of steam. In practical use it would evidently be more convenient to derive the value of D directly from the pressure. The same question arose in developing a formula for the flow of steam in pipes, in which case it was desirable to find an expression which would so combine with formula relative to the flow of fluids that the resulting equation could be integrated directly and thus take into consideration the change of the density or weight of the steam as the pressure decreased in transmission. The ordinary formulæ for obtaining the weight of a cubic foot of steam are anything but simple. The best tables showing the properties of steam are probably those given in the second volume of Weisbach and in Appleton's Cyclopædia of Mechanics, which were calculated by Mr. Buel from rules given by Rankine so far as applicable. It will be remembered that Rankine gives equations showing closely the results of experiment applicable to a much wider range than those previously used. His formula for the weight of a cubic foot of steam though simple at the outset involves many complex terms when by numerous substitutions its value is obtained in known quantities. It was therefore inapplicable for the present purpose, and it was determined to take specific tabulated values corresponding to pressures widely separated calculated with the formula and substitute the same in a formula of the form—

$$(10)\quad D = ap_1^c$$

corresponding to the first term of (3).

The constants a and c were found by forming two equations from different tabulated values of D and corresponding values of p_1, and the third point necessary to locate the plane curve being evidently zero, through which all curves of the form must pass, the result was as follows:

$$(11)\quad D = 0.0030343p_1^{0.94}.$$

It was very gratifying to find that this simple expression gave results corresponding with those in the table through all parts of the curve from zero to a pressure of 1,000 pounds, the variations in all cases tried being in the fourth place of decimals. The similarity in result throughout all parts of the curve showed that the complicated and simple expressions were practically identical. The possibility of this is readily explained by considering that, in expanding a binomial or polynomial, one side of the equation

may be very simple and the other show a large number of complex terms, and when definite values are given to the terms of the polynomial, it becomes monomial or in the exact form of the equation given. The value of D stated could evidently be used as a factor in an equation to be operated upon by the processes of differentiation and integration ; it would also answer the simple purpose of showing the weight per cubic foot in the formula under discussion, to determine the number of pounds of steam required in an engine.

Another attempt was however made to obtain a still simpler expression based on the equation of a straight line (2). Upon substituting two pairs of corresponding values as before in such an equation, the expression became

$$(12)\ D=0.0023\ (p+17).$$

Note that in this case p is the gauge pressure, or pressure above the atmosphere. This equation was found to be sufficiently accurate for most purposes between the limits of zero and eighty pounds gauge pressure.

The results are shown clearly to the eye by the diagram (Fig. 35), in which, with the origin at the left and bottom, the lengths of the ordinates represent weights per cubic foot and those of the abscissa the absolute pressures ; the pressures above the atmosphere being also given. The tabular results first above referred to, based on Rankine's method, are shown by the curved black line. This curve, as previously stated, is also given by formula (11) above stated so accurately that it should not be called an approximate formula. The results shown by the approximate or straight line formula are indicated by the heavy dotted straight line which, as will be seen, corresponds with the curve at about atmospheric pressure and at an absolute pressure of about 60 lbs., the variation between these limits being slight; the approximate formula giving slightly lower results at low pressures and higher results for higher pressures. The variations are considered of trifling importance up to eighty pounds gauge pressure. For pressures below those of the atmosphere, the straight line gives necessarily higher results than those of the curve and in fact reaches the base at a point corresponding to (17−14.7=) 2.3 lbs. to the left of the origin. The approximate formula would however be used only between the limits of 15 and 95 lbs. absolute pressure or zero, and 80 lbs. gauge pressure. The

curve in light dotted lines is plotted from tables which have been longer in use and are more generally accepted than those above referred to. Such tables are supposed to represent more closely the actual experimental results than the formulæ developed by Rankine, but the variations between the two are, on the whole, quite small relatively. The greater range of the Rankine formula makes it probable that, everything considered, it is the more reliable. The light dotted curve was plotted from the tables given in Porter on the Steam Engine Indicator, and corresponds almost exactly with others published by Isherwood and Nystrom, and those found in The Encyclopædia Britannica, &c. It will be observed that the straight line represented by the approximate formula lies for some distance between what may be called the Rankine curve and the more common curve, and must therefore, within limits named, be as correct as either in expressing the results of experiments which have a range of error sufficient to warrant the variation shown between the two curves.

For ordinary purposes, with pressure below 80 pounds, the approximate formula (12) is sufficiently accurate: so substituting the value of D therefrom in (9), we have

$$(13)\ k = 0.0001254\ d^2sr\ (p + 17) \text{ approximately.}$$

For each 1,000 revolutions the cost would be

$$(14)\ k_m = 0.00209\ d^2s\ (p + 17) \text{ approximately.}$$

For each horse power per hour the cost would be

$$(15)\ k_p = 31.63\ \frac{p + 17}{m} \text{ approximately.}$$

The simplicity of this equation may occasion surprise, as all the dimensions of the engine have disappeared. The cost of an indicated horse power is however entirely independent of the number of horse powers for the reason that a horse power per hour or a horse power exerted for one hour is a unit of work and represents the exertion of 33,000-foot pounds per minute exerted through 60 minutes or 1,980,000-foot pounds, so the cost of a horse power per hour is really the cost of 1,980,000-foot pounds of work independent of time.

Therefore in combining equations (8) and (9) to obtain (15) the dimensions of the engine appear in both numerator and denominator and are thus eliminated.

In this particular case the mean pressure will be assumed equal

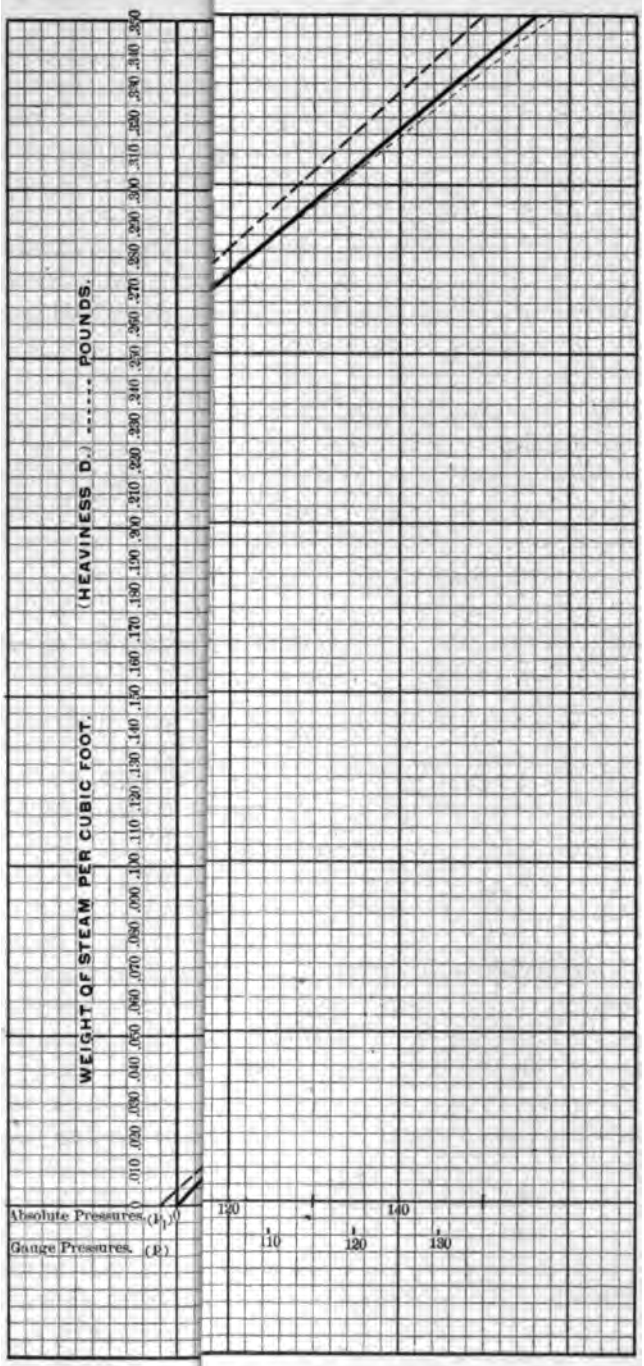
WEIGHT OF STEAM PER CUBIC FOOT. (HEAVINESS D.) ------ POUNDS.
0 .010 .020 .030 .040 .050 .060 .070 .080 .090 .100 .110 .120 .130 .140 .150 .160 .170 .180 .190 .200 .210 .220 .230 .240 .250 .260 .270 .280 .290 .300 .310 .320 .330 .340 .350
Absolute Pressures. (P1) 0
Gauge Pressures. (P)
120
140
110
120
130

to the initial pressure less two pounds for back pressure above the atmosphere, so from (15) we have as one value required in equation (5)

$$(16)\ C_1 = 31.63\ \frac{p+17}{p-2}\ \text{approximately.}$$

For accurate calculations and in any case for a steam pressure greater than $p = 80$ pounds ($p_1 = 80+14.7 = 94.7$ pounds, absolute) the value of D should be taken from Eq. (11), when we have

$$(16a)\ C_{1a} = 41.728\ \frac{p_1^{0.94}}{p-2}.$$

When desired, the specific weight, or weight per cubic foot (D), of the steam may be taken from a standard table when

$$(16b)\ C_{1b} = 13752.1\ \frac{D}{p-2}.$$

The results obtained from the different formula must necessarily show as much variation as the ordinates of the corresponding curves presented.

The value of C_2, equation (5), viz. the cost due to mechanical work performed, may be ascertained from the thermal equivalent of heat and the consideration that as previously expressed a horse power per hour is really a unit of work and equals 1,980,000-foot pounds. On the basis that one thermal unit is the equivalent of 772-foot pounds of work,* a horse power per hour would require 2,565 thermal units, and the principal question to be determined is the gross work required in a steam cylinder to produce 1,980,000 foot pounds net. Mr. Isherwood has always taken the total power of the engine, that is, the power based on the absolute pressure in the cylinder from the true vacuum on the ground that the steam had to perform the work of expelling the atmospheric pressure as well as that utilized on the piston. It is believed however to be more rational to consider that the external work shown by the differences of pressure on the piston, or that on which the indicated horse power is based, is all that requires an actual expenditure of heat, and that steam going off at the back pressure carries with it the heat required to maintain it at that pressure. This will undoubtedly be disputed, but there are many

* The old value is used as later experiments have modified it but little.

evidences in its favor. On any other basis high pressure engines could not work as economically as they are now known to do, and in looking over some results from the Dixwell experiments as reported by Mr. Barrus,* to prove another point, the writer discovered that the difference between the quantity of heat lost in the performance of work on a steam piston and that lost by blowing steam through the same cylinder and over the same surfaces without doing work was not sufficient to account for the heat required in the performance of the work if that for displacing the atmosphere were included. The number of pounds of feed water required to furnish 2,565 heat units between the actual limits of temperature will vary with the pressure, and for strict accuracy should be calculated for each case. The illustrative table at the end of this paper has been calculated by taking from the total heat of the steam due to the pressure the total heat of water due to a pressure of 17 lbs. steam pressure absolute, and dividing 2,565 by the result. On this basis it will be seen that the condensation of 3 pounds of water is more than sufficient to furnish the heat transmuted into work within the limits considered or even when the lower limit is at atmospheric pressure, and this may be used in approximate calculations. Hence

$$(17)\ C_2 = 3 \text{ approximately.}$$

The cost due to cylinder condensation represented by C_3 in formula refers to the great losses occasioned by the changes of temperature of the walls of a steam cylinder fully discussed in a previous paper by the writer.† It is entirely independent of external refrigeration which, by proper arrangements, can be rendered quite insignificant. The actual cost of an indicated horse power in pounds of feed water is increased as compared with the calculated cost not only by cylinder condensation as above set forth and represented by C_3 in formula (5), but by causes which produce deficiency in power, such as contracted passages or ports and imperfect steam distribution, as well as the minor losses due to external refrigeration, all represented by C_4 in formula (5). The cylinder condensation could apparently be most completely ascertained by calculations based on the surfaces exposed and the differences of temperature at different points of the stroke on the

* See discussion of the writer's papers, CCXLVIII. and CCXLIX., at the Washington meeting, Vol. VIII., page 472; Vol. IX. Trans. A. S. M. E.

† See Paper by the writer on "Cylinder Condensation," etc., CCXLVII., Vol. VIII., Trans. A. S. M. E.

basis of the laws of the transmission and radiation of heat, but this elaborate study would not include nearly all the elements necessary to make a complete analysis of this complex problem, so it has been considered practically as accurate to attempt merely to produce formulæ which will show approximately the experimental results and therefrom deduce the sum of C_3 and C^4 rather than attempt to separate C_3 which will form the larger proportion of the whole.

The ordinates included between curves G and H and the experimental curve D in diagram No. 2 represent the sums of all the losses above stated, and it will be shown that these losses are expressed by the formula

$$(18)\ C_3 + C_4 = (\mathrm{E} - (C_1 + C_2)n;$$

that is, the difference between the experimental cost E in small engine and the sum of the fixed costs C_1 and C_2 due to filling the cylinder and the performance of the work (which difference is represented by the portion of the full stroke ordinate intercepted between the curves D and G), is to be reduced for engines of greater power by a fractional multiplier n, to cause a change of value corresponding to the change of condition. The first step is to formulate the experimental value of E. The engine was provided with a lap valve and so did not at any time operate at exactly full stroke, but the costs due to full stroke are readily found by producing the curves A, B, C, D and E, Diagram No. 1. From the conditions of the problem the cost should be infinite with no pressure, and the pressure infinite with no cost, so each branch of the curve sought should be an asymptote, and equation (4) of the hyperbola is the natural one to use. It however contains but three constants, a, b and d, but from these the full stroke results due to curves B, C and D, corresponding to pressures of 40, 60 and 80 pounds, were used, since, as has been stated, curves A and E were in portions incomplete and developed to correspond with those first named. Making y_4 equal the cost and x the corresponding steam pressure, and substituting in the three values named, we have

$$(19)\ E = \frac{1374.8122}{p + 10.5882} + 35.8235,$$

which will be found to give accurately full stroke values for the curves B, C and D, to wit: for 40 pounds pressure, a cost of 63 pounds of feed water; for 60 pounds pressure, 55.3 pounds cost,

and for 80 pounds pressure, 51 pounds cost. For 25 pounds pressure the calculated cost is 74.8 pounds, and the cost as plotted about 75.5 pounds, and for 100 pounds pressure the calculated cost is 48.2 pounds, and the same as plotted, 48 pounds. It is probable that the equation more accurately represents the true values than was possible with the free hand work necessary in extending the curves last named.

It is next required to find the value of n in equation (18). It is well known that the cylinder condensation in small engines is much larger than in large ones, which can be explained by the fact that as the linear dimensions of the cylinder are increased, the interior surfaces do not increase as rapidly as the capacities. In connection with the experiments plotted on the curves another series of experiments also showed conclusively that there is economy in high speeds of revolution, independent of speed of piston, which is explained by the fact that, as the speed of revolution is increased, the alternations of temperature in the cylinder take place at more frequent intervals, and there is not time during each single stroke to change the temperature of the metal to as great a depth.* The result is that less weight of metal is heated and cooled, and the loss by condensation becomes correspondingly less. Higher speeds of revolution of an engine with cylinder of the same size, but otherwise operated under like conditions, cause an increase of power; and an increase in the size of the cylinder, with like conditions otherwise, causes also an increase in power. The comparison of various experiments shows that the cylinder condensation reduces as the power is increased either by increased speed of revolution or an increase in the size of the cylinder (at least when cylinders of substantially similar proportions are considered). This deduction is made the basis of formulating the value of n in equation (18). For the small engine n would necessarily equal unity to produce the experimental results for 3.27 horse power, and this value was compared with $n = 0.1843$, deduced for 78.8 horse power developed under similar conditions of pressure and expansion in experiments made with a Babcock & Wilcox engine at the American Institute under the direction of the writer, in the year 1869. The equation obtained gives results corresponding well with experiments made at the same time on a Harris-Corliss engine and those made in the following year with a Porter-Allen

* See Topical Discussions, page 375, Vol. VII. Trans. A. S. M. E., where a tabular statement of the results of these experiments is given.

engine developing 80 horse power, under the directions of a committee of which Prof. Thurston was chairman. By the conditions of the problem the multipliers can never be minus or less than 0, but may increase as the size of the engines diminish. By substituting the special values above stated in equation (4) with $d = 0$, there results

$$(20)\ n = \frac{17.081}{P + 13.881}$$

which will be found to fulfill all the conditions referred to.

The value of S, expressing the saving in cost due to expansion and the only remaining quantity in equation (5), has been formulated as follows:

Comparing the general direction and position of the various curves with D, or that corresponding to 80 pounds, and the curve D again in No. 2, with the calculated curves, G and H, we find that the experimental curves are practically parallel with each other up to the points of inflection and nearly parallel with the calculated curves. In other words, that the relations between the experimental curves at different points of cut-off may be expressed by constant arithmetical differences, but that the difference between results shown by any particular curve and the calculated results for the same pressures and points of cut-off would somewhat increase as the expansion increased up to the points of inflection. The parallelism of the curves makes it possible to use a simple formula to show the saving due to expansion, applicable between the limits of full stroke in one direction and the points of inflection in the other. A complete formula which would be applicable to both sides of the minimum would require a series of operations similar to those by which the curves G and H were determined. In developing the curves last named a cylinder was assumed with the volume required to develop one horse power at the pressure and point of cut-off considered, based, of course, on the work done during the admission of the steam and that done during free expansion, and the cost was made up from the weight of steam required to fill the cylinder to the point of cut-off and that required to supply the heat required for the performance of the work; a clearance of one-twentieth of the displacement without cushion having been considered, in developing curve G and curve H, showing the results for no clearance.

It will be observed that the experimental curves nearly to the

points of inflection are practically straight lines as well as parallel, so the result at any point of the stroke compared with that at full stroke for the same pressure and the same general conditions can be closely expressed by the formula of a straight line equation (2) with $d = 0$, as follows:

$$(21)\quad S = 22\,(1 - c)\ \begin{pmatrix}\text{Between limits } 1 - c = 1 \\ \text{and } 1 - c = h\end{pmatrix}$$

The minimum value of h is determined by the consideration that it is not economical to continue the expansion so that the pressure will fall below say 3 pounds, which would at least be necessary to equilibriate the back pressure on the piston and the resistance of the engine itself so the minimum value of h or

$$(22)\quad h_{min.} = 1 - \frac{18}{p+15} = \frac{p-3}{p+15}.$$

By comparison of experimental data it is also found that

(23) $h = 0.64$ approximately for engines cutting off with main valve.

A complete formula for the value of C, equation (5), may be constructed by substituting in the values of the several terms, but it will be simpler to make the substitutions in the arithmetical solution. The formula may be illustrated by applying the same to the conditions of the trial of the Babcock & Wilcox engine previously referred to. The steam pressure being 80 lbs. by (16a) $C_1=38.56$. Adding $C_2=3$, $C_1+C_2=41.56$. For pressure named E (eq. [19])= 51, and for 78.8 H P by (eq. [18]) $n=0.1843$. $E-(C_1+C_2)=9.44$. and n times this gives 1.74 as the value of the losses C_3+C_4 (eq. [18]) on basis assumed, which added to C_1+C_2 gives for full stroke cost $C_1+C_2+C_3+C_4=43.30$. The cut off in this case being at 0.19 stroke $1-c=0.81$. The minimum value by (22) by a coincidence also equals 0.81 in this case, so from (21) $S=17.82$, which subtracted from the full stroke cost above gives $C=25.48$, which is the reported cost. The curve for this engine would therefore fall somewhat below the curve F (No. 2), and fixing in mind the value 43.3 at full stroke and 25.5 at two-tenths stroke we can better appreciate the various operations accomplished with the formula. We have reached the cost due to expansion by first finding the full stroke cost under two conditions, viz.: the experimental one, as shown by curve *D*, and the calculated one, as shown by curve *H*. The saving by expansion has been deduced by assuming that the difference in cost is constant throughout the stroke, and repre-

sented practically by a straight line parallel with the apparently straight portion of D, which practice has shown to be substantially correct. This locates the cost for 0.19 cut-off at 25.5 lbs., as shown by experiment, and the chances for further saving are shown by the position of this value above the curve G, in which the calculated value is 22 lbs. In no way can the saving be brought down as low as 22 lbs., but with engines very well constructed, having clearances less than the $\frac{1}{20}$ assumed and careful provisions to save heat, that minimum can be more closely approximated. The Harris-Corliss engine did not on the trials named do quite as well as the Babcock & Wilcox engine. The Porter-Allen engine the next year gave a trifle better result than the Babcock & Wilcox engine with lower steam pressure, but the steam was slightly superheated.

The Hoadley engine tested at the Centennial Exhibition under the direction of a committee of which the writer was a member, developed with a steam pressure of 125 lbs. 80.3 H P at a cost of 25.6 lbs. of feed water, or almost precisely the same as the cost in the Babcock & Wilcox engine, although the steam was distributed entirely with the main valve. On applying the formula, however, it shows that the cost should have been but 20.72 lbs. for a minimum value of $1-c=0.86$, on account of the high steam pressure. This result would probably be reached in small engines running at high speeds if the distribution of steam could be made as perfect as in larger engines. We shall certainly watch with interest the work that Mr. Porter has now in hand to try and accomplish this purpose. The fact is, however, that high speed engines as now made are practically of the type of the Hoadley engine tested. The steam is distributed with a single lap valve, requiring for high expansions considerable wire-drawing, early exhaust and early compression, all aiding in the solution of the problem of governing the engine quickly, but at the same time requiring the use of a cylinder for the same work larger than would be necessary with an indicator diagram of the typical form for a slow running engine. The probable cost may be determined from formula on the basis of the Hoadley experiments by making $h=0.64$ as in equation (23), thus considering that the defects in the distribution of steam, &c., practically limit the effective value of the expansion. The probable performance of ordinary engines not well adapted for securing economy of steam by expansion may also be approximated by using substantially the same value of h. Such engines do not show a gain in expansion up to the limit expressed by the

minimum value of h, equation (22), but the cost appears to remain substantially the same for a range of from about 2½ to 4 expansions. When the proper grade of expansion is exceeded in any case the costs increase rapidly, as shown by all the curves; so it is important in proportioning an engine not to get it too large for the work, as has been previously explained.

It will be found generally that the costs will be higher than those given by the formula on account of various imperfections which creep into the operation of engines operating regularly under practical conditions which can be more carefully looked out for and avoided in running an engine merely to secure experimental results.

The following table shows the results obtained by the application of the formula under the conditions stated in the headings:

1	2	3	4	5	6	7	8	9	10	11
	POUNDS OF WATER PER INDICATED HORSE POWER PER HOUR.									
					Engine of proper size to develop 100 H. P. P = 100.					
Gauge Pressure.	Experimental results at full stroke in small engine, extended to the higher pressures by formula. Eq. (19).	Required to fill Cylinder. Approximate. Eq. (16).	Required to fill Cylinder. Eq. (16a).	Required to supply heat for mechanical work.	Required for cylinder condensation and miscellaneous losses. Eq. (18).	Saved by expansion. (Eq. 21).	Required at full stroke. Eq. (5). S = 0.	Required with cut-off at 0.6 stroke.	Required with cut-off at 0.3 stroke.	Required at most economical cut-off.
p	E	C_1	C_1a	C_2 Calc'd	$C_3 + C_4$	S for h min.	C 1−c=1	C 1−c=0.4	C 1−c=0.70	C 1−c=h.min
25	74.80	57.75	57.75	2.63	2.16	8.80	62.54	53.74	....	50.44
40	62.99	47.44	47.25	2.61	1.97	14.81	51.83	43.03	....	37.02
60	55.29	41.99	41.49	2.60	1.68	16.72	45.77	36.97	30.37	29.05
80	51.00	39.33	38.56	2.58	1.48	17.82	42.62	33.82	27.22	24.80
100	48.26	.....	36.32	2.57	1.41	18.57	40.30	31.50	24.90	21.73
125	45.96	... .	35.24	2.56	1.22	19.16	39.02	30.22	23.62	19.86
150	44.38	.....	34.19	2.55	1.15	19.60	37.89	29.09	22.49	18.29
200	42.35	.....	32.79	2.53	1.05	20.15	36.37	27.57	20.97	16.22
300	40.25	.....	31.21	2.51	0.98	20.75	34.70	25.90	19.30	13.95
400	39.17	.... ..	30.28	2.49	0.96	21.03	33.73	24.93	18.33	12.70
500	38.52	. .....	29.65	2.47	0.96	21.23	33.08	24.28	17.68	11.85

The table shows that economy should be secured by the use of high steam pressures in non-condensing engines equal to that ob-

tained at somewhat lower pressures with condensing engines. It would undoubtedly, however, require the use of compound, triple compound, and possibly quadruple compound engines, to secure results approximately as low as the better ones shown, and it will probably be more economical in all cases to limit the expansion in any one cylinder of a compound engine to 2½ times. There may be doubts as to the accuracy of results computed for pressures as high as 300 to 500 pounds based on experiments carried only to 100 pounds. The formulæ have, however, been so developed that the error can not be very great. It should be remembered that the quantity C_{1a}, col. 4, is actually calculated on the basis of filling with steam a cylinder of sufficient size to develop 1 horse power at full stroke, so the sum of this and the quantity in col. 5 representing the water condensed in the performance of mechanical work lays a foundation for the full stroke cost which is absolutely accurate for the particular conditions assumed, and approximately so for probable conditions. It is only the quantity E, col. 2, which is computed from a formula based on experiments from 40 to 80 pounds, and checked by experiments from 25 to 100, and this is only used to determine the probable losses due to cylinder condensation, etc., by comparison with the calculated values or the sums of quantities in cols. 4 and 5.

It is believed that the general methods adopted in the development of these formulæ will be found of great assistance in plotting the results of experiments of various kinds, and those who are interested in this particular subject will find it a profitable study to repeat in detail the various operations which have here necessarily been enumerated briefly, ascertaining, if thought best, the variation which will be obtained by using the formula of curves more closely fitting some of the experimental conditions. For instance, using a formula based on the principles by which the theoretical curves *G* and *H* were determined, as previously explained, to ascertain the relative costs at different degrees of expansion, instead of the simple equation of a straight line. The influence of clearance spaces on the result can also be more elaborately considered. The probable errors are, however, so limited by the experimental values on one side and the calculated results on the other, that more elaborate equations will only be warranted in ascertaining the results due to superheating, compounding, or other means for producing unusual economies. We again call attention to the fact that the opportunity for further economies is represented by

the narrow space which would be inclosed between the curve *G* (No. 2, Fig. 34), and a curve below *F* passing through 43.3 cost at full stroke and 25.5 cost for $\frac{2}{10}$ cut off; the specific costs applying to a steam pressure of 80 pounds, and the differences, represented by the narrow space, to all customary pressures. If in the end others find, as has been the experience of the writer, that curves of the simpler form, substantially representing experimental values within the limits of observation, are, on the whole, practically as correct and far more serviceable than more elaborate ones, still it is believed that the subject will be found so interesting as to furnish ample compensation for the labor involved.

The recorded attempts at economy by compounding high speed non-condensing engines, appear only to have brought the cost of the power nearly down to that of the better class of automatic cut-off engines operated at moderate speeds, but the expense of compounding high speed engines is apparently warranted, as such results are better than can be obtained with single engines in which the steam is distributed with customary valve gear.

DISCUSSION.

Prof. Jas. E. Denton.—The water consumption curves, upo which Mr. Emery bases his interesting paper, have, through Prof. Trowbridge's publication, been to me a source of reference for several years. They afford data regarding that vitally important factor of a theoretical calculation of steam consumption,—the percentage of cylinder condensation,—which undoubtedly warrants their use as a basis of formulæ such as are elaborated in the paper.

As a student of experimental steam data, I am somewhat disappointed at the fact that the actual observations which the water curves represent are withheld from publication. Discrepancies between the results of theoretical deductions from the curves and future experimental data from other engines, require for their intelligent discussion, that the probable experimental error of the observations be known; and the appearance on the chart of the separate observations would be the simplest way of providing this information. I have also met the need of a knowledge of the amount of cushion, point of release, amount of wire-drawing and speed of revolution which prevailed during the production of the data of these water curves.

No information on any of these details is given in the paper, and

I should be glad if Mr. Emery would contribute them to the present representation of one of the most complete series of steam tests on record. It is also highly desirable that there might be added one or two definite examples, of the actual data upon which are based such broad statements as that regarding the loss of economy by the use of a condenser on small engines (see top of page 6), and regarding the saving due to increase of speed of revolution (page 16). Both of these points are of quite equal importance, scientifically, with the question of steam consumption at variable cut-offs and pressures.

The author's general reference to these two points is quite warrantable in view of his active connection with the investigations; yet to show how little increase of speed does produce a sensible saving in steam consumption, and whether any considerable range of speeds was tried, and whether the loss due to the use of a condenser was confined to any particular pressure or speed—would be an addition to our knowledge greatly desired. It is quite an open question to-day, among those having less experience than Mr. Emery, whether there is any appreciable gain in economy due to increase of speed above a very moderate number of revolutions—about 30 for engines of about 5-foot cylinder capacity and some greater number for smaller engines, now unknown, but which might be settled by the citation of a few examples from the series of tests referred to (page 16).

Regarding the non-saving effect of a condenser, one of the curves on the plate, which I append to this discussion, shows that at 90 lbs. gauge pressure and about 284 revolutions per minute, a 7″ × 14″ Buckeye engine certainly derives increased economy by the use of a vacuum of about 16 inches of mercury. A word from Mr. Emery, but better a sample of the results referred to at top of page 6, will enable me to know whether my experiments covered conditions so far different from Mr. Emery's that our results are possibly compatible. In making the experiments with the Buckeye engine, the load was principally that due a dynamo, running into a very large rheostat whose temperature maintained itself constant by radiation into the atmosphere, so that the load was under complete control indefinitely. The condensing tests were made always by causing a vacuum in the condenser suddenly, without stopping or interfering with the engine, the vacuum being already formed in a chamber contiguous to the condenser by an independent air pump, and the proper valves being manipulated so

as simultaneously to connect the condenser with the contiguous chamber and close it to the atmosphere.

The condenser was of the surface form, and the exhaust steam was sent through it, both for the condensing and non-condensing tests, the liquefied steam being weighed on platform scales. The duration of the tests was from 30 to 60 minutes; but weighings were made every five minutes, to *prove* that the rate of consumption was uniform.

The change from non-condensing to condensing was made in less than 30 seconds, and the rate of steam consumption changed so quickly, that, after the first 5 minute interval, that rate was uniform. The following is a sample of the water record:

$\frac{5}{8}$ cut-off; 270 revolutions; boiler pressure, 90 lbs. Load: Westinghouse dynamo, 30 ampères and shop shafting.

No. of 5 Minute Interval.	Water per 5 Minutes.		Remarks.
	Non-condensing.	Condensing.	
0	0	0	Temp. condensed steam, 140° F.
1	122	104	Outlet condensing water, 120°.
2	121	103	Inlet condensing water, 78°.
3	117	102	Condensing water, 6 cu. ft. per minute.
4	118	99	Vaporization from barrel per hour, 3 lbs.
5	116	100½	
6	117½	97	
7	118	98	
8	116	100	
9	118		
10	119		
11	118		

It should be understood that the 5 minute weighings are only intended as checks to assure us of the practically uniform condition of the whole system. The water ran continuously into one weighing tank until about 400 lbs. were accumulated, when the stream was switched into another weighing barrel, thus allowing the first barrel to be weighed at leisure. Consequently discrepancies in the 5 minute readings are reduced in the final result to a fraction of the amount recorded.

By careful attention, however, it is quite possible to make continuous 5 minute weighings which are very accurate, even taken individually.

For example, the following are three sets of weighings under different conditions.

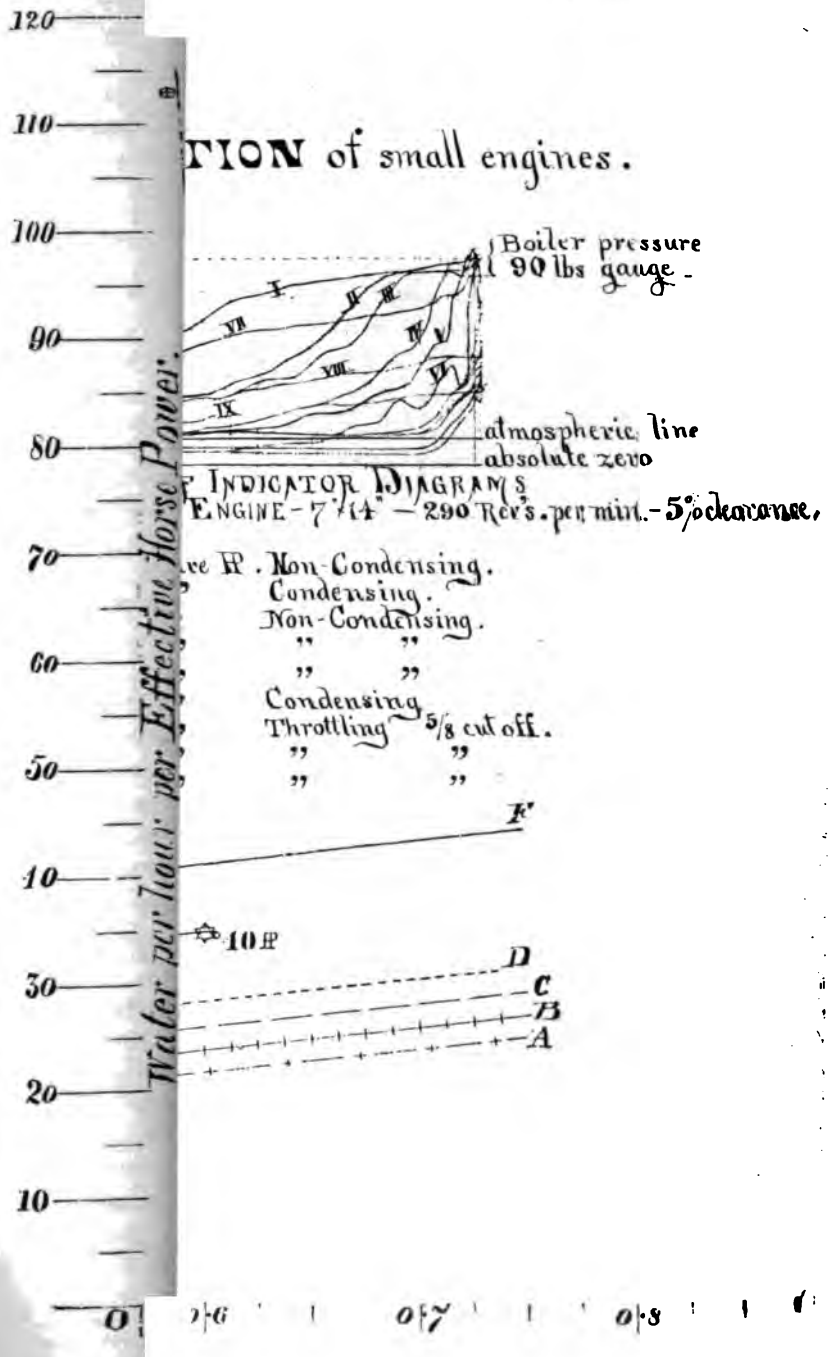
TION of small engines.
Boiler pressure
90 lbs gauge.
atmospheric line
absolute zero
INDICATOR DIAGRAMS
ENGINE - 7" 14" - 290 Rev's. per min. - 5% clearance,
Non-Condensing.
Condensing.
Non-Condensing.
Condensing
Throttling
5/8 cut off.
10 HP
Water per hour per Effective Horse Power.
120
110
100
90
80
70
60
50
40
30
20
10
0
0·6
0·7
0·8

No. of 5 Minute Intervals.	Non-condensing.			Remarks.
	Throttling 90 to 16 lbs. Set I. Pounds.	Throttling 90 to 20 lbs. Set II. Pounds.	Same Load Automatic Governor. Set III. Pounds.	
1	32	33½	30	Engine not stopped between I
2	31	34½	30	and II, and only for 8 minutes to
3	32	35	30	unclamp governor between II and
4	30	35½	30½	III.
5	30½	35	29½	Superheating in steam chest for
6	31½	35	30	I and II, about 17 degrees.

Under the method described above there is for each non-condensing test a companion condensing test at so nearly the same useful load that the cut-off is always a little shorter for the condensing test than for the non-condensing test; and it so appears upon the plate, which gives the curves of consumption per indicated horse power for 5% clearance.

Several theoretical curves for zero clearance are also given. These are calculated for a Mariotte expansion curve, assuming no cushion and release at 100% of stroke.

It may be observed that the condensing tests invariably show more economy, both for automatic cut-off action and throttling. In the throttling tests a thermometer was placed in the stationary part of the steam chest and another in the steam pipe, so that the superheating due to wire-drawing was determined as indicated on the plate. The steam contained about 3% of water at its entrance to the steam chest, due to the radiation from the steam pipe, as a thermometer at the boiler proved the steam to be about 6° superheated at that point.

The loss due to throttling is clearly shown to be a considerable amount, as shown quite conclusively to my mind by tests made several years ago by the late J. C. Hoadley; but as there appears to be considerable faith expressed at the present time in the ability of throttling regulation to compete with cut-off regulation, I have made these few throttling tests to reinforce Mr. Hoadley's data. The latter * are plotted upon the plate, but are not connected by a

*I am indebted to the courtesy of Mr. J. C. Woodbury for the results of Mr. Hoadley's tests.

curve. The plate also exhibits the results of Prof. Peabody's tests on the Porter-Allen and Corliss engines at the Massachusetts Institute of Technology. There is also shown the consumption curve for 90 lbs. pressure given in Mr. Emery's paper. The condition of the Buckeye engine was as follows:

1. With the fly-wheel clamped, and 90 lbs. of steam acting on the crank end of the piston, and the forward cylinder head removed, no leak past the piston rings could be detected; but there was a slight leak through the forward inlet port.

2. With the fly-wheel clamped, and either inlet-valve open so that steam at 90 lbs. pressure could run into one end of the cylinder and blow out through the indicator hole at that end—when the cut-off eccentric was pulled around by hand so as to shut off the entrance of steam to the cylinder, the blow at the indicator cock entirely ceased.

3. With the steam chest cover removed, and the valve at its middle position, 90 lbs. of steam through the open throttle valve, showed itself nowhere except at the lower corner of the forward end of the exhaust or main valve. At this point there was a slight blow of steam. An examination of the valve surfaces found them smooth and polished except at the leaky corner, where there were a few scratches.

4. Under the conditions last described, but with the steam chest cover on, the accumulation of steam in the condenser for one hour was determined to be 35 lbs. I believe that this leakage is greater than what occurs in the actual running of the engine, on two accounts:

1st. As the engine cooled off during the hour of time that the leakage was accumulating in the condenser, the rate of leakage increased, because of the increased percentage of water in the steam chest.

2d. When the valve is in rapid motion, the leakage through any small opening is either much reduced or entirely annulled.

On the whole, therefore, I regard the condition of the Buckeye engine as *practically perfect* regarding leakage, and the excellent economy shown by the non-condensing 5 % clearance curve of consumption on the plate certainly confirms this view. Prof. Peabody assures me that the valves of the Porter-Allen and Corliss engines, tested by him, were also tight, as were Mr. Hoadley's engines.*

* The latter had 10 % clearance, but compressed to from half to full boiler pressure.

In the light of the several curves on the plate, I am at a loss to see any ground for the support of the view that the Buckeye engine, on account of its steam chest being immersed in wet steam, is necessarily of inferior economy to engines in which the steam chest is stationary and exposed on three sides to the atmosphere. There seems, on the contrary, reason to believe that the wetness of the exhaust steam does not increase the rate of conduction through the surfaces of the main valve sufficiently at most to more than neutralize the advantage in conduction due to the fact that the difference in temperature between live steam inside the valve and the exhaust steam is less than the difference between the live steam and the atmosphere to which four out of five of the surfaces of a stationary rectangular steam chest would be exposed, whereas there is only one such surface in the case of the Buckeye engine.

Referring particularly to the mathematical treatment of the experimental curves, the formulæ of density in terms of the $\frac{24}{100}$ths power of the pressure is a valuable and interesting contribution to that subject. Also, the formula for E, which expresses the experimental water consumption for full stroke cut-off, is a very acceptable method of combining these particular curves. But the method of allowing for the effect of expansion by proposing that the consumption curve at all pressures is a straight line of constant inclination, equal to 22 in 100, is open to the objection that this inclination will vary with different engines in a manner determinable only by experiment. For example, the 7 × 14 Buckeye engine consumption curve has but about one-half this inclination.

If we are to determine the special inclination by experiment for each engine, it becomes a question whether the best use of the experimental curves is not to simply give us a table of values of the per cent. of water unaccounted for by the indicator, which may be applied as a correction to the ordinary calculation of steam consumption. It is doubtful whether it is possible to forecast the water consumption of any engine from data from another size of engine within 2 pounds, in view of the apparently infinite number of conditions upon which the cylinder condensation depends. There is, however, one deduction which seems to follow theory with satisfactory accuracy in all non-condensing engines, viz.: the point of most economical cut-off.

The following table shows this agreement for the case of Mr. Emery's curves. Column 3, calculated for 17 lbs. back pressure,

would average about as much greater than column 4 as it is now below the latter.

The law which here asserts itself represents the controlling influence of the ratio of back pressure to boiler pressure, which never fails to exert an effect proportional to theoretical forecast, in all varieties of steam engines under all practical conditions.

There is one thermodynamic point that I think it proper to mention, and that is regarding the estimation of the cost C_2. As Mr. Emery states that he expects a dispute on this point, I will not disappoint him. I cannot understand how it is necessary to differ with Mr. Isherwood's method of estimating the value C_3 if it is estimated at all, and I cannot understand the necessity of estimating its value anyway. I do not see that there is any.

Table showing ratios of expansion for maximum economy, when clearance is five per cent. Engine, non-condensing; Mariotte curve.

Gauge Pressure. lbs. per sq. in.	Ratio of Expansion r. Maximum Economy.	Equivalent cut-off. 5 per cent. clearance.	Cut-offs of Emery's Curves for Maximum Economy.	Terminal Pressures. lbs. per square inch.		Cut-off for Maximum Economy, if clearance = 0.
				By Formula.	By Curves.	
25	2.5	0.37	0.30	16	13	0.37
40	3.3	0.27	0.27	17	17	0.27
60	4.2	0.20	0.22	18	19	0.20
80	5.0	0.16	0.19	19	22	0.16
100	5.8	0.13	0.17	20	25	0.13

Formula for ratio, $r = \dfrac{1 + c}{\dfrac{14.7}{p_1} + c}$ when compression is zero.

c = clearance as a fraction of piston displacement.
p_1 = absolute initial pressure lbs. per sq. inch.
p_3 = " back " " " "

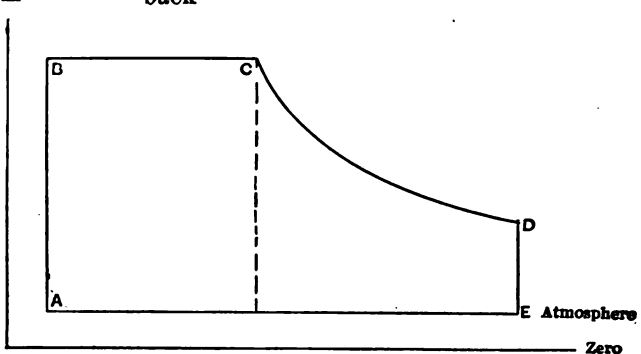

Fig. 94.

Also, the reference to the experiment of Mr. Barrus on the Dixwell engine does not seem to me any proof of the error of Mr. Isherwood's position, and with 3% possible error of the heat in the condenser, there is very little to be proved at all by the data to which Mr. Emery refers.

Mr. Barrus found that steam at 60 lbs. pressure absolute expanding to double its volume in an engine lost 64 thermal units per pound more than steam which did no work. Therefore the area (Fig. 94) $ABCDE = (p_1 \times BC) + p_1 \times BC \log 2 - 14.7 \times 144 \times AE$. Calculation gives $ABCD =$ about 70,000 ft. lbs. and $64 \times 772 =$ about 50,000, and an error of 3% in the total heat determination might make this either 25,000 or 75,000. I append an illustration and argument to sustain my criticism of the cost C_2.

Let a boiler, Fig. 92, contain a mass of water, A, and of steam, B, at 100 lbs. pressure above zero.

Let a piston, C, form part of the upper surface of the boiler.

Fig. 92.

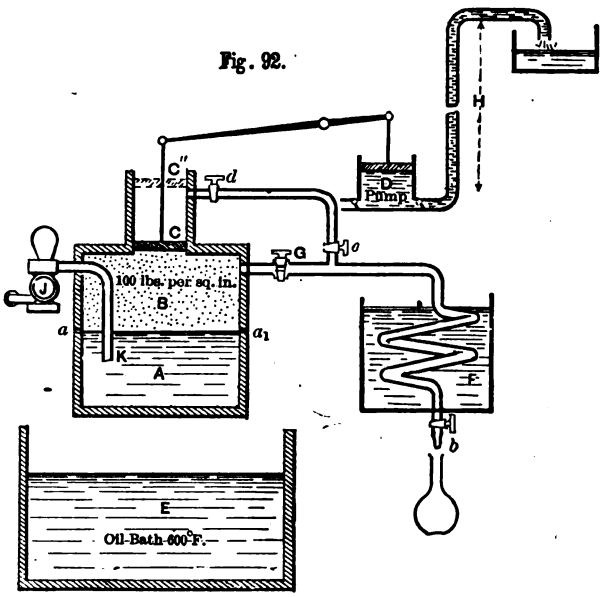

Let the area of the piston be 30.8 square inches, so that a resistance of 3,080 lbs. is required to hold the piston in place. Let this resistance be opposed by the atmosphere and the pump piston, D, which is subjected to a head of water, H.

Let the whole of the boiler be felted so as to be without loss of heat. Let the lower half of the boiler have its covering removable, so that it can be immersed in a reservoir of hot oil of sufficient

capacity to cause the evolution of steam described below. Let F be a calorimeter and J a feed pump. We then have i C a representative of the piston of a non-expansive, non-condensing steam engine.

EXPERIMENT I.

Immerse the boiler in the oil bath to the line aa, and open the cock G, so that steam may flow through it to the calorimeter, F, without altering the pressure in B, and simultaneously let water at 32° be introduced at K, by the pump J, equal in amount to the weight of steam flowing out at G.

When $\frac{1}{10}$ pound of condensed steam has collected in the flask f, close G, and simultaneously withdraw E, and restore the covering to A.

There will have disappeared from E, Q British thermal units. There will be collected in F, Q_1 British thermal units over the amount represented by the initial temperature of the calorimeter. There will be q thermal units remaining in the $\frac{1}{10}$ lb. of condensed steam in f reckoned above the 32° Fahrenheit. Since the heat contents of the boiler are unchanged it must follow that

$$Q = Q_1 + q.*$$

And since the calorimeter F represents Regnault's arrangement for determining the total heat of evaporation of steam, it must follow that $Q_1 + q$ will be 119.19 British thermal units as per Regnault's table.

EXPERIMENT II.

Replace the bath E and let the pressure in B increase an infinitely small amount above 100 lbs., thereby forcing the piston C upward to C'—a distance of 2 feet, the pump J supplying water as in Experiment I. Let the bath E be then withdrawn.

To fill the increased space in B caused by the movement of C will require that $\frac{1}{10}$ of a pound of water shall have been evaporated into steam. There will be precisely the same expenditure of heat from E, viz. 119.19 British thermal units, but there will have been allowed to pass outside of B such portion of this heat as is represented by the product of the area of $C \times 100$ lbs. $\times$ the two feet of travel of C.

This work $2 \times 100 \times 30.8 = 6{,}160$ foot pounds will have been

* This neglects the work done by the pump, J, which being but $\frac{1}{30}$ of one per cent. of the heat of evaporation, is not a necessary element of the discussion.

expended against the atmosphere and the head of water H, so that if the steam in the 2 ft. of space below C' be shut off from connection with the space B, and could all be run into the calorimeter F, through the cocks d and e, the heat collected in F and f would be $119.19 - \frac{2 \times 100 \times 30.8}{772}$ British thermal units.

Now, 30.8 sq. inches is 0.214 sq. feet, and 2×0.214 sq. feet is the volume of $\frac{1}{10}$ of one pound of steam at 100 lbs. pressure per square inch. Hence the group of figures $2 \times 100 \times 30.8$ may be written.

$100 \times 144 \times {}^{\circ}.428 =$ pressure of steam per square foot times volume of steam to fill cylinder $C\,C'$ in cubic feet.

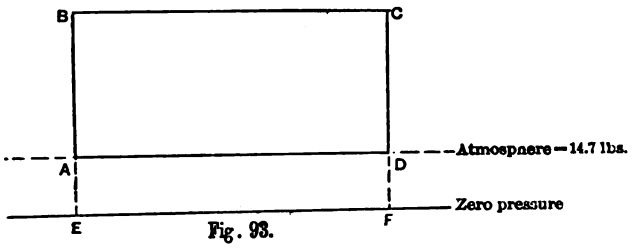

Fig. 93.

If therefore $ABCD$ is the indicator card of a non-condensing engine working without expansion, and $BE = p_1$ lbs. per sq. ft., $BC = V_1$ cubic feet and $Q =$ the total heat of evaporation by Regnault's tables for weight of steam $= \frac{1}{V_1}$.

Then

1. The useful work is $(p_1 - 14.7 \times 144)\ V_1$.
2. The cost of doing the work is Q British thermal units.
3. The heat in the steam at the instant of exhaust is $Q - p_1 v_1$, in which p_1 is measured to absolute zero.

Consequently, Mr. Emery's quantity C_1 should be equal to Regnault's total heat, less feed temperature, and his quantity C_2, if used at all, should be calculated equal to the total forward work, or to absolute vacuum. That is, C_1 should be Regnault's total heat, calculated from temperature of feed, and C_2 is as per Mr. Isherwood's view, but it is not needed as an element of the cost of the work $(p_1 - 14.7)\ V_1$.

Experiment III.

To cover the case of the Barrus test quoted. Suppose an air tight cover at C'', Fig. 92, and that the space between C and C' contained $\frac{1}{10}$ of one pound of steam at 100 lbs. pressure. Apply E as

before and cause C to rise, while at the same time the cocks d and e permit the steam between C_1 and C to be exhausted into the calorimeter. Then that part of the heat supplied by E (119.19 heat units), which in Experiment II. was directly dissipated against the atmosphere, will be collected as heat in the water of the condenser or calorimeter, F, as in Mr. Barrus' experiment. But this fact does not deny the law that the heat which has been spent in making the upward stroke of piston, C, is $p_1 V_1$. We temporarily collect a portion of this $p_1 V_1$, equal to the work of back pressure, in a mass of water, long enough to measure it, but it is immediately thereafter dissipated to the atmosphere, as in Experiment II.

Mr. W. M. Barr.—I should like to ask Mr. Emery a question —perhaps it lies outside of the paper—and that is in regard to the relative cost of power between compound engines and triple expansion engines; that is to say, whether there is a difference in economy in making a compound engine (non-condensing or condensing, as you like) in which the same ratio of expansion, beginning, we will say, with 150 pounds of steam pressure and expanding down to the atmosphere, and doing the work in two cylinders instead of three. The development of the triple expansion engine is brought about by a number of conditions which cannot be entered into here. In the first place, the favorite type of marine engine is a three cylinder engine; the reason for the engine being made with three cylinders is separate and apart from questions of economy, and antedates the modern triple expansion engine; it was originally designed with three cylinders so as to give a smooth motion to the ship. The same conditions would obtain very nearly in the case of a pumping engine having three cylinders instead of two. Now what I cannot get at exactly—because I do not know of any comparative experimental data on the subject in which the relative efficiencies of the two forms of engines are set forth, both using the same initial pressure, both doing the same quantity of work, and both expanding down to the same low pressure—is a comparison of the two types, the two cylinder and the three cylinder; or to re-state the question, Is the triple expansion under the same range of expansion any more economical in cost of power than a two cylinder compound? What I mean by cost of power is the amount of power developed for a given quantity of coal consumed.

Mr. Jerome Wheelock.—I would like to inquire of Mr. Emery if the type of engine he experimented with was similar to the one with which Prof. Denton experimented, and also what influ-

ence the Professor found that steam jacketing with exhaust steam exercised in his experiments.

Prof. Denton.—That was not touched upon, sir. I could not re-build the engine.

Mr. C. E. Emery.—Mr. Chairman: It is not possible to answer the various questions raised by Mr. Denton without more knowledge of the condition of the engine and of the details of the experiments. He acknowledges that the engine was leaky, which fact should vitiate all experiments on a strictly scientific basis. As hinted by Mr. Wheelock, the Buckeye engine used is of peculiar construction, being provided with a great valve with the live steam inside it and surrounded by exhaust steam. The method of balancing and general construction are such as to invite leakages of sufficient amount to vitiate the results of experiments with small consumptions of steam, and it is possible that the relative changes of temperature between the steam and exhaust under different conditions of working may make a difference in the shape of the valve, thereby varying the amount of leakage. The small engine used in the experiments by myself had an ordinary slide valve, which was scraped carefully to its seat and run until it was absolutely tight, as proved by experiments again and again. The cylinder ports were on the side and inclined toward the valve, so that every drop of water in the cylinder was carried out with the exhaust at each stroke, a condition of things secured in some engines nowadays, but by no means in all. The piston was also made tight, so that its movements were absolute measurements of the quantity of steam used under the particular conditions. The results obtained with the Buckeye engine, constructed in the peculiar way it is, and leaking when standing more than sufficient steam for one horse power, cannot properly be compared with the experiments from an absolutely tight engine presented by myself. Prof. Denton's experiments are interesting, and can properly be studied to see what changes take place in the use of a peculiarly constructed engine as compared with that of more ordinary type. When his experiments are plotted in the same form as those presented by myself it will be seen that the disagreement in the general shape of the curves is not great. The results substantiate the remarks given in the latter part of my paper (page 20), to the effect that the cost in some cases remains substantially the same through a large range of expansion. Some of the experiments show the effect also of a constant leak which operates to greatly increase the relative cost of

the power when the amount of the power is small. The engines that he experimented with developed, at the longer points of cut-off, very much more power than the experimental engine referred to in my paper, so that the saving due to increased power for a given amount of surface shown in my formula applies to reduce the relative cost of the power under such conditions. This explanation will also undoubtedly largely account for the difference found in the use of a vacuum. The paper states that with the low power and small engine used no gain was found by using a vacuum. With, however, the greater cylinder development at low powers and the greater actual power developed at other times in the Denton experiments, it is evident that the removal of the back pressure should make a great difference, as shown by his experiments. It is not possible to trace out all the irregularities shown in the experiments presented by Prof. Denton. Many of them must be considered mere puzzles due to abnormal conditions. On the whole, there is no contradiction in general results when the variations in conditions provided for in the formula are all considered. A series of formulæ applicable to condensing engines would not be nearly as simple as those presented, but it is understood that we at this time only attempted the non-condensing branch of the subject. We would again call attention to the fact that the formulæ do not dépend on the experiments in the small engine. Such experiments furnished mere starting points by showing the condensation under the particular conditions in that particular engine. A large number of other experiments were also considered and formed guides, by means of which the curve F was originally located on curves No. 2, but still other experiments were available at the time this paper was written, locating the curve for non-condensing engines of medium size below that, and showing, when compared with the theoretical curve—as has been stated distinctly—that the margin of saving with non-condensing engines is very slight.

Mr. Barr will please excuse me if in answering him I simply give some references on the subject. A full answer to the question would require going over the whole subject of compound and non-compound engines. He will find published in the *Journal of the Franklin Institute*, six or eight years ago, a series of tests made in vessels of my design under direction of Mr. Loring, of the navy, and myself, covering the same points he speaks of. There were three boats of the same size and same boiler power, but the engines were different. One was a high pressure condensing engine,

another was a low pressure condensing engine, and another a compound engine. The relative cost of the work done by each is set forth in that paper, and abstracts of it can be found in various publications. The results have, in fact, gone into current literature largely abroad.

In regard to the triple compound engine, there is plenty of information to be found in scraps through the technical journals abroad, but none where there is a direct comparison in such way as to show conclusively the exact saving by their use, separated from that due to other improvements. In discussing this subject at the Washington meeting, I simply worked back to the triple compound engine from the compound, in an article on the subject of "Cylinder Condensation," etc. By examining the results of the experiments, as published in *Engineering* and in the *Journal of the Franklin Institute* at the time, in connection with the articles more recently appearing in our own transactions, the information asked for by Mr. Barr will be found approximately.

I will add that even in non-condensing engines operated at high steam pressures, the increased cylinder condensation due to the differences of temperature, referred to in the paper above mentioned on "Cylinder Condensation," will undoubtedly take place, and therefore, as stated in the paper under discussion, it will probably be necessary as the pressure is increased to increase also the number of cylinders, making double-cylinder compound, triple compound, and even quadruple compound engines, as the pressures are raised more and more, so that the back pressure of the atmosphere has less and less influence on the result.

*The discussion of Prof. Denton, as sent for publication, contains much new matter which it is not practicable to examine closely at this time. It also includes replies to features of the discussion at the meeting which emphasize some of the conclusions stated in my original response. This is particularly the case with respect to the arrangement of the main valve of the Buckeye engine in a chest surrounded by exhaust steam. Prof. Denton concludes that since the difference of temperature between the live steam and the exhaust is less than between live steam and the air, the economy of the exhaust jacketed system should not be inferior. The fact is, that the difference of temperature is but one of the elements to be considered. The resistance of a metal plate, even though it be of cast iron and suitably thick, is comparatively small and the quan-

* Added since the meeting, under the rules.

ity of heat carried off is very nearly proportioned to the weight of refrigerating fluid which passes over the cooling surface. This was sufficiently proved in Prof. Richards' experiments with steam coils for heating currents of air, and the general result is familiarly known in many applications. It follows, therefore, that the quantity of heat which would be absorbed and carried away by currents of air moving with the velocity due to the differences of temperature about a steam chest would be very small compared to what would be carried off by a current of exhaust steam containing particles of water in suspension with an enormous capacity for heat. The oversight in the Professor's statement is evident on its face without lengthy discussion.

In response to the Professor's request for further details of the experiments with the small engine, I would call attention to the statements in the paper as to the way the experiments were plotted, and to the fact that all the customary data may be obtained from the curves except the speed of revolution, which was, on the average, 55 revolutions per minute. The general method of making these experiments is given in "Topical Discussions," page 375, Vol. VII., Trans. A. S. M. E., and there is also given there the cost of steam power in the small engine at different speeds of revolution when the engine was operated with a vacuum. I do not find that as complete a series was made on this point without a vacuum. The results of two experiments made without a vacuum, as given below, have, however, a direct bearing on the subject.

Average steam pressure, by gauge.....	80.0	80.0
" cut off.....	0.275	0.275
" revolutions per minute.....	47.43	97.18
Cost in lbs. water per H.P. per hour.....	38.334	32.71

The statement that there was no economy in the use of a co-denser with a small engine was a general one. A careful compil-tion of the various experiments would show what is stated gen-ally in the above discussion, that economy should be secured as cylinder development or power is increased. Evidences of will be seen by comparing the results of the experiments ab given with those in the "Topical Discussion" referred to. experiments with the higher powers show some economy du the vacuum, while those of lower powers do not. With l engines or still larger powers in the same engine undoubte vacuum would show economy in all cases.

CCCXX.

AN IMPROVED METHOD FOR FINDING THE DIAMETERS OF CONE AND STEP PULLEYS.

BY C. A. SMITH, PAWTUCKET, R. I.
(Member of the Society.)

THE diameters of cone and step pulleys must have certain relations to each other in order to make the belt run on them under the same amount of tension in all positions on the pulley. To determine these diameters correctly is the object of this paper.

The discussion will be divided in this paper into two parts for the convenience of the reader. The first will consist of brief rules, for the practical business man, for finding the correct diameters of cone and step pulleys. The second will give a brief history and analysis of the method.

It will be noticed that the order of the subjects is here reversed from that usually followed. When the rules and conclusions are interspersed all through the analysis it takes too much time for the hurried business man to boil the conglomeration down to the consistency required for his use; the consequence is that he loses much valuable matter because he has not the time to "dig for it." The endeavor will be to wait on the business man first and do the digging for him to some extent. The student and those wishing to know the why-wherefore-and-whence are referred to the latter part of this paper.

GRAPHICAL METHOD FOR CONE PULLEYS WITH OPEN BELT.

Case I.— *When the Greatest Belt Angle does not Exceed* 18°.

1. Referring to Figs. 36 and 37: Lay off the center distance, C or EF, and draw the circles, D_1 and d_1, equal to the first pair of pulleys which are always previously determined by known conditions.

2. Draw the line HI tangent to the circles D_1 and d_1.

3. From the point B, midway between E and F, erect BG perpendicular to EF.

4. Locate the point G by making $BG = .314C$; that is, multiply

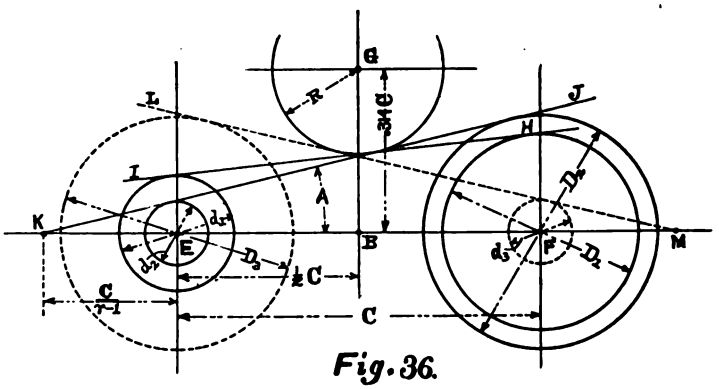

Fig. 36.

the center line, EF, by .314 and the product will be the height, BG, sought.

5. With G as a center draw a circle tangent to the line HI. Generally this circle will be on the outside of the belt line, HI, as shown in Fig. 36. When the center line, C, is short, and the

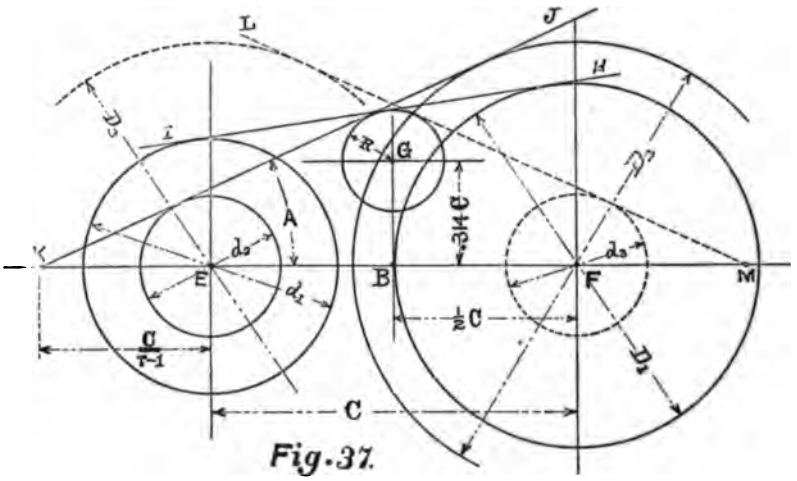

Fig. 37.

first pulleys, D_1 and d_1, are large, the circle will fall on the inside of the belt line, as shown in Fig. 37.

6. The belt line of any other pair of pulleys must be tangent to the circle G; hence any line as JK or LM drawn tangent to the

circle G will give the diameters D_2, d_2 or D_3, d_3 of the pulleys drawn tangent to these lines from the centers E and F.

7. To find any pair of diameters which will give any desired velocity ratio, let $r=\frac{D}{d}$; that is, r is the ratio obtained by dividing the larger diameter by the smaller one, or by dividing the larger of the desired speeds of the shafts by the speed of the other one. Locate the point K or M by making EK or $FM=\frac{C}{r-1}$; that is, subtract *one* from the desired ratio, r, and divide the center dis-

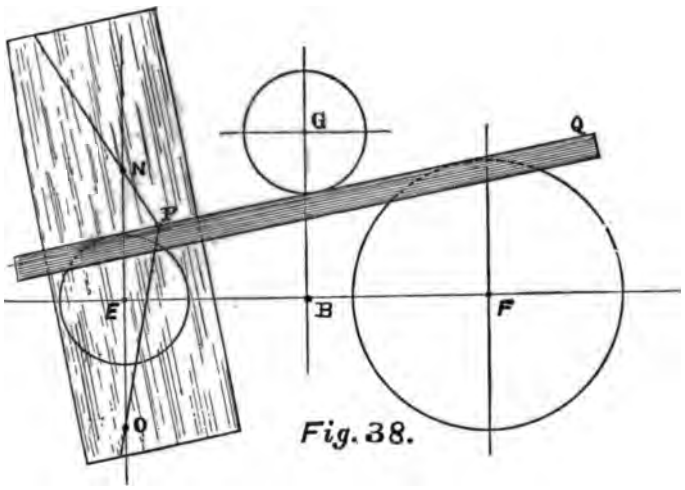

Fig. 38.

tance C by the remainder, the quotient will be the distance from E or F to a point K or M. From this point draw the line KJ or ML tangent to the circle G. The circles drawn tangent to this line with E and F as centers will give the desired velocity ratio, r, of the shafts E and F.

8. When the velocity ratio is near to unity, in which case the belt angle, A, is small, the point K falls so far away from E that it becomes very inconvenient, or impossible, to make use of this point K. In that case the following method will be available :—

Use a centrolinead, shown in Fig. 40, or improvise one as shown in Fig. 39, by fastening a piece of tracing material to a straight edge and drawing the lines OP and PN. To find the location o the points N, O and P, make $EN=EO=\frac{C}{10(r-1)}$; that is, *one-tenth* of the distance, EK, Figs. 36 and 37, as calculated above in

rule 7. Now make $EP=\frac{EN}{10}$ and draw the lines through the points N, P, O. On the diagram of the pulleys, as in Fig. 38, lay off the points N and O from the small pulley, making EN and EO the same as those distances in Fig. 39 or 40. Now place the centrolinead, Fig. 39 or 40, upon the diagram, Fig. 38, so that the line NP coincides with the point N, Fig. 38, the line OP with the point O, and the line or edge PQ tangent to the circle G as shown in Fig. 38. This gives the location of the belt line, PQ, to

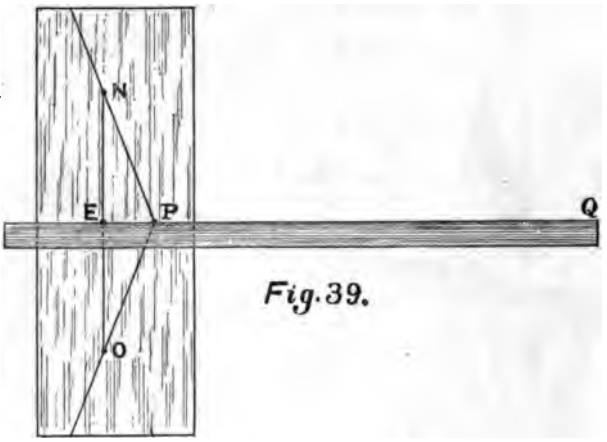

Fig. 39.

which the circles from the centers E and F are drawn tangent to give the pulley diameters of the desired ratio, r.

If one-tenth of EK, Figs. 36 and 37, should be too large to get on the drawing board, then any other convenient fractional part of EK may be taken for EN, Figs. 39 and 40, remembering, however, that *the same fractional part* of EN, Figs. 39 and 40, should be taken for EP. In other words, EN, Figs. 38, 39 and 40, must be a mean proportional between EK, Figs. 36 and 37, and EP, Figs. 39 and 40.

9. When the ratio, r, is unity, the belt line will be drawn parallel to the center line EF and tangent to the circle G, and its distance from the line EF will be half the diameter of the pulleys.

Case II.—*When the Greatest Belt Angle Lies Between* 18° *and* 30°.

Not more than 18° of arc of the directing circle G, Figs. 36 and 37, should be used on each side of the vertical line BG. When the cone pulleys are so proportioned that the belt angle, A, be-

comes greater than 18°, then the directing circle (or curve in this case) should be composed of two circular arcs on each side of the vertical line BG. We will only show the directing curve in this

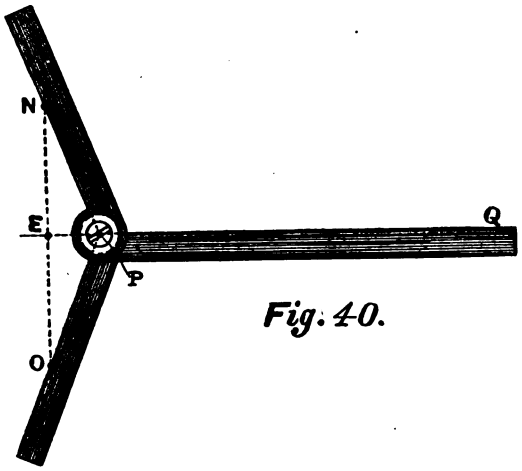

Fig. 40.

case, somewhat distorted in Figs. 41, 42 and 43, for the purpose of showing the different parts distinctly. Corresponding points and lines are designated by the same letters in all the diagrams for convenience in making comparisons. Description of one diagram applies equally to the others.

10. The process in this case is the same as in Case I., with the exception of a slight modification in rules 4 and 5. In addition

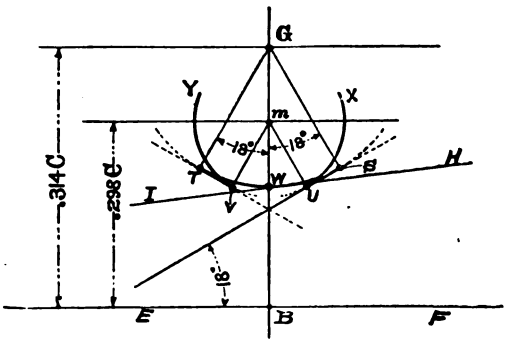

Fig. 41.

to the point G, as located by rule 4, locate another point, m, Figs. 41, 42 and 43, by making $Bm = .298C$. As seen in these diagrams the two points G and m may fall outside the belt line, HI, Fig. 41, corresponding to Fig. 36, or they may fall inside, Fig. 42,

corresponding to Fig. 37, or they may fall on opposite sides of the belt line as indicated in Fig. 43. Although the appearance

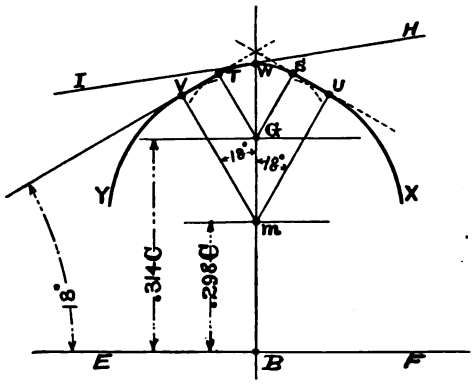

Fig. 42.

of the diagram is quite different in each of the three cases, the principle and process are the same.

11. Having drawn the first belt line *HI*, as in rules 1 and 2, proceed as follows: If the angle of *HI*, Figs. 41, 42 and 43, is less than 18° describe the arc *TWS* tangent to it from the center *G*. Now draw a straight line, *SU*, tangent to this arc, *WS*, making an

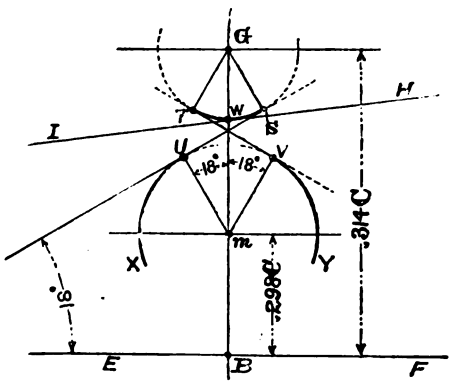

Fig. 43.

angle of 18° with the line of centers, *EF*. Tangent to this line, *SU*, draw another arc, *UX*, from the center *m*. These two arcs, *WS* and *UX*, constitute the directing curve and may be duplicated on the opposite side of *BG*, *WT* and *YV*, if desirable, but is not necessary.

If the first belt angle is greater than 18°, then the process is reversed, that is, the first arc is drawn tangent to the belt line from the center m instead of G; the line SU drawn tangent to

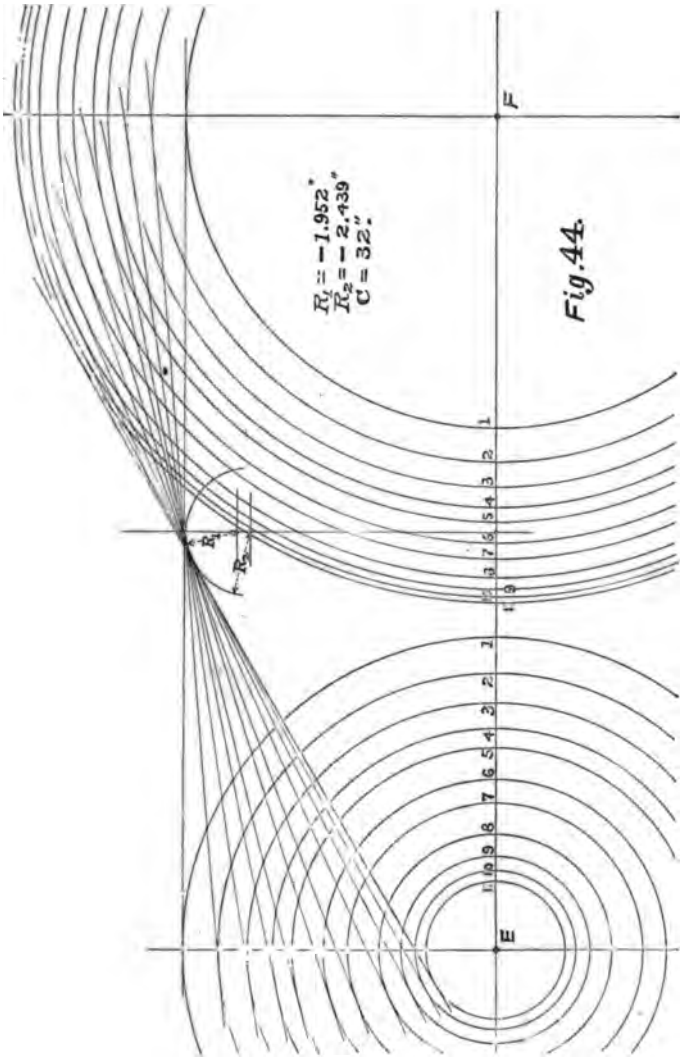

this arc at an angle of 18°; and the second arc, SW, is drawn tangent to this line from the center G.

The principle is, that all belt lines with an angle smaller than 18° are tangent to the arc WS, from the center G, while for all belt angles greater than 18° the belt line should be tangent to

the arc UX, whose center is at m. The complete construction is shown in Fig. 44, which is drawn to scale from example 1, page 291. The step pulleys corresponding to this example are shown in Fig. 53 and the cone pulleys in Fig. 54.

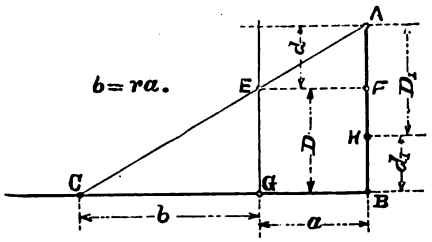

Fig. 45.

The method seems much more complicated from the description than it really is, and it takes a great deal more space and time to explain than to practice it. The work of laying out the diagram and finding the diameters is really quite simple when the different steps are once fixed in the mind.

GRAPHICAL METHOD FOR CONE PULLEYS WITH CROSSED BELT.

The solution for crossed belts is usually very simple by the

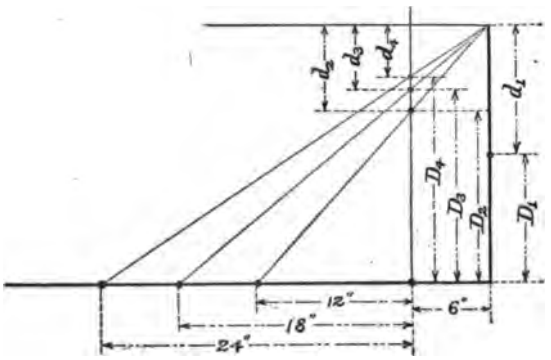

Fig. 46.

arithmetical process, but the following graphical method is very convenient.

1. Having determined the first pair of diameters, D_1 and d_1, from known conditions, lay off the line AB, Fig. 45, equal to the

sum of these diameters; that is, AH being equal to the diameter of the large pulley and HB the small one.

2. Draw the line CB at right angles to AB and erect the perpendicular EG at any convenient distance, $GB = a$, from B.

3. Lay off the point C, the distance $CG = b$ being obtained by multiplying the distance a by the desired velocity ratio, r, of the next pair of pulleys.

4. Connect A and C by a straight line. This will determine

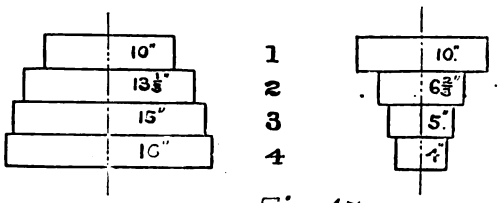

Fig. 47.

the intersection E. The lines $GE = BF$ and FA are the diameters of the pulleys sought, having the desired ratio, r, and will work properly with the first pair, BH and HA. Any number of steps may thus be determined. The line CA must always be drawn from the same point, A, wherever the location of the point C may be.

Fig. 46 shows the complete solution of a pair of cone pulleys, for crossed belt, shown in Fig. 47, D_1 and d_1 being each 10″ and the velocity ratios, 1, 2, 3 and 4.

MATHEMATICAL METHOD FOR CONE PULLEYS WITH OPEN BELT.

The following is an explanation of the symbols used in the succeeding formulæ and throughout this paper. When the letters are used without a subscript, they stand for the quantity in general. When the subscript, 1, 2, 3, etc., is attached to the letter it stands for the first, second, third, etc., quantity for a pair of cones represented by that letter.

A = The angle, in degrees, between the center line and the belt of any pair of pulleys.

a = .314 for belt angles less than 18° and .298 for belt angles between 18° and 30°. (See page 286.)

$B°$ = An angle depending upon the velocity ratio. See equation 3 and Fig. 50.

C = The center distance of the two pulleys.

D = Diameter of the larger and
d = " " " smaller of a pair of pulleys.

$E°$ = An angle depending upon $B°$ and some constants. See equation 4 and Fig. 50.

L = The length of the belt when drawn tight around the pulleys.

$r = \frac{D}{d}$; or the velocity ratio (the larger divided by the smaller).

R = A constant (radius of directrix). See equation 2 and Fig. 50.

1. . . . . $\sin A_1 = \frac{D_1 - d_1}{2\ C}$.

2. $\begin{cases} (a)\ R_1 = C\left\{ a \cos A_1 - \frac{(r_1 + 1)\ \sin A_1}{2\ (r_1 - 1)} \right\} \\ (b)\ R_1 = aC - \frac{1}{2} D_1, \text{ when } A_1 = 0 \text{ and } r_1 = 1. \\ (c)\ R_2 = R_1 + .0152C, \text{ when } A_1 \text{ is greater than } 18°. \\ (d)\ R_2 = R_1 - .0152C, \text{ when } A_1 \text{ is less than } 18°. \end{cases}$

3. . . . . $\tan B° = \frac{2a(r-1)}{r+1}$.

4. . . . . $\sin E° = \frac{R\ \sin B°}{aC}$.

5. . . . $\begin{cases} (a)\ A = B° - E°, \text{ when } R \text{ is positive.} \\ (b)\ A = B° + E°, \text{ when } R \text{ is negative.} \end{cases}$

6. . . $\begin{cases} (a)\ d = \frac{2C\ \sin A}{r-1}. \\ (b)\ d = 0.3183\ (L - 2C), \text{ when } A = 0 \text{ and } r = 1. \end{cases}$

7. . . . . $D = rd$.

8. . . $L = 2C \cos A + .01745d \left\{ 180. + (r-1)(90 + A) \right\}$.

In calculating the diameters of any pair of cones, equations 1 and 2 need be solved but once, as R_1 or R_2 is constant and is used in equation 4 for calculating all the steps.

From equation 1 we can obtain the belt angle of any pair of pulleys, which, substituted in 2 (a), gives the value of R_1 to be used in equation 4.

In all equations containing the quantity a, make $a = .314$ when A is less than 18°, and $a = .298$ when A lies between 18° and 30°.

For R, in equation 4, use the value of R_1, as obtained from

equation 2 (a) or 2 (b), until A arrives at the value of 18°, whether A_1 be greater or smaller than 18°. After A arrives at or passes 18°, use the value of R_2, instead of R_1, as obtained from equation 2 (c) if the first belt angle, A_1, is greater than 18°, and from 2 (d) if A_1 is less than 18°.

From equation 3 we obtain the value of $B°$ to be used in 4 and 5. Equation 4 gives the value of $E°$ to be used in 5, which in turn gives the value of A to be used in equation 6. This gives the diameter of the smaller pulley. The larger one is then obtained by multiplying the smaller one, d, by the ratio, r, as indicated by equation 7.

When equation 6 (b) must be used, the belt length, L, calculated from the first pair of pulleys, is obtained from equation 8.

In place of equation 6 (a) the following may be used if desirable:

$$9. \quad . \quad . \quad . \quad d = \frac{L - 2\ C \cos A}{.01745\ \{180. + (r - 1)\ (90 + A)\}}.$$

This equation is more accurate than 6 (a), but as it is more complicated we would not recommend it as a substitute. Equation 6 (a) gives such close results that practically nothing more accurate is needed. Equations 1 to 8 were used in calculating the tables of the examples given in the latter part of this paper, which may be compared. It will be noticed that the belt length on the different steps is so near constant that, really, nothing more accurate is desirable.

FORMULÆ FOR CONE PULLEYS WITH CROSSED BELT.

$$10. \quad . \quad . \quad . \quad . \quad . \quad . \quad . \quad . \quad d = \frac{D_1 + d_1}{r + 1}.$$

$$11. \quad . \quad . \quad . \quad . \quad . \quad . \quad . \quad . \quad D = rd, \text{ or}$$

$$12. \quad . \quad . \quad . \quad . \quad . \quad . \quad . \quad . \quad D = D_1 + d_1 - d.$$

All the previous formulæ and methods for finding the diameters of cone pulleys do not take into account the thickness of the belt. This should be allowed for to obtain the correct speeds. The diameters calculated are those of the neutral line of the belt. By the neutral line we mean the line at which the belt is neither stretched nor compressed as it passes around the pulley. This line is usually 0.4 of the thickness of belt from the face of the pulley, hence 0.8 of the thickness of belt should be subtracted

from the calculated diameter to obtain the actual diameter of the pulley. The majority of small belts are about $\frac{3}{16}''$ thick, hence we may say that generally

$$\left\{\begin{matrix}\text{Actual diameter}\\ \text{of pulley}\end{matrix}\right\} = \left\{\begin{matrix}\text{Calculated diameter}\\ \text{of pulley}\end{matrix}\right\} - \left\{0.15'' \text{ or } \tfrac{5}{32}''\right\}$$

ORIGIN AND DEVELOPMENT OF THE PRESENT METHOD.

The subject of cone pulleys seems to be more or less of a mystery to most mechanics. Outside of our own experience we can find plenty of evidence of this in the queries which repeatedly appear, on the subject, in technical journals. That the subject is really a difficult one is evidenced by the fact that nearly all writers who have treated the subject give us rules and formulæ which are so limited in their application, or so inaccurate in their results, that they are of little or no practical use whatever.

The first revelation I had of the difficulty of the problem was in the early days of my mechanical experience—when I had my first step pulleys to design. It was shortly after I entered the employ of a new shop. The manager of the concern, at some previous time, had designed a pair of step pulleys for a certain machine. He came to me and said that those pulleys were not right; that the belt was loose on some of the steps and he had to provide a belt tightener to make it go. Now he wanted me to "lay out a pair of cones" for a similar machine, and proportion the diameters so that the belt would be tight on all the steps and give the desired speeds. In "collecting my thoughts" to begin on the job, it was found that I knew less of the subject than I previously thought possible. I had an idea that all that was required was, to have the steps on the two cones the same. I soon learned that this might do for a crossed belt, but would be far from the mark in case of an open belt. The manager brought some of his mechanical books and showed me some tables which were supposed to solve the whole mystery. But I could not use the tables, as all the data were given in terms of the *difference of diameters*, which was an unknown quantity in this case (and is in all cases), as it was the ratio of speeds or diameters that was known. I next consulted "Rankine," but found that his formulæ were given as "nearly correct for equal cones only," and were therefore not applicable. Subsequent research revealed nothing better. As I had no time then to study useless formulæ,

I proceeded to solve the problem the best way known to me then. Assuming a pair of diameters having the desired ratio I drew the circles at the proper center distance, and with a pair of small dividers stepped off the length of the belt. I then drew another pair of circles of the next given ratio, guessing at the diameter of one of them. This guessing was repeated until a pair of circles were found which gave the same length of belt as the first pair. The other steps were determined in the same manner. This was a slow process, but a much more satisfactory one than the use of uncertain formulæ or tables. Since then I have studied the subject a great deal, finding nothing more satisfactory up to the present time, than the method developed in this paper.

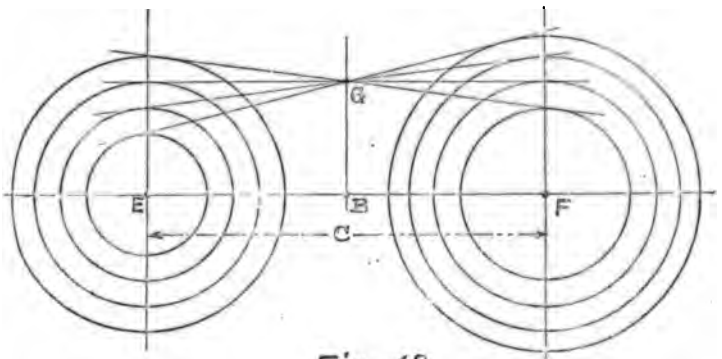

Fig. 48.

As far as I can trace the development of the present method, it seems to have originated with a Mr. Otto Fuchs, of Boston. The substance of his method is given in Fig. 48, *EF* being laid off to the correct center distance, *C*, and the circles representing the pulleys are drawn with such diameters as will make all the belt lines pass through the point *G* on the line *GB*; *B* being midway between *E* and *F*. This method was published in the *American Machinist* of Feb. 5, 1881, and republished by Prof. John E. Sweet in the same paper of Sept. 17, 1881. This latter publication attracted my attention, and I became sufficiently interested in the same to work up several examples and calculate the belt length for every step to see how near they all agreed. I found considerable discrepancy—more than would be allowable in practice. By studying the belt lengths thus obtained I noticed that it would be in the right direction, to obtain closer approximations, if all the belt lines were made to come tangent to a circle (or some

curve) as at *G*, Fig. 49, instead of passing through a point as in Fig. 48. The question then arose, if a circle will answer, how must it be located, and what should be its radius? The study of this question resulted in a method published in the *American Machinist* of Feb. 25, 1882, and republished in "A Treatise on Belts and Pulleys," by J. Howard Cromwell, Ph. B. The method is substantially as represented in Fig. 49, where the location of the center *G* of the directing circle is given from the *small pulley.* Otherwise the process is the same as described by rules 1 to 8, including a belt angle up to 30°. I have learned, however, that my description of the method has been misunderstood in some cases. Although I stated in italics that the line

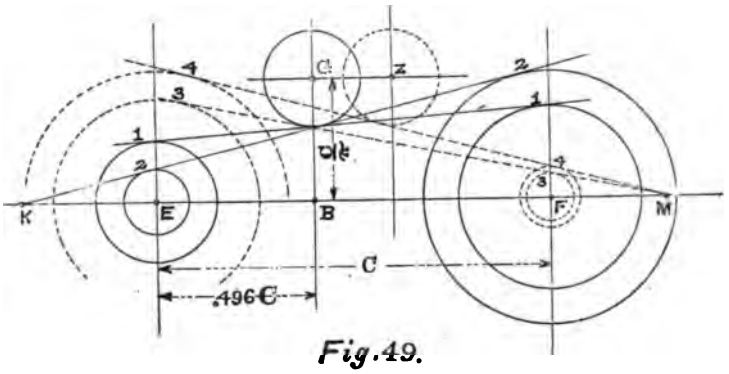

Fig. 49.

GB, Fig. 49, should be located ".496 *C* from the center of the *smaller pulley*," *E*–1, the same directing circle, *G*, was used in case where the *smaller pulley* of a pair was transferred to the other center, *F*, in which case the pair of circles, *E*–3 and *F*–3, were obtained. Upon a little reflection it must be seen that this is wrong. When the *smaller pulley* of a pair changes centers, then the directing circle, *G*, must also be changed to the position *Z*, so that it will still be ".496 *C*" from the center of the *smaller pulley.* Otherwise it would be .496 *C* from the center of the *larger pulley*, which is contrary to the original instructions. The directing circle, *Z*, gives the correct diameters, *E*–4 and *F*–4, in place of *E*–3 and *F*–3. Of course there is no necessity of changing from one center to the other, as all the diameters can be found from one side as well, but some people have an idea that it must be done so. In the present paper the method has been so modified as to avoid the possibility of the above misunderstanding, and also to make it more accurate, by locating the line *GB* midway between

the centers of the pulleys E and F, and using two circular arcs, instead of one, for the directing curve, as has already been explained in the rules given.

The formulæ, by means of which the accuracy of the method was tested, were deduced as follows:

In Fig. 50 let E and F be the centers of any pair of pulleys and G the center of directrix to which the belt lines are to be tangent. GB is assumed to be equal to aC, a being some unknown constant for the time being. From the diagram we have

$$\frac{HF}{IE} = \frac{KF}{KE}$$

but $$HF = \tfrac{1}{2}D \text{ and } IE = \tfrac{1}{2}d \therefore \frac{HF}{IE} = r,$$

also $$KF = KE + (EF = C).$$

Substituting above we have

$$r = \frac{KE + C}{KE}$$

from which we obtain

13. . . . . $$KE = \frac{C}{r - 1}$$

as indicated in the diagram. From the right-angled triangle KEI we have

$$EI = KE \sin A, \text{ or}$$

14. . . . . $$d = \frac{2\,C \sin A}{r - 1} \text{ [equation 6 } (a)\text{].}$$

This would give us the diameter of the small pulley at once if

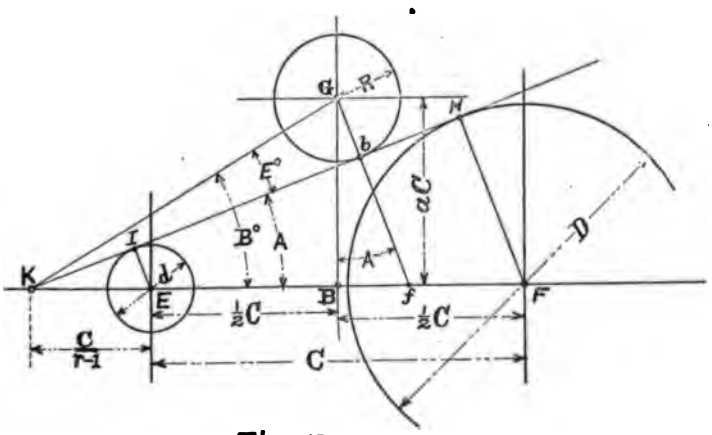

Fig. 50.

we knew the value of the belt angle, A, but this being an unknown quantity we will have to find some equivalent of it in known terms. $A = ?$

From the diagram we have

15. . . . . $A = B^\circ - E^\circ$ [equation 5 (a)].

But B° and $E^\circ = ?$

From the triangle KBG we have

$$\tan B^\circ = \frac{GB}{KB} = \frac{aC}{\frac{C}{r-1} + \frac{1}{2}C} \quad \text{or}$$

16. . . . . $\tan B^\circ = \frac{2a(r-1)}{r+1}$ (equation 3).

From the triangle KGb (Gf being drawn at right angles to KH).

$$\sin E^\circ = \frac{Gb}{KG} = \frac{R}{KG}.$$

$$\text{But } KG = \frac{GB}{\sin B^\circ} = \frac{aC}{\sin B^\circ} \therefore$$

17. . . . . $\sin E^\circ = \frac{R \sin B^\circ}{aC}$ (equation 4).

But $R = ?$

To find the radius, R, of the directing circle we have

$$R \doteq Gb = Gf - bf.$$

$$\text{But } Gf = \frac{GB}{\cos A} = \frac{aC}{\cos A} \text{ and}$$

$$bf = Kf \sin A = (KB + Bf) \sin A =$$

$$\left(\frac{C}{r-1} + \tfrac{1}{2}C + Bf\right) \sin A$$

$$Bf = GB \tan A = aC \tan A \therefore$$

$$bf = \left(\frac{C}{r-1} + \tfrac{1}{2}C + aC \tan A\right) \sin A.$$

Substituting above and reducing we have

$$R = \frac{aC}{\cos A} - \left(\frac{C}{r-1} + \tfrac{1}{2}C + aC \tan A\right) \sin A =$$

$$\frac{aC}{\cos A} - \frac{C \sin A}{r-1} - \frac{C \sin A}{2} - \frac{aC \sin^2 A}{\cos A} =$$

$$\frac{aC}{\cos A}\left(1 - \sin^2 A\right) - C \sin A \left(\frac{1}{r-1} + \tfrac{1}{2}\right) =$$

$$aC \cos A - C \sin A \frac{r+1}{2(r-1)}. \text{ Since } 1 - \sin^2 A = \cos^2 A \text{ ;} \therefore$$

18. . . . . $R = C\left\{a \cos A - \frac{(r+1) \sin A}{2(r-1)}\right\}$

As R is supposed to be a constant we may calculate its value by using the ratio and belt angle of the first pair of pulleys; hence we may write

19. . $R_1 = C\left\{a \cos A_1 - \frac{(r_1+1) \sin A_1}{2(r_1-1)}\right\}$ [equation 2 (a)].

Before R_1 can be determined we must know the value of A. From the triangle KIE we have

20. . . . $\sin A = \frac{EI}{KE} = \frac{d(r-1)}{2C} = \frac{D-d}{2C}$.

Or since this equation is true for any pair of pulleys,

21. . $\sin A_1 = \frac{d_1(r_1-1)}{2C} = \frac{D_1 - d_1}{2C}$ (equation 1).

Combining equations 19 and 21 we have

$$R_1 = C\left\{a \cos A_1 - \frac{(r_1+1)(r_1-1)d_1}{2(r_1-1)2C}\right\}, \text{ or}$$

$$R_1 = C\left\{a \cos A_1 - \frac{(r_1+1)d_1}{4C}\right\}.$$

Now, when the two pulleys are equal, then $D_1 = d_1$, $r_1 = 1$, and $A_1 = 0$, in which case the above equation reduces to

22. . $R_1 = C\left(a - \frac{d_1}{2C}\right) = aC - \tfrac{1}{2}D_1$ [equation 2 (b)].

R may be either negative or positive, depending upon the relative numerical values of the positive and negative terms in equations 19 and 22. When it is negative then E° will be nega-

tive, equation 17, and the sign in equation 15 will be positive, as indicated in equation 5.

The constant a was determined empirically, and was found to give the best results by giving it two values: the first 0.314, to be used in the equations as long as the belt angle, A, is below 18°; and the second, 0.298, for angles between 18° and 30°. For greater angles than 30° the method was not tested, as it is supposed that a greater angle will very seldom, if ever, be used in practice.

Since equation 19 contains the quantity a, it will be necessary to calculate two values for R in any case where the belt angles lie on both sides of 18°. The easiest way to calculate the second value of R (R_2) is indicated in Fig. 51. When A_1 is less than 18°, then R_1 is represented by the line GS, its center being at G, from which the arc WS is described tangent to HI, the belt line of D_1 and d_1. R_2 is represented by the line mU. The arc UX, described with this radius from the center m, is tangent to the line US, which is tangent to the first arc, WS, and is drawn at an angle of 18° with the center line EF. All the belt lines whose angles are less than 18° are tangent to the arc WS, and all those greater than 18° are tangent to UX. Now, from the diagram we have

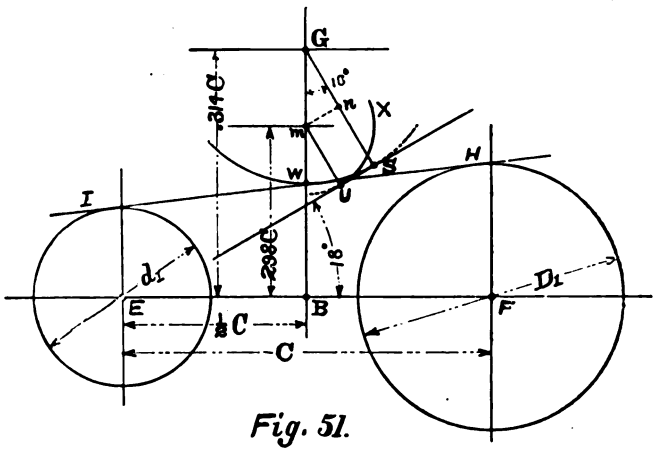

Fig. 51.

$$mU = GS - Gn, \text{ or}$$

$$R_2 = R_1 - Gn = R_1 - Gm \cos 18°; \text{ but}$$

$$Gm = BG - Bm = .314C - .298C = .016C; \therefore$$

23. . . $R_2 = R_1 - .0152C$ [equation 2 (d)].

When A_1 is greater than 18° then $R_1 = m\,U$, and $R_2 = GS$, whence

24. . . $R_2 = R_1 + .0152C$ [equation 2 (c)].

Equation 23 should be used when the belt angle, A, passes the 18° point from a smaller to a greater angle, and equation 24 when it passes 18° from a greater to a smaller angle. Care should be taken, however, to assign to R_1 its proper sign, as it may be either positive or negative, as previously explained. When R_1 and R_2 are both positive, the centers G and m will both be outside of the belt line, and the diagram will take the form of Figs. 36, 41, 49, 50. When R_1 and R_2 are both negative, the centers will both be inside the belt line, as in Figs. 37, 42 and 44 (see also example 1). When one is positive and the other is negative, then they will lie on opposite sides of the belt line, as shown in Fig. 43. Example 4 illustrates this case.

All the formulæ are now complete with the exception of equation 14. This reduces to an indeterminate form when the two pulleys become equal ($A = 0$ and $r = 1$), and will give us no result. To provide for this case we can find the proper value of d from the formula for the length of belt.

Referring to Fig. 52, the length of an open belt is

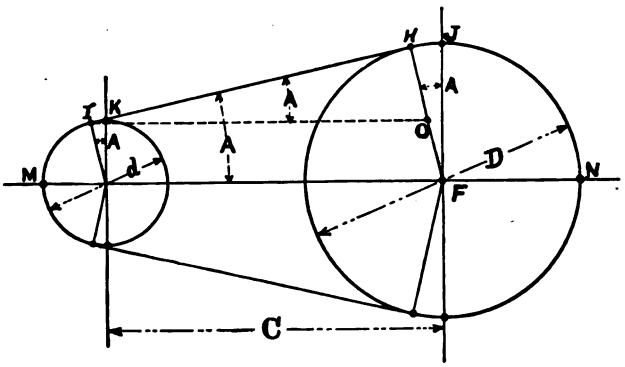

Fig. 52.

$$L = 2\,(MI + IH + HJ + JN)\text{; but}$$

$$MI = MK - IK = \frac{\pi d}{4} - \frac{\pi d A}{360}.$$

$$IH = IO \cos A = C \cos A.$$

$$HJ = \frac{\pi DA}{360}$$

$$JN = \frac{\pi D}{4}.$$

Substituting these values in the first equation, we have

$$L = 2\left(\frac{\pi d}{4} - \frac{\pi dA}{360} + C \cos A + \frac{\pi DA}{360} + \frac{\pi D}{4}\right) =$$

$$L = \frac{\pi d}{2} - \frac{\pi dA}{180} + 2C \cos A + \frac{\pi DA}{180} + \frac{\pi D}{2} =$$

$$L = \frac{\pi}{2}(D + d) + \frac{\pi A}{180}(D - d) + 2C \cos A.$$

Putting this in a more convenient form,

$$L = \frac{\pi}{2}(r+1)d + \frac{\pi A}{180}(r-1)d + 2\,C \cos A =$$

$$2\,C \cos A + \frac{\pi d}{2}\left(r + 1 + \frac{A}{90}(r-1)\right) =$$

$$2\,C \cos A + \frac{\pi d}{2}\left(r + 1 - 2 + 2 + \frac{A}{90}(r-1)\right) =$$

$$2\,C \cos A + \frac{\pi d}{2}\left(2 + (r-1) + \frac{A}{90}(r-1)\right) =$$

$$2\,C \cos A + \frac{\pi d}{2}\left(2 + (r-1)\left(1 + \frac{A}{90}\right)\right) =$$

$$2\,C \cos A + \frac{\pi d}{180}\left(180 + (r-1)(90 + A)\right) =$$

25. $L = 2\,C \cos A + .01745\,d\left(180 + (r-1)(90 + A)\right)$ (Equation 8).

This equation, 25, will give the length of the belt mathematically correct, the value of A being obtained from equation 20. Solving equation 25 for d we have

26. . . $d = \dfrac{L - 2\,C \cos A}{.01745\,[180 + (r-1)(90 + A)]}$ (equation 9).

Making $A = 0$ and $r = 1$, this equation reduces to

27. . . . $d = 0.3183\ (L - 2\ C)$ (equation 6 [*b*].)

This will give the correct value of d when $r = 1$, the value of L being obtained from equation 25, the data necessary being obtained from the first pair of pulleys D_1 and d_1.

The equations needed in solving any problem of cone pulleys have been collected and are given in this paper in the order in which it is most convenient to make the calculations.

These formulæ being based upon the graphical method already explained, the accuracy of the former as well as the latter will be seen by comparing a few examples, calculated from them (equations 1 to 8). But it was also thought desirable to know how these would compare with some of the previously existing formulæ. For this purpose I have selected formulæ from two authors, the only ones which I have seen, so far, that have a general and practical form, being dependent upon the velocity ratio. I will repeat them here for convenience and transpose them to the notation of this paper.

The approximate formulæ given by J. Howard Cromwell in his "Treatise on Belts and Pulleys," page 55, are as follows:

28. . . . . $\Delta = d\,(r - 1)$.

29. . . . . $d\,(r + 1) = S_1 + \dfrac{\Delta_1^2 - \Delta^2}{2\,\pi\,C}$.

In which $\Delta = D - d$ and $S_1 = D_1 + d_1$.

But these equations are in an unsolved condition, and inconvenient to apply as they are. Combining equations 28 and 29, and solving for d we have:

30. $$d = \sqrt{\frac{2\pi C S_1 + \Delta_1^2}{(r-1)^2} + \left\{\frac{\pi C(r+1)}{(r-1)^2}\right\}^2} - \frac{\pi C(r+1)}{(r-1)^2}.$$

When $r = 1$ then

31. . . . . $d = {}^1S_1 + \dfrac{\Delta_1^2}{4\pi C}$.

The following approximate formulæ have been taken from "Elements of Machine Design," by W. Cawthorne Unwin.

32. . . . . $\Delta = \dfrac{(r - 1)S_1}{r + 1}$.

33. . . . . $S = S_1 + \frac{\Delta_1^2 - \Delta^2}{4 \pi C}$.

34. . . . . $d = \frac{S}{r + 1}$.

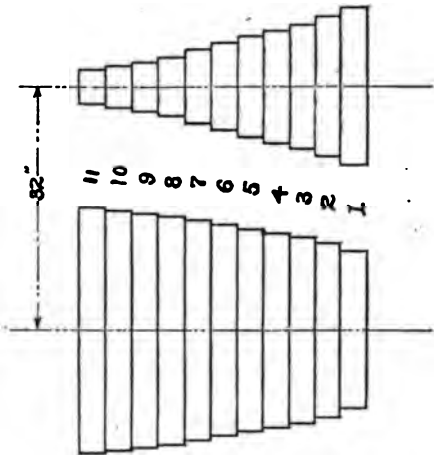

Fig. 53.

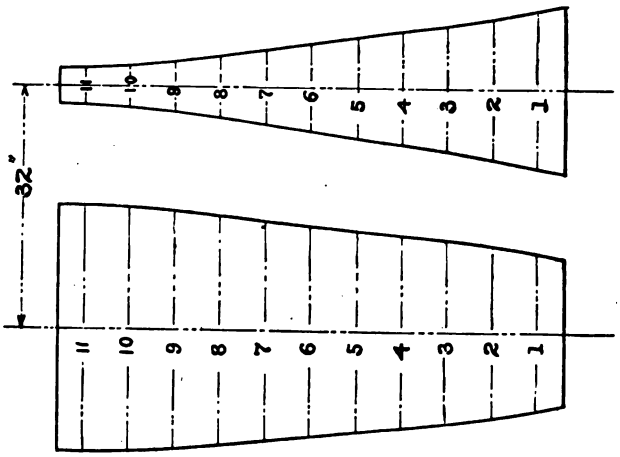

Fig. 54

The relative accuracy of these formulæ can be seen by comparing the following tables, which were calculated from them. The tables will explain themselves. Great care was taken to have these tables accurate by the use of the logarithmic tables of Baron Von Vega.

EXAMPLE 1.

AS CALCULATED BY THE NEW METHOD, FORMULÆ 1 TO 8.

Center Distance, $C = 32''$.

Steps	d	D	r	L	a	R	$B°$	$E°$	A
1	24.	24.	1.	139.3982	.314	—1.952	0°	0°	0°
2	21.2706	26.5882	1.25	139.3979	"	"	3°, 59′, 29″	0°, 46′, 29″	4°, 45′, 58″, = 4.7661°
3	19.0202	28.5303	1.50	139.4002	"	"	7°, 9′, 30″	1°, 23′, 14″	8°, 32′, 44″, = 8.5455°
4	17.1570	30.0247	1.75	139.4115	"	"	9°, 43′, 10″	1°, 52′, 46″	11°, 35′, 56″, = 11.5989°
5	15.5950	31.1900	2.	139.3986	"	"	11°, 49′, 20″	2°, 16′, 52″	14°, 6′, 12″, = 14.1033°
6	13.1548	32.8570	2.5	139.3872	"	"	15°, 3′, 50″	2°, 53′, 38″	17°, 57′, 28″, = 17.9556°
7	11.3547	34.0641	3.	139.4154	.298	—2.439	16°, 35′, 40″	4°, 11′, 20″	20°, 47′, 0″, = 20.7833°
8	8.8868	35.5472	4.	139.4332	"	"	19°, 40′, 40″	4°, 56′, 26″	24°, 37′, 6″, = 24.6183°
9	7.2859	36.4295	5.	139.4243	"	"	21°, 40′, 10″	5°, 25′, 10″	27°, 5′, 20″, = 27.0889°
10	6.1681	37.0086	6.	139.4042	"	"	23°, 3′, 30″	5°, 45′, 0″	28°, 48′, 30″, = 28.8083°
11	5.3454	37.4178	7.	139.3883	"	"	24°, 5′, 0″	5°, 59′, 30″	30°, 4′, 30″, = 30.0750°

Maximum difference in the length of belt = .046″.

EXAMPLE 1.

AS CALCULATED BY J. H. CROMWELL'S FORMULA, EQUATION 30.

Center Distance, $C = 32''$.

Steps.	d	D	r	L	A
1	24.	24.	1.	139.3982	0°
5	15.5973	31.1946	2.	139.4085	14°, 6′, 20″ = 14.1056°
8	8.8921	35.5684	4.	139.4676	24°, 38′, 2″ = 24.6339°
11	5.3576	37.5082	7.	139.5799	30°, 9′, 0″ = 30.1500°

Maximum difference in the length of belt = .1817

EXAMPLE 1.

AS CALCULATED BY UNWIN'S FORMULÆ, EQUATION 32 to 34.

Center Distance, $C = 32''$.

Steps.	d	D	r	L	A
1	24.	24.	1.	139.3982	0°
5	15.7878	31.5756	2.	140.3552	14°, 16′, 50″ = 14.2806°
8	9.3937	37.5748	4.	144.0728	26°, 7′, 30″ = 26.1250°
11	5.5971	39.1797	7.	143.3639	31°, 39′, 0″ = 31.6500°

Maximum difference in the length of belt = 4.6746″.

EXAMPLE 2.

AS CALCULATED BY THE NEW METHOD, FORMULÆ 1 to 8.

Center Distance, $C = 100''$.

This example was taken from Cromwell's "Treatise on Belts and Pulleys."

Steps.	d	D	r	L	a	R	$B°$	$E°$	A
1	8.	24.	3.	250.9011	.314	23.2993	.....	.....	4°, 35′, 19″ = 4.5886°.
2	10.7383	21.4766	2.	250.8914	"	"	11°,49′,20″	8°, 44′, 40″	3°, 4′, 40″ = 3,0778°
3	16.2023	16.2023	1.	250.9010	"	"	0°	0°	0°

Maximum difference in the length of belt = .0097″.

EXAMPLE 2.

AS CALCULATED BY J. H. CROMWELL IN HIS TREATISE ON BELTS AND PULLEYS, PAGE 55.

Center Distance, $C = 100''$.

Steps.	d	D	r	L	A
1	8.	24.	3.	250.9011	4°, 35′, 19″ = 4.5886°
2	10.76	21.52	2.	250.9949	.3°, 5′, 2″ = 3.0839°
3	16.204	16.204	1.	250.9064	0°

Maximum difference in the length of belt =.0938″.

EXAMPLE 2.

AS CALCULATED BY UNWIN'S FORMULÆ, EQUATIONS 32 to 34.

Center Distance, $C = 100''$.

Steps.	d	D	r	L	A
1	8.	24.	3.	250.9011	4°, 35′, 19″ = 4.5886°
2	10.7044	21.4088	2.	250.7300	3°, 4′, 5″ = 3.0681°
3	16.1019	16.1019	1.	250.5856	0°

Maximum difference in the length of belt = .3155″.

EXAMPLE 3.

AS CALCULATED BY THE NEW METHOD, FORMULÆ 1 TO 8.

Center distance, $C = 41.625''$.

This example was taken from a machine upon which a crossed and an open belt were used on the same cones at different times. The diameters taken from the drawings are

$$\left\{ \begin{array}{ll} d - 4.5'', & 6.'', 7.5'' \\ D - 12. & 10.5'', 9'' \end{array} \right\}.$$

It will be seen that these are correct for crossed belt.

Under the conditions under which the pulleys were used, it would have been better to have taken the mean between the open belt diameters and those of the crossed belt.

Steps	*d*	*D*	*r*	*L*	*a*	*R*	*B°*	*E°*	*A*
1	4.5	12.	2¼	109.5061	.314	8.892	.....	.....	5°, 10′, 7″ = 5.1686°
2	6.0490	10.5875	1.75	109.4989	"	"	9°, 43′, 8″	6°, 35′, 42″	3°, 7′, 26″ = 3.1222°
3	7.5983	9.1121	1.20	109.5049	"	"	3°, 16′, 3″	2°, 13′, 20″	1°, 2′, 43″ = 1.0453°

Maximum difference in the length of belt = .0072″.

EXAMPLE 4.

AS CALCULATED BY THE NEW METHOD, FORMULÆ 1 to 8.

Center distance, $C = 13.5''$.

This example was taken from the countershafts of a machine, and the cones were laid out by a young man according to the writer's former graphical method, illustrated in Fig. 49. The following are the diameters taken from the drawings :

First Cone — 2.″, 3.75″, 5.5″, 7.125″, 8.625″, 10.125″.
Second Cone — 13.″, 11.875″, 10.625″, 9.25″, 7.75″, 6.125″.

Steps	*d*	*D*	*r*	*L*	*a*	*R*	*B°*	*E°*	*A*
1	2.	13.	6.5	52.8345	.298	- .076005	.....	.....	24°, 2′, 31″ = 24.0419°
2	3.7555	11.8925	3.1667	52.8150	"	"	17°, 13′, 10″	0°, 19′, 14″	17°, 32′, 24″ = 17.5400°
3	5.5005	10.6283	1.9318	52.8237	.314	+ .12987	11°, 17′, 20″	0°, 20′, 37″	10°, 56′, 43″ = 10.9453°
4	7.1238	9.2547	1.2982	52.8190	"	"	4°, 39′, 30″	0°, 8′, 33″	4°, 30′, 57″ = 4.5158°
	D	*d*							
5	8.6553	7.7772	1.1129	52.8264	"	"	1°, 55′, 19″	0°, 3′, 30″	1°, 51′, 49″ = 1.8636°
6	10.1247	6.1247	1.6531	52.8213	"	"	8°, 47′, 1	0°, 16′, 5″	8°, 31′, 11″ = 8.5197°

Maximum difference in the length of belt = .0195″.

APPENDIX.

It has been my object, in the above paper, to reduce it to the most simple form possible without sacrificing any of the accuracy of the methods presented. Since writing the paper I have noticed that the mathematical part—formulæ 1 to 8—can be simplified still more. That is, the number of the equations necessary can be reduced as follows:

If we substitute the value of R_1 from equation 2 (a) in equation 4, we get

$$\sin E^\circ = \frac{\sin B^\circ}{a}\left\{a \cos A_1 - \frac{(r_1 + 1) \sin A_1}{2\,(r_1 - 1}\right\}$$

Now, substituting the value of $\sin A_1$ from equation 1, or 21, we have

$$\sin E^\circ = \frac{\sin B^\circ}{a}\left\{a \cos A_1 = \frac{(r_1 + 1)\,(r_1 - 1)\,d_1}{2\,(r_1 - 1)\,2\,C}\right\}; \text{ or}$$

$\sin E^\circ = \sin B^\circ \left(\cos A_1 - \frac{(r_1 + 1)\,d_1}{4\,a\,C}\right)$; or, since $(r_1 + 1)\,d_1 = D_1 + d_1$.

35. $\sin E^\circ = \sin B^\circ \left(\cos A_1 - \frac{D_1 + d_1}{4\,a\,C}\right)$

By the use of this equation we can dispense with equations 2 (a, b, c, and d). Reproducing, then, the equations necessary to solve any problem of open belt cone pulleys, we shall have the following

FORMULÆ FOR CONE PULLEYS WITH OPEN BELT.

36. $\sin A_1 = \frac{D_1 - d_1}{2\,C}$.

37. $\tan B^\circ = \frac{2a\,(r - 1)}{r + 1}$.

38. $\sin E^\circ = \sin B^\circ \left(\cos A_1 - \frac{D_1 + d_1}{4\,a\,C}\right)$.

$$39. \quad \begin{cases} (a) \quad . \quad . \quad . \quad A = B^\circ - E^\circ \text{ when } \sin E^\circ \text{ is positive.} \\ (b) \quad . \quad . \quad . \quad A = B^\circ + E^\circ \text{ when } \sin E^\circ \text{ is negative.} \end{cases}$$

$$40. \quad \begin{cases} (a) \quad . \quad . \quad . \quad . \quad . \quad . \quad . \quad d = \dfrac{2\,C \sin A}{r-1}. \\ (b) \quad . \quad d = 0.3183\,(L - 2\,C) \text{ when } A = 0 \text{ and } r = 1. \end{cases}$$

$$41. \quad D = rd.$$

$$42. \quad L = 2\,C \cos A + .01745\,d \left\{ 180 + (r-1)\,(90 + A) \right\}$$

Now all that we need to bear in mind, in the use of these formulæ, is to give to a, in equations 37 and 38, the value .314 as long as the belt angle, A, is less than 18°, and the value .298 when A lies between 18° and 30°. Equation 36 is used only once for any pair of cones, to obtain the constant $\cos A_1$ (by the aid of tables of sines and cosines) for use in equation 38.

DISCUSSION.

Prof. J. E. Sweet.—As my name has been used in the paper now before us for discussion, I feel justified in stating as a matter of history, that the method illustrated on page 13 of Mr. Smith's paper was, so far as I know, first used by myself in repairing a foot-lathe for Prof. Wing in 1873 or 1874, and published with illustration in the *American Artisan* of the same year. I would also like to state as a matter of fact that in that lathe, which was of the ordinary sort, the actual variation in the length of belt, when the size of pulleys was determined by my method, was only $\frac{2}{10}$ of an inch from the length when determined mathematically. This variation of $\frac{2}{10}$ of an inch in a belt of some 9 feet in length is entirely within practical limits, and, as a foot-lathe is almost as extreme a case of great variation in sizes and angles as is usually met with in practice, I believe the method to be a practical one.

While it is true that the method does not hold good in an imaginary extreme case, if no one wants to use the extreme case, or so seldom as to be the exception, is it worth while lumbering up our minds with so much to get the two or three fractions of an inch, when the workman will cut two or three inches off the belt if he discovers it a little loose?

The case appears to me to be similar to the Watts parallel motion. It is true that motion is not absolutely correct, but, in the case where it is used in the Richards indicator, it is so nearly correct, that any possible error arising from its imperfection is infinitely less than dozens of other errors occurring in the use of the instrument.

The peculiarity of the parallel motion is that it is very nearly

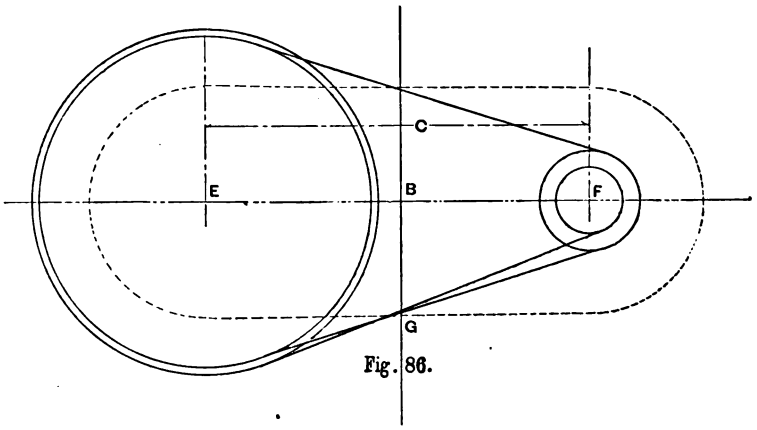

Fig. 86.

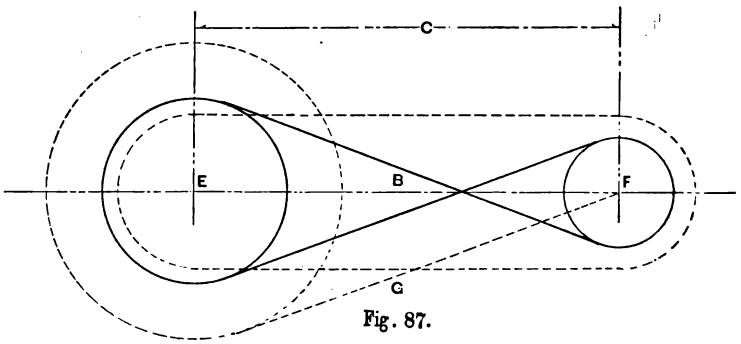

Fig. 87.

correct for quite a distance and then diverges very abruptly, and it appears to be so with this system of determining the size of pulleys; it is practically correct within quite the ordinary limits, and only runs astray where one has very little use for it.

This simple diagram, Figs. 86 and 87, or that of Fig. 48 of Mr. Smith's paper, is, for one who has his drawing tools at hand, one of the most ready ways to determine the length of a belt. The length of the belt in the case shown, and necessarily for any pair of pulleys,

is simply twice the distance $E F$, and the circumference of a circle of which $B G$ is the radius.

I wish to add in conclusion this question: If this simple method is sufficiently accurate for all practical purposes, is it best to hamper it with additional refinements, when the result of these additions is sure to cause those who might profit by it to throw it aside altogether?

Prof. J. E. Denton.—Passing over the point which the professor raises, which unquestionably stands by itself, that when we know the error of any method to be less than a variation that is of any consequence in practice, practice does not ask anybody to go any farther, there is a certain credit to be given to any one who desires to improve it, and who, speaking from the ranks of practice, as Mr. Smith does, thinks that he finds a return for his labor in giving us the refinement. Now, assuming therefore that he desires to add a refinement, I wish to put this remark in the discussion to do simple justice to those who before him have also sought to give us the last refinement, and having that thought in mind I criticise the paper for not mentioning what has gone before with regard to exact solutions of this problem. I would mention that two cases come to mind which, it seems to me, ought to have been quoted. One was Prof. Klein's effort, made some years ago, in which he published a table and a graphical method, which were very simple to use and absolutely exact; also, an approximation by Prof. Sponkler, which was exceedingly simple. I make this remark so that Mr. Smith may reply, as undoubtedly he will, in an able manner, showing what, if anything, is the objection to those as exact solutions, and why, therefore, he offers something which is beyond all that practice wants, as Prof. Sweet has explained.

*Mr. Henry Leon Binsse.**—I wish to present a note by Mr. A. J. Frith, C. E., on Rankine's formula and its use, and I have found that for ordinary practice it is quicker than any graphical method, while it is easier to remember. It is also accurate enough.

Without reflecting on the beauty of the method presented to us, we are inclined to think that a perusal of Mr. Smith's paper is apt to give an erroneous impression of the value of Rankine's formula. In our experience we have not found that a slight variation from desired ratios was of any practical moment, and with this allowance Rankine's formula has been not only perfectly applicable, but very

* Added after adjournment, under the rules.

simple, rapid, and accurate, in the examples that have come beneath our notice. The form in which we have used the formula is as follows:

$$D_0 = \frac{D_1 + D_2}{2} + \frac{(D_1 - D_2)^2}{12.56\ C}, \text{ in which}$$

D_0 = the diameter of equal steps, and C = distance between centers in inches; $D_1 + D_2$, the diameter of unequal steps. It is noticed that the last expression $\left(\frac{(D_1 - D_2)^2}{12.56\ C}\right)$ represents one-half the difference between the sums of the diameters of the equal and unequal steps.

If, then, we had a set of cones to design, the extreme diameter of which—including thickness of belts—were 40″ and 10″, and the ratio desired 4, 3, 2 and 1, we would make a table as follows, C being equal to 100″:

Trial Sum of D.	Ratio.	Trial Diameters.		Values of $\frac{(D_1 - D_2)^2}{12.56\ C}$	Amount to be Added.	Corrected Values.	
		D_1	D_2			D_1	D_2
50	4	40	10	.7165	.0000	40	10
50	3	37.5	12.5	.4975	.2189	37.7189	12.7189
50	2	33.333	16.666	.2212	.4953	33.8286	17.1619
50	1	25	25	.0000	.7165	25.7165	25.7165

The trial diameters being chosen to give the sum of 50″ and the desired ratio, from the differences of these trial diameters, obtain the value of $\left(\frac{(D_1 - D_2)^2}{12.56\ C}\right)$. The difference between each of these and the largest add to each diameter, thus leaving the difference unchanged, and we very rapidly obtain values which approximate closely to the ratio chosen, and which give equal belt tensions.

The example given in the paper of 37″ cones, 30″ apart, ratio 1 to 7, is such an extreme one, that it gives an exaggerated impression of the differences of different methods. We tried Rankine on this example, but had to use the result of our calculations to obtain new differences; not because the results were incorrect, but because they varied somewhat from the ratios determined. The sum of the diameters we obtained differed but $\frac{12}{100}$ of an inch in the most extreme case from the result of Mr. Smith, and gener-

erally but a few hundredths, and were very much closer than either of the other methods. Does this look as if the formula was very inaccurate?

We have tried Unwin's method and found it very tedious, but Rankine's is so rapid that, when the inconvenience of laying out full-size cones, perhaps 8 or 10 feet apart, is taken into consideration, we believe that there is still a place for this formula. We designed by this method a set of cones with extreme diameters of 38″ and 11″, and about 12 feet apart. Afterwards, measuring with a tape-line, we found no practical difference in length of belt between extreme steps.

*Mr. C. A. Smith.**—I am sorry if I have given credit to the wrong man for having first used the method illustrated in Fig. 48. In looking up the data on this point, I followed the reference given by Prof. Sweet in the *American Machinist*, Sept. 17, 1881, viz.: "This method was illustrated some months ago in the *American Machinist*, and in the *American Artisan* for February, 1874." After spending a great deal of time in searching through the back numbers of the *American Machinist*, I finally found the article, by Mr. Fuchs, to which reference has been made, and as it was given as original, and as I did not have access to the *American Artisan* for reference, I concluded that possibly the latter publication was by the same author. This illustrates the importance of giving references in full and complete when given at all, giving name of author and date of publication as well as the other important information. As Prof. Sweet has now explained that he is the one who first used the method, Fig. 48, I hope it sets the matter all right on this point.

In regard "to lumbering up our minds with so much," I will simply say this: If Prof. Sweet will examine impartially the method described in this paper, he will find that all that has been added to his own method to make the new one is an arc of a circle, Fig. 36, struck from the center, G, and touching the belt line. In some exceptionally few cases it may require two such arcs as shown in Fig. 41, when the extreme belt angles are greater and less than 18°. The extra work required is to multiply the center distance by a constant, then lay off the point G and describe the circle. The extra time required to do this will not exceed five minutes.

As I have already stated in the paper, it always takes more time to describe any method fully, and seems more complicated than it

* Author's closure, under the rules.

really is in practice. The present paper may seem all the more so to a superficial observer, from the fact that it is so profusely illustrated and described in detail for the purpose of making every step perfectly clear.

The next point raised by Prof. Sweet is that his method "is sufficiently accurate for all practical purposes." Is it? When the practical man makes use of any formula, rule or method of practice, and it fails to give him the desired result in a single instance, his confidence in it will be gone forever afterwards, because he never knows when and to what extent he can depend upon it. I admit that Prof. Sweet's method is practically as good as the new one in certain cases, and for certain proportions of pulleys and line of centers the two methods are identically the same.

Taking Example 1, represented by Fig. 53, and designing the pulleys by Prof. Sweet's method, the belt, when cut so that it will be just the right length for the first step, will be *over nineteen inches too long* for the eleventh step. Granting that this may be called an imaginary case, yet we can feel confident that the method which will hold good in this case will not fail in any other case.

When the diameters of the first pair of pulleys, D_1, d_1, Fig. 36, and the line of centers are such that the belt line, HI, will pass through the point G, then the two methods will become one and the same, because the radius, R, of the directing circle will then reduce to zero, the circle becoming a point. This condition of things is approximated to in Example 4, in which we would expect practically no difference in the two methods.

Example 3, as calculated by Prof. Sweet's method, gives a difference in the length of belt of nearly one-quarter of an inch against .007″ by the new method. Perhaps, however, Prof. Sweet considers this "within practical limits."

Example 2 gives a difference in the length of belt of nearly three-quarters of an inch by Prof. Sweet's method. This example comes so far within practical dimensions that it can not be called an "imaginary case," but, perhaps, the $\frac{3}{4}''$ variation in the length of the belt would be considered within practical limits if the workman can cut "two or three inches off the belt" to take up the slack caused by changing it from one step on to another. But this latter expression was evidently meant as a figure of speech. Certainly no good practice would admit a variation of $\frac{3}{4}''$ on a lathe where the belt is in a vertical position.

In regard to Prof. Denton's criticism, I would simply say that

the tables to which he refers are not practical, for the reason, already mentioned in my paper, that the *ratio* of the pulleys is a datum usually used, and not the difference of their diameters, nor the height of the steps, nor the ratio of a pulley to the line of centers. Neither of these data would be of any value in the solution of any of the examples given in the paper. If graphical methods have been published which are "absolutely exact," and an approximation which is "exceedingly simple" and comes within the requirements of good practice, Prof. Denton should have done their authors the justice of giving us references to their publications.

CCCXXI.

AN ACCOUNT OF CERTAIN EXPERIMENTS UPON SEVERAL METHODS OF COUNTERBALANCING THE ACTION OF THE RECIPROCATING PARTS OF A LOCOMOTIVE.

BY GAETANO LANZA, BOSTON, MASS.

(Member of the Society.)

WITH EDWARD H. DEWSON, GEORGE F. REYNOLDS, AND EDWARD M. SMITH.

THE object of this paper is to give an account of the experimental work that has been done in the Laboratory of Mechanical Engineering of the Massachusetts Institute of Technology in regard to the effect of different methods in use for counterbalancing the throw of the reciprocating parts of a locomotive; and also as to how to counterbalance the horizontal throw and prevent nosing.

These experiments have formed the subject of the graduating theses of the following three students, viz.: Edward H. Dewson, '85; George F. Reynolds, '86; and Edward M. Smith, '88. They made use of a model of an eight-wheel Hinkley Passenger Locomotive, one-eighth scale, which was suspended by four wires, one at each corner, and set in motion by steam. The following are some of the dimensions of the locomotive:

Total wheel base	22′ 5¼″
Rigid wheel base	8′ 6′
Length of stroke	24″
Diameter of cylinder	17″
Diameter of boiler	52¼″
Length of tubes	11′ 0″
Diameter of drivers	5′ 3″
Diameter of truck wheels	30″
Distance of middle of cylinder from main drivers	11′ 1½″
Weight on drivers	50,000 lbs.
Weight on truck	30,000 "
Total weight	80,000 "
Piston, complete with rod	285 "
Cross-head with key	134 "
Main rod (entire)	305 "
Main rod, back end	196 "
Parallel rod	297 "

Main pin (before pressing in wheel)	68 lbs.
Back pin (" " " ")	86 "
Crank pin boss (estimated)	71 "
Driving wheel (rough)	1,905 "
Tire	1,330 "
Boxes	227 "

The latter includes box, sponge box, saddle and brass. Ten per cent. of the last three weights should be deducted for finish, which will give

Weight of finished wheel	2,895 lbs.

From the weights of the locomotive on the drivers and truck, the center of gravity of the entire machine is found to lie 9′ 7¼″ back of the center of the truck, and 1′ 6¼″ forward of the center of the main driving axle.

From these and other data an eighth scale model shown in the cut (Fig. 55) was constructed by Mr. Dewson and afterwards slightly modified in some particulars by the other two.

Particular attention was paid to making all the parts, which affect in any way the disturbances of the reciprocating parts, exactly one-eighth scale. The following changes were made for convenience in construction, and it will be seen that they can have no effect on the subject under discussion. The frame is made of a single piece of cast iron, to which the driving axle boxes are rigidly attached.

The wheels are also made of one casting, and without spokes, with two circular slots, diametrically opposite each other, one to admit the fastening on of the counterweights, and the other to compensate for the loss of metal in cutting the first. Instead of placing the steam chests on top of the cylinders they were placed on the inside, the valve moving in a vertical instead of a horizontal plane. Also certain changes were made in the main rod and the parallel rod for the sake of convenience of construction, as follows: The main rod was split, and the cross-head placed between the two parts, and the piston rod projects through the cross-head, and runs in a fixed bearing, fastened to the frame. The model, as thus far described, weighs seventy-four pounds, whereas, in order to correspond to the weight of the locomotive, it should weigh 156 pounds. Hence a bar of iron of eighty-two pounds was fastened to it in such a position that the forward end when supported at the center of the truck should weigh 58.6 lbs., thus bringing the center of gravity

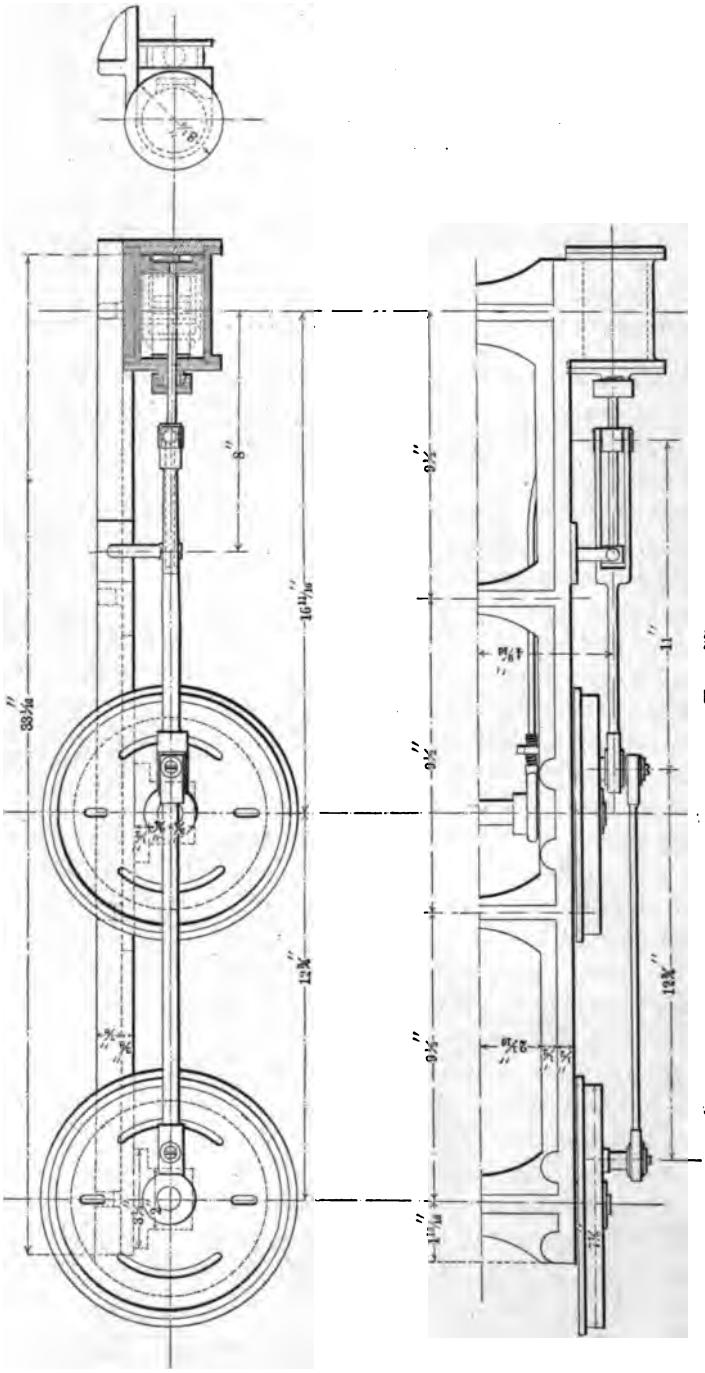

FIG. 55.

14".41 from the center of the truck and in the same relative position as in the full sized machine.

The following are the various weights and dimensions of the model, used in calculating the counterweights:

Weight of crank pin	0.277 lbs.
" " connecting rod	0.598 "
" " piston, piston rod, etc	0.832 "
" " total driving masses	1.707 "
" " coupling masses	0.598 "
Length of connecting rod	10".953
Distance of center of gravity from forward end	7".07
Distance apart of cylinder axes	9".125
Distance apart of center lines of parallel rods	10".25

There are five different motions which the locomotive would receive through the action of the reciprocating parts if free to obey them; they are as follows:

1° Jerking, a forward and backward motion.

2° Nosing, an oscillation about a vertical axis through the center of gravity.

3° Galloping, an oscillation about a horizontal axis at right angles to the track.

4° Pounding, a vertical up and down motion.

5° Rolling, an oscillation about a longitudinal axis.

Since the nosing and rolling are dependent upon the leverage of the acting forces, they are evidently greater for outer than for inner cylinder machines.

In practice it is customary to put the counterweight with its center of gravity directly opposite the crank pin, and in the wheel, so that the center of gravity of the reciprocating parts is not directly opposite the center of gravity of the counterweights, but to one side. This evidently forms a set of equal and opposite parallel forces, or, in other words, a statical couple, which tends to increase the nosing. We can balance the mean throw of the reciprocating parts at the dead points on one side of the locomotive by the use of two counterweights, a large one placed in the wheel on the same side of the locomotive, and opposite the crank pin, and a small one in the wheel on the opposite side of the locomotive which shall throw in the same direction as the reciprocating parts, and we thus obtain a system of three parallel forces, and, by proportioning them so that they shall balance each other, we shall obtain the correct balance for the horizontal throw. Whether this is the best method to follow or not, will be discussed later; we

will merely note here that since we are using larger counterweights than the other method would require, it would naturally be expected that the pounding and rolling would be somewhat increased; as to how far this is an evil will be discussed later. Since the cranks on opposite sides of a locomotive are at right angles to each

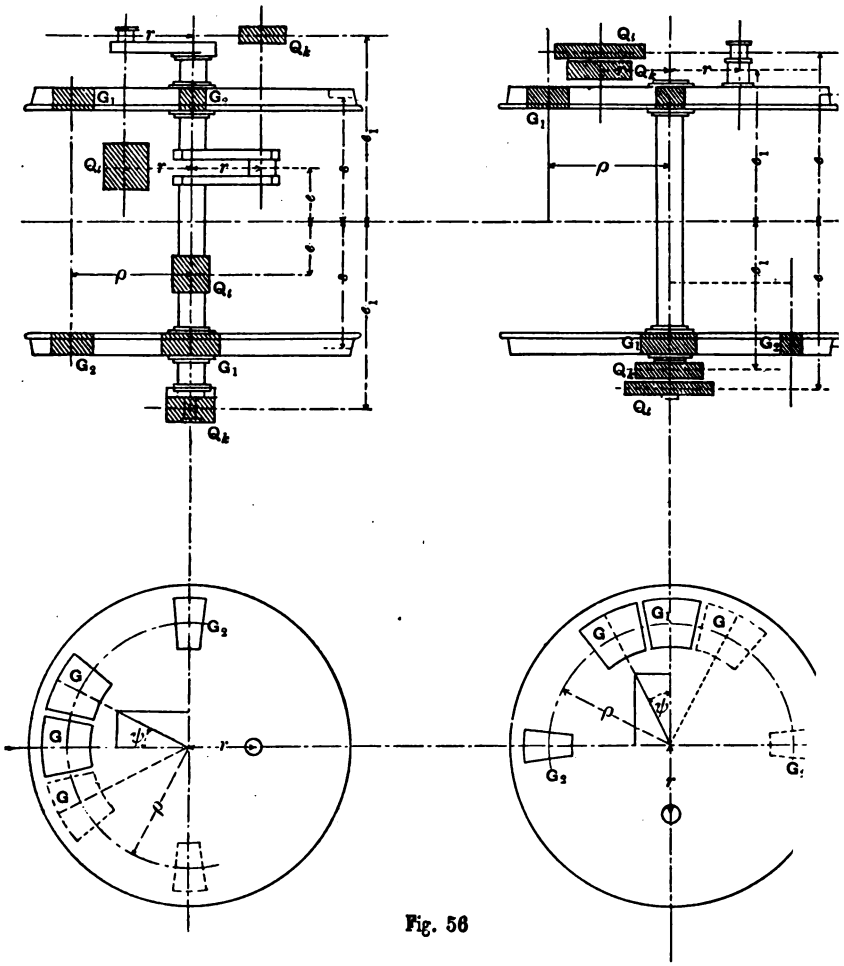

Fig. 56

other, we have, in each driver, one large, and one small co weight, which can be combined in a single resultant counter the radius of whose center of gravity makes a determined with the prolongation of the crank radius.

In order to balance the jerking and nosing at the same ti can imagine exactly opposite the driving and coupling m

and Q_k, counterweights O_t and O_k of equal magnitudes, and at the same distance r from the axis (Fig. 56). The operation of these masses and counterweights balance each other entirely. We can divide these counterweights into two parts, which come in the driving wheels according to their leverages, and which, together, are equal to the counterweight referred to (one of them is, however, positive, and the other negative), and which exert the same turning moment about the axis. Change these weights so that they may have the same moment, and be at the required distance ρ from the axis, and we have thus obtained the proper counterweights.

Let $2e$ = distance apart of the cylinder axes, and of the imaginary counterweights.

$2e_1$ = distance apart of the center of gravity of the corresponding coupling masses.

$2s$ = distance apart of the tracks, or middle of the wheels.

G_1 = the counterweight which should come opposite the crank pin, and on the same side as the parts to be balanced, and G_2 = the weight which should come in the other wheel. ρ is the proper distance of the center of gravity of the weights G_1 and G_2 from the axis, and r = the length of the crank. It is obvious that we cannot put these imaginary counterweights in the positions referred to above, but must place them so that their centers of gravity shall lie in the plane of the middle of the wheel. This we can do by applying the principle of leverages, and we have the correct counterweights expressed by the following equations:

$$G_1 = \frac{r}{\rho}\left[O_t \frac{s+e}{2s} \pm O_k \frac{s+e_1}{2s}\right] \quad . \quad . \quad . \quad . \quad (1)$$

$$G_2 = \frac{r}{\rho}\left[O_t \frac{s-e}{2s} \mp O_k \frac{e_1-s}{2s}\right] \quad . \quad . \quad . \quad . \quad . \quad (2)$$

the upper signs referring to the case when the connecting rod and the parallel rod are attached to the same crank pin, and the lower when their crank pins are 180° apart. The left hand figure shows the case of inner cylinder, and the right hand that of outer.

These equations give the total counterweights to be used, and these are to be divided between the driving and the coupled wheels.

Let G'_1 and G'_2 be the weights to be put in the driving wheel, and G_1'' and G_2'' those to be put in the coupled wheel.

$$\therefore G_1 = G_1' + G_1''$$

$$\text{and } G_2 = G_2' + G_2''.$$

Let the coupling masses Q_k be considered as made up of R_k and C_k, the latter being the equivalent weight of the coupling crank concentrated at the crank pin, and the former the weight of the rod. Then the following equations will evidently be true:

$$G_1' = \frac{r}{\rho}\left\{ O_t \frac{s+e}{2s} \pm \tfrac{1}{2} R_k \frac{e_1+s}{2s} \right\}$$

$$G_1'' = \pm \frac{r}{\rho}\left\{ \tfrac{1}{2} R_k + C_k \right\} \frac{e_1+s}{2s}$$

$$G_2' = \frac{r}{\rho}\left\{ O_t \frac{s-e}{2s} \mp \tfrac{1}{2} R_k \frac{e_1 \quad s}{2s} \right\}$$

$$G_2'' = \frac{r}{\rho}\left\{ \tfrac{1}{2} R_k + C_k \right\} \frac{e_1-s}{2s}$$

We may reduce these to a single resultant using the parallelogram of forces, and we thus obtain

$$G' = \sqrt{G_1'^2 + G_2'^2}$$

$$G'' = \sqrt{G_1''^2 + G_2''^2}$$

and if ψ_1 is the angle between the radius of G' and G_1'; and ψ is the angle between G'' and G_1'', we have

$$\tan \psi_1 = \frac{G_2'}{G_1'}$$

$$\tan \psi_2 = \frac{G_2''}{G_1''}$$

While Mr. Dewson made but few experiments, Mr. Reynolds made quite a number, which included those of Mr. Dewson.

The different methods of counterbalancing upon which he experimented will be denoted respectively by *A*, *B*, *C*, *D*, *E*, *F*, *G*, *H*, and they may be described as follows:

A. No counterweights.

B. Method used by one of the locomotive works, which may be described as follows:

"For the main drivers, place opposite the crank pin a weight equal to one-half the weight of the back end of the connecting rod plus one-half the weight of the front end of the connecting rod, piston, piston rod, and cross-head. For balancing the coupled wheels, place a weight opposite the crank pin equal to one-half the parallel rod plus one-half of the weights of the front end of the main rod, piston, piston rod and cross-head. The centers of gravity of the above weights must be at the same distance from the axles as the crank pin."

C. The rule given by D. K. Clark, and followed by another locomotive works, is the following:

"Find the separate revolving weights of crank pin, crank pin boss, coupling rods, and connecting rods for each wheel, also the reciprocating weight of the piston and appendages, and one-half the connecting rod, divide the reciprocating weight equally between each wheel, and add the part so allotted to the revolving weight on each wheel; the sums thus obtained are the weights to be placed opposite the crank pin, and at the same distance from the axis. To find the counterweight to be used when the distance of its center of gravity is known, multiply the above weight by the length of the crank in inches and divide by the given distance."

This rule differs from the preceding in that the same weight is placed in each wheel.

D. Method of counterbalancing already explained in this paper.

E. Method used by another locomotive works which may be described as follows:

"S = one-half the stroke.

G = distance from center of wheel to center of gravity in counterbalance.

w = weight at crank pin to be balanced.

W = weight in counterbalance.

f = coefficient of friction so called.

$$W = \frac{S \times \left(w - \frac{w}{f}\right)}{G}$$

$f = 5$ in ordinary practice.

The reciprocating weight is found by adding together the weights of the piston, piston rod, cross-head, and one-half of the main rod. The revolving weight for the main wheel is found by adding together the weights of the crank pin hub, crank pin, one-half of

the main rod, and one-half of each parallel rod connecting to this wheel; to this add the reciprocating weight divided by the number of wheels.

The revolving weight for the remainder of the wheels is found in the same manner as for the main wheel, except one-half of the main rod is not added.

The weight of the crank pin hub and the counterbalance does not include the weight of the spokes, but of the metal inclosing them. This calculation is based for one cylinder and its corresponding wheels."

F. Method pursued by another works, which is as follows: "Ascertain as near as possible the weights of crank pin, additional weight of wheel boss for the same, add side rod, and main connections, piston rod and head, with cross-head on one side: the sum of these multiplied by the distance in inches of the center of the crank pin from the center of the wheel, and divided by the distance from the center of the wheel to the common center of gravity of the counterweights is taken for the total counterweight for that side of the locomotive which is to be divided among the wheels on that side."

G. Method pursued by another locomotive works is as follows: "Balance the wheels of the locomotive with a weight equal to the weights of crank pin, crank pin hub, main and parallel rods, brasses, etc., plus two-thirds ot the weight of the reciprocating parts (cross-head, piston and rod and packing)."

H. Method pursued by another locomotive works: "Balance the weights of the revolving parts which are attached to each wheel with exactness, and divide equally two-thirds of the weight of the reciprocating parts between all the wheels. One-half of the main rod is computed as reciprocating, and the other half as revolving weight."

The method of making the experiments was as follows: To the front end of the model a long rod was attached, and, fastened in the end of this was a needle point, which was caused to trace its motion on a piece of smoked glass, slowly moved parallel to, and at right angles to the longitudinal axis of the machine. A sinuous line was thus obtained which showed the jerking or nosing according to the direction in which the glass was moved. The amount of either was then measured with the aid of a magnifying glass. Knowing the distance of the middle point from the center of gravity of the machine, the angle of nosing was calculated. The results

obtained for the jerking and nosing with the different methods of counterweighting will now be given.

JERKING IN INCHES.

Rev. per Min.	A	B	C	D	E	F	G	H
100	0.06	0.006	0.012	0.012	0.015	0.018	0.015	0.015
150	0.07	0.01	0.012	0.012	0.02	0.017	0.018	0.018
200	0.07	0.012	0.01	0.01	0.02	0.017	0.018	0.018
250	0.08	0.014	0.01	0.01	0.023	0.015	0.02	0.018
300	0.08	0.015	0.01	0.014	0.025	0.015	0.018	0.018

NOSING IN INCHES.

Rev. per Min.	A	B	C	D	E	F		H
100	0.20	0.01	0.01	0	0.04	0.028	0.04	0.038
150	0.18	0.01	0.01	0	0.035	0.030	0.035	0.035
200	0.16	0.015	0.012	0	0.033	0.030	0.032	0.033
250	0.15	0.015	0.015	0	0.03	0.030	0.030	0.030
300	0.12	0.017	0.015	0	0.03	0.032	0.030	0.028

ANGLE OF NOSING IN MINUTES OF ARC.

Rev. per Min.	A	B	C	D	E	F	G	H
100	36.30	1.81	1.81	0	7.24	5.07	7.24	6.88
150	32.67	1.81	1.81	0	6.33	5.43	6.33	6.3
200	29.40	2.71	2.17	0	5.97	5.43	5.99	5.9
250	27.21	2.71	2.71	0	5.43	5.43	5.43	5.43
300	21.78	3.07	2.71	0	5.43	5.99	5.43	5.07

REMARKS ON THE SPECIAL TESTS.

A. The pointer traveled in ellipses whose major axes were at right angles to the longitudinal axis of the machine, and whose minor axes moved from one side of the center line to the other by a small amount. At high speeds there was a marked tendency to roll.

B. After making the experiments, with the results reported in the table, another set was made with a brake applied to the drivers, in order to determine whether the disturbances were affected or

not by the loading or unloading of the drivers. The results, however, were identical with those obtained without the brake.

C. These tests were also repeated with the brake, but the results were identical with those obtained without the brake.

D. The results given in the table were obtained by using the single resultant counterweight calculated as already explained. Afterwards the tests were repeated, using the two separate counterweights, as already described, in each wheel.

It will be evident from a perusal of the results that this method effectually destroys the nosing.

The counterweights, however, are heavier than those used in several of the other systems, and it would seem reasonable to conclude that the pounding would be increased; that it is not increased to an injurious extent will be made evident from some experiments of which an account is given later in this paper.

I understand that a locomotive made at the Canadian Locomotive and Engine Co.'s Locomotive Works of Kingston, Ont., Canada, was counterweighted in this way, and was considered a very smooth running engine.

The method itself is given by Rankine and by Grove, but does not seem to have been tried in locomotive works, with the single exception already mentioned.

E. The counterweights used in this method of balancing are considerably smaller than those used in the preceding methods. Moreover, the increase in the nosing and jerking shows that the counterweights are too light to balance the disturbances successfully. In this case, however, the tendency to roll was considerably less.

POUNDING.

It seemed desirable to investigate these different methods of counterweighting in regard to their effect upon the pounding. Two series of experiments were made for this purpose, one by Mr. Reynolds and the other by Mr. Smith.

The work done by Mr. Reynolds may be described as follows:

The model was placed upon a wooden frame in such a way that the wheels were free to revolve as before, and the whole was placed upon platform scales. The mode of conducting the experiment was as follows: The whole was weighed at rest, and then after it was set in motion the weight was ascertained, which it was necessary to add to keep the scale arm from leaving its seat.

Since the throw is the same upward as downward, this extra weight subtracted from the original weight should give the amount indicated on the scale arm, when the arm just stays against the upper stop. This it did in every case.

These experiments do not, of course, show the actual force of the vertical throw in pounds, but merely give relative results, thus showing which of the methods already detailed is the best in this respect.

The results are given in the following table:

Rev. per min.	*A*	*B*	*C*	*D*	*E*	*F*	*G*	*H*
100		1.5	1.25	1	1	1	1	1.5
150		2.5	2.75	1.75	1.5	2	1.75	2.5
200		4.25	4.25	2.75	2.5	3.75	3.25	3.75
250		6.75	6	4.5	4	4.75	5.50	5.25
300		8	7.5 to 9	6.5 to 7.5	5.75 to 6.5	6 to 7	6 to 7	7 to 8

These results would seem to show that the pounding is not materially greater in *D* than in the other methods in use. Mr. Smith attempted to obtain more nearly absolute values by directly weighing the pound on the driving boxes by means of springs.

The apparatus used is shown in the accompanying cut (Fig. 57). It will be seen that the driving boxes are in two parts. Now, by removing the screws which were intended to fasten the lower to the upper half, we may have the pressure which would otherwise cause a tension in these screws transmitted through the weighing springs placed beneath, and thence to the frame by means of the horizontal piece *A B*, and the bolts *C C'*. The only changes made in the model itself to secure this arrangement were to remove the bolts fastening the two halves of the driving box together, and to replace the bolts which attach the boxes to the frame by the ones *C C'* shown in the drawing, and which perform the double duty of supporting the upper part of the frame and of transmitting to it the weight which may come on the spring.

These weighing springs were graduated to a scale of sixty pounds to the inch. The head of the spring was provided with a nipple, fitting into a corresponding hole in the driving box, and the elongated tail piece passed through the micrometer screw *D*, on which the spring rests, thus making the different parts of the apparatus stable in position. From the spring the pressure was transmitted through the micrometer screw to the horizontal piece *AB*. These

not by the loading or unloading of the drivers. The results, however, were identical with those obtained without the brake.

C. These tests were also repeated with the brake, but the results were identical with those obtained without the brake.

D. The results given in the table were obtained by using the single resultant counterweight calculated as already explained. Afterwards the tests were repeated, using the two separate counterweights, as already described, in each wheel.

It will be evident from a perusal of the results that this method effectually destroys the nosing.

The counterweights, however, are heavier than those used in several of the other systems, and it would seem reasonable to conclude that the pounding would be increased; that it is not increased to an injurious extent will be made evident from some experiments of which an account is given later in this paper.

I understand that a locomotive made at the Canadian Locomotive and Engine Co.'s Locomotive Works of Kingston, Ont., Canada, was counterweighted in this way, and was considered a very smooth running engine.

The method itself is given by Rankine and by Grove, but does not seem to have been tried in locomotive works, with the single exception already mentioned.

E. The counterweights used in this method of balancing are considerably smaller than those used in the preceding methods. Moreover, the increase in the nosing and jerking shows that the counterweights are too light to balance the disturbances successfully. In this case, however, the tendency to roll was considerably less.

POUNDING.

It seemed desirable to investigate these different methods of counterweighting in regard to their effect upon the pounding. Two series of experiments were made for this purpose, one by Mr. Reynolds and the other by Mr. Smith.

The work done by Mr. Reynolds may be described as follows:

The model was placed upon a wooden frame in such a way that the wheels were free to revolve as before, and the whole was placed upon platform scales. The mode of conducting the experiment was as follows: The whole was weighed at rest, and then after it was set in motion the weight was ascertained, which it was necessary to add to keep the scale arm from leaving its seat.

Since the throw is the same upward as downward, this extra weight subtracted from the original weight should give the amount indicated on the scale arm, when the arm just stays against the upper stop. This it did in every case.

These experiments do not, of course, show the actual force of the vertical throw in pounds, but merely give relative results, thus showing which of the methods already detailed is the best in this respect.

The results are given in the following table:

Rev. per min.	*A*	*B*	*C*	*D*	*E*	*F*	*G*	*H*
100		1.5	1.25	1	1	1	1	1.5
150		2.5	2.75	1.75	1.5	2	1.75	2.5
200		4.25	4.25	2.75	2.5	3.75	3.25	3.75
250		6.75	6	4.5	4	4.75	5.50	5.25
300		8	7.5 to 9	6.5 to 7.5	5.75 to 6.5	6 to 7	6 to 7	7 to 8

These results would seem to show that the pounding is not materially greater in *D* than in the other methods in use. Mr. Smith attempted to obtain more nearly absolute values by directly weighing the pound on the driving boxes by means of springs.

The apparatus used is shown in the accompanying cut (Fig. 57). It will be seen that the driving boxes are in two parts. Now, by removing the screws which were intended to fasten the lower to the upper half, we may have the pressure which would otherwise cause a tension in these screws transmitted through the weighing springs placed beneath, and thence to the frame by means of the horizontal piece *A B*, and the bolts *C C'*. The only changes made in the model itself to secure this arrangement were to remove the bolts fastening the two halves of the driving box together, and to replace the bolts which attach the boxes to the frame by the ones *C C'* shown in the drawing, and which perform the double duty of supporting the upper part of the frame and of transmitting to it the weight which may come on the spring.

These weighing springs were graduated to a scale of sixty pounds to the inch. The head of the spring was provided with a nipple, fitting into a corresponding hole in the driving box, and the elongated tail piece passed through the micrometer screw *D*, on which the spring rests, thus making the different parts of the apparatus stable in position. From the spring the pressure was transmitted through the micrometer screw to the horizontal piece *AB*. These

not by the loading or unloading of the drivers. The results, however, were identical with those obtained without the brake.

C. These tests were also repeated with the brake, but the results were identical with those obtained without the brake.

D. The results given in the table were obtained by using the single resultant counterweight calculated as already explained. Afterwards the tests were repeated, using the two separate counterweights, as already described, in each wheel.

It will be evident from a perusal of the results that this method effectually destroys the nosing.

The counterweights, however, are heavier than those used in several of the other systems, and it would seem reasonable to conclude that the pounding would be increased; that it is not increased to an injurious extent will be made evident from some experiments of which an account is given later in this paper.

I understand that a locomotive made at the Canadian Locomotive and Engine Co.'s Locomotive Works of Kingston, Ont., Canada, was counterweighted in this way, and was considered a very smooth running engine.

The method itself is given by Rankine and by Grove, but does not seem to have been tried in locomotive works, with the single exception already mentioned.

E. The counterweights used in this method of balancing are considerably smaller than those used in the preceding methods. Moreover, the increase in the nosing and jerking shows that the counterweights are too light to balance the disturbances successfully. In this case, however, the tendency to roll was considerably less.

POUNDING.

It seemed desirable to investigate these different methods of counterweighting in regard to their effect upon the pounding. Two series of experiments were made for this purpose, one by Mr. Reynolds and the other by Mr. Smith.

The work done by Mr. Reynolds may be described as follows:

The model was placed upon a wooden frame in such a way that the wheels were free to revolve as before, and the whole was placed upon platform scales. The mode of conducting the experiment was as follows: The whole was weighed at rest, and then after it was set in motion the weight was ascertained, which it was necessary to add to keep the scale arm from leaving its seat.

Since the throw is the same upward as downward, this extra weight subtracted from the original weight should give the amount indicated on the scale arm, when the arm just stays against the upper stop. This it did in every case.

These experiments do not, of course, show the actual force of the vertical throw in pounds, but merely give relative results, thus showing which of the methods already detailed is the best in this respect.

The results are given in the following table:

Rev. per min.	*A*	*B*	*C*	*D*	*E*	*F*	*G*	*H*
100		1.5	1.25	1	1	1	1	1.5
150		2.5	2.75	1.75	1.5	2	1.75	2.5
200		4.25	4.25	2.75	2.5	3.75	3.25	3.75
250		6.75	6	4.5	4	4.75	5.50	5.25
300		8	7.5 to 9	6.5 to 7.5	5.75 to 6.5	6 to 7	6 to 7	7 to 8

These results would seem to show that the pounding is not materially greater in *D* than in the other methods in use. Mr. Smith attempted to obtain more nearly absolute values by directly weighing the pound on the driving boxes by means of springs.

The apparatus used is shown in the accompanying cut (Fig. 57). It will be seen that the driving boxes are in two parts. Now, by removing the screws which were intended to fasten the lower to the upper half, we may have the pressure which would otherwise cause a tension in these screws transmitted through the weighing springs placed beneath, and thence to the frame by means of the horizontal piece *A B*, and the bolts *C C'*. The only changes made in the model itself to secure this arrangement were to remove the bolts fastening the two halves of the driving box together, and to replace the bolts which attach the boxes to the frame by the ones *C C'* shown in the drawing, and which perform the double duty of supporting the upper part of the frame and of transmitting to it the weight which may come on the spring.

These weighing springs were graduated to a scale of sixty pounds to the inch. The head of the spring was provided with a nipple, fitting into a corresponding hole in the driving box, and the elongated tail piece passed through the micrometer screw *D*, on which the spring rests, thus making the different parts of the apparatus stable in position. From the spring the pressure was transmitted through the micrometer screw to the horizontal piece *AB*. These

screws were made with a pitch of twenty threads to the inch and accurately fitted to the corresponding tapped holes in the supporting pieces. With the screw is the micrometer device, arranged as follows: To the piece AB is fastened the brass scale E, graduated to twentieths of an inch, corresponding to the pitch of the screw. Next to the milled head of the screw is a brass collar F, divided circumferentially into twenty-five equal parts. Now, since each revolution of the screw causes a vertical movement of $\frac{5}{100}$ of an

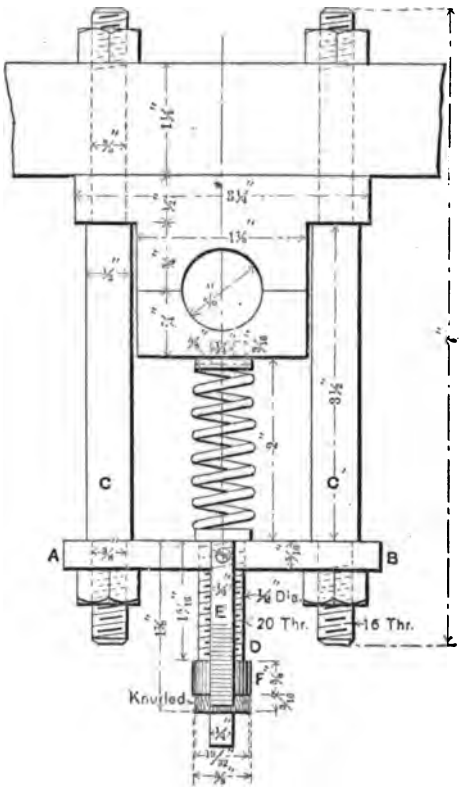

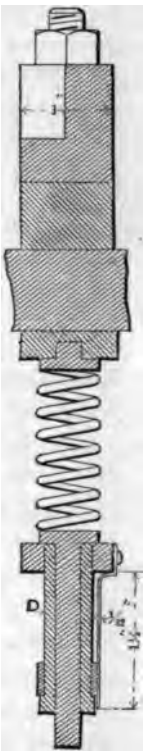

Fig. 57

inch, each of these divisions corresponds to $\frac{2}{1000}$ of an inch. Readings can be taken to $\frac{1}{1000}$ of an inch, and the scale might easily be read to $\frac{1}{5000}$ of an inch, if the other conditions of the experiments should make such precision valuable. A difference of $\frac{1}{1000}$ of an inch in the reading corresponds to a compression of $\frac{6}{100}$ of a pound.

The method of conducting the experiments was as follows: The counterweights which it was desired to investigate were first placed in the wheels. Then a micrometer reading was taken under each wheel while the machine was at rest, these readings being used as

datum readings for the succeeding ones, whose excess over these gave the pressure due to the centrifugal action of the reciprocating parts and counterweights combined.

The experiments of Mr. Smith were not, however, carried to a sufficient degree of completeness to render them suitable for publication until some further work is done upon them.

In conclusion it may be said that while method *D* effectually destroys the nosing, and is undoubtedly the best for balancing the horizontal throw, it seems desirable to make more experiments upon the vertical throw, before very decided conclusions can be drawn in this regard.

DISCUSSION.

The Chairman.—This paper refers to a subject which was treated very fully in a practical way at the Altoona meeting where Mr. Vogt gave some results of the rules as to counterbalancing locomotives which were deduced from the practice of the Pennsylvania Railroad Company. I hope that some of the other persons who have expressed a desire to discuss this paper, will avail themselves of the opportunity.

Mr. Chas. E. Emery.—It seems to me that this subject of counterbalancing locomotives ought not to pass without remark. Any one can easily count the revolutions of the drivers of a locomotive when running rapidly even at the distance of a mile or more by the periodical changes in the sound at every revolution. This seems to be entirely due to the counterbalances in the wheels which change the pressure on the rails at different portions of the revolution at high speeds and must make very considerable variations in the adhesion. This branch of the subject ought to be fully discussed. Capt. John Ericsson has pointed out the only way in which the reciprocating parts can be completely balanced, which is by putting in a counterbalance weight on the opposite end of a vertical beam connected to the piston, so that vibratory action on the main frame of the engine due to starting and stopping the mass of metal contained in the piston and its connections will be counterbalanced by the force necessary to move the counterbalance in the opposite direction. The plan involves additional parts, but it seems to be the only way in which a locomotive can be balanced so as to be laterally steady on the track and at the same time not have the very decided varying pressure on the rails and difference of adhesion due to the centrifugal action of the weights.

CCCXXII.

FLOW OF STEAM IN A TUBE.

BY C. H. PEABODY, BOSTON, MASS.

FOUR years ago, in preparing for tests on injectors, it appeared desirable to measure the quantity of steam supplied to the injector by a method similar to gauging water by allowing it to flow through an orifice under a known head. It was proposed by the author that the steam be allowed to flow through an orifice from one chamber into another under a small difference of pressure, and that the flow under such conditions be determined by direct experiment.

The apparatus devised for this was not used for gauging steam, as was proposed, but it was seen that it could be used for determining the applicability of the ordinary equations for the flow of steam through an orifice or in a tube, to the conditions of the apparatus. With the advice of the author, the apparatus in its original form, with only a few minor changes suggested by his experience, has been used in three successive years, by candidates for a degree in preparing their graduation theses.

In 1886 the apparatus was used to investigate the flow of steam through an orifice, and in 1887 to investigate the flow of steam in a tube, but the results, though of interest, were marred by some minor defects. In the present year, work was done on the flow of steam in a tube, under the author's personal supervision, which is thought worthy of presentation to this Society.

The equation for the flow of steam from a straight uniform tube of large diameter into a straight uniform tube of small diameter is:

$$A\left(\frac{w_b}{2g} - \frac{w_a}{2g}\right) = Q + x_a r_a - x_b r_b + q_a - q_b + A\sigma(p_a - p_b) \qquad (1.)$$

in which A is the reciprocal of the mechanical equivalent of heat, and g is the acceleration due to gravity; Q is the heat given to the steam at the orifice where the small tube joins the large one; w_a is the velocity in the large tube at a distance from the orifice, and w_b the velocity in the small tube also at a distance from the

orifice; p_a and p_b are the pressures in the tubes A and B, p_a being the larger, and r_a and r_b are the latent heats of vaporization, and q_a and q_b the heats of the liquid corresponding; x_a is the part of one unit of weight of the fluid in the tube A which is dry steam, and $1 - x_a$ is the part which is water mingled with the steam; x_b is the corresponding quantity for the tube B; finally, σ is the volume of one unit of weight of water.

It is assumed that neither tube gives heat to the steam or receives heat from it, and that the friction of the fluid on the sides of the wall can be neglected. The heat Q is supposed to be given at the orifice, it is commonly assumed to be zero, in which case the flow is said to be adiabatic.

At and near the orifice eddies and irregular currents are likely to be of sufficient importance to prevent us from knowing the condition of the steam; consequently the properties p_a and p_b and x_a x_b must pertain to the steam only at such a distance from the orifice that the flow is steady.

In these experiments the velocity w_a was so small that it could be neglected. At the same time we may assume the flow to be adiabatic, and thus reduce equation (1) to

$$A\frac{w_b}{2g} = x_a r_a - x_b r_b + q_a - q_b + A\sigma(p_a - p_b) \quad . \quad (2.)$$

The value of x_a must be determined by experiment. x_b can then be determined by the equation:

$$\frac{x_a r_a}{T_a} + \int_{t_0}^{t_a} \frac{c\,dt}{T} = \frac{x_b r_b}{T_b} + \int_{t_0}^{t_b} \frac{c\,dt}{T}, \quad . \quad . \quad . \quad . \quad (3.)$$

which applies to any adiabatic change of a mixture of a liquid with its vapor. In this last equation T_a is the absolute temperature of the steam in the tube A, and T_b that of the steam in the tube B. c is the specific heat of water, and $\int \frac{c\,dt}{T}$ is the entropy of the liquid above that at freezing point.

If the area of the cross-section of the tube be N, then the volume per second is

$$V = Nw_b,$$

and the weight per second G is obtained by dividing by the specific volume

$$v_b = x_b u_b + \sigma,$$

in which u_b is the increase in volume of one unit of weight of water when it is entirely vaporized. Therefore

$$G = \frac{N w_b}{x_b u_b + \sigma} \quad . \quad . \quad . \quad . \quad . \quad . \quad . \quad . \quad (4.)$$

The tube used in these experiments was of brass 0.275 of an inch internal diameter and eight inches long. At the entrance end a plate, 1½ inches in diameter, was driven on flush with the end of the tube, and the orifice was well rounded to avoid contraction. This tube was the tube *B*, and led from an iron pipe six inches in diameter and two feet long which corresponded to the tube *A*. The brass tube discharged into another iron pipe six inches in diameter and two feet long, which formed a chamber in which the steam came to rest, and from which it was led to a surface condenser.

The two pieces of six-inch pipe were capped on the outer ends, and had flanges on the inner ends, between which was a plate holding the experimental tube. The whole apparatus was lagged on the outside, and the plate holding the brass tube was covered on both sides with about four inches of asbestos to prevent the flow of heat from one part of the apparatus to the other.

Steam was led to the apparatus by a lagged pipe one inch in diameter, and away from it to the condenser by a pipe of the same size. Each of these pipes had a valve near the apparatus. The valve in the supply pipe was used merely to shut off the steam when the apparatus was not in use, and during an experiment it was wide open, so that the pressure in the tube *A* was full boiler pressure or nearly so. The valve in the exhaust pipe was manipulated to maintain the desired difference of pressure between the two parts of the apparatus. Each chamber of the apparatus was supplied with a good steam gauge, and with a thermometer in a long brass cup filled with oil. The gauges were compared with a mercury column in the laboratory, and the thermometers were calibrated, and their freezing and boiling points were determined. The exhaust steam was condensed in a small surface condenser and weighed in a tank.

The experiments were begun after the apparatus had been running steadily for some time and lasted about half an hour.

Steam for the experiments was drawn from the main steam pipe, and as the supply pipe had a drip near the apparatus which remained open during an experiment, it was assumed that the

quality of the steam was the same as that in the main pipe. A large number of experiments with different types of calorimeters gave 1½ to two per cent. of moisture in the steam. Later experiments with a new type of calorimeter, described in a paper presented to this meeting, gave under normal conditions 1 to 1.5 per cent. of moisture. With a large difference of pressure the steam, after coming to rest in the chamber beyond the tube, was superheated, and by the method employed with the new calorimeter, the amount of moisture could be calculated, giving the same result.

The data and the calculated results of the experiments quoted here are taken from the graduation thesis of Mr. B. G. Buttolph, of the class of 1888, who deserves much credit for the careful and thorough manner in which he did his work.

As the more recent data were not available till the work was nearly complete, the moisture was assumed to be two per cent. in all the calculations. The error from this source is inconsiderable.

The data and results of the experiments are given in the following table, and are plotted in the accompanying diagram (Fig. 10). The abscissæ are differences of pressures, and the ordinates the ratio of the actual flow to the calculated flow. The curve on the diagram is intended merely to show the degree of regularity of the experiments more readily.

	Pressure of steam in front of tube.	Pressure of steam beyond tube.	Difference of pressures.	Flow of steam per hour by tank in pounds. G_t	Flow of steam per hour, calculated in pounds. G_c	$\frac{G_t}{G_c}$
1	69.1	4.4	64.7	229.0	182.3	1.260
2	69.6	9.7	59.9	230.4	211.2	1.091
3	71.3	14.8	56.6	242.0	233.4	1.037
4	69.1	19.4	49.7	232	242.2	0.958
5	70.0	24.5	46.5	234.5	256.6	0.914
6	70.3	29.1	41.2	229 0	261.5	0.876
7	72.00	34.2	37.8	232.0	268.9	0.860
8	72.00	39.5	32.5	221.4	266.9	0.830
9	71.6	44.2	27.4	216.5	260.1	0.833

The table will be readily understood from the headings. It should, however, be noted that the calculated flow per hour is 3,600 times that given by equation (4).

The ratio of the actual quantity to the calculated quantity, if the theory were entirely applicable to this case, should resemble the coefficient of flow for water through a short pipe, and should not

be greater than unity. The marked, though regular increase of this ratio with the increase of the difference of pressure, and the fact that, for the larger differences, this ratio is larger than one, shows conclusively that some of the assumptions are inadmissible.

It is not improbable that heat is given by the steam to the tube at the admission end, and regained by the steam towards the exit end. Such an interchange must influence both the condition of the steam at the orifice and the rate of flow. The well-known phenomena of cylinder condensation and reëvaporation in steam engines show that such an action may be energetic. It is also possible that the length of the tube is not sufficient to ensure a steady flow.

It is noticeable that the weight of steam discharged by the tube has a maximum, which is for a difference of pressure of about thirty-five pounds by the equation, and for a difference of pressure of about fifty-five pounds by experiment.

Some earlier experiments of this year are not recorded on

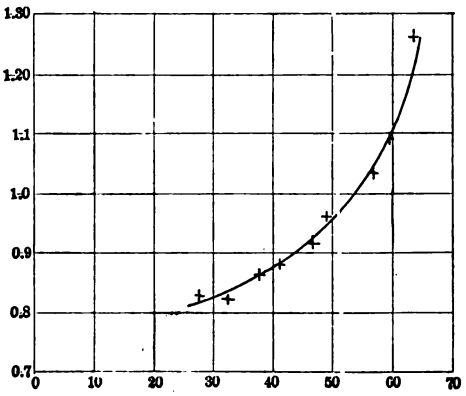

FIG. 10.

account of discrepancies due to the imperfection of the methods, and for the same reason experiments of two preceding years are excluded.

In such a series of experiments the superior pressure should be the same for all of the experiments. Some of the irregularity of the results may be chargeable to the fact that the boiler pressure was not the same on different days.

DISCUSSION.

Prof. Jas. E. Denton.—I have only just noticed that there is quite a discrepancy between these experiments regarding the flow of steam and those which I have examined, and if they are exact they upset the theory regarding the flow of steam. We have believed that there is a maximum flow of steam from a boiler at a given pressure into another space at another pressure, and if you have a boiler at 100 pounds of steam absolute and let it flow into a space in which the pressure is lower, when the lower pressure is over 60 pounds while the flow takes place, yet when the lower pressure is below 60 pounds, it does not make any difference whether it is 60 pounds or 30 pounds, or a vacuum. It will flow from 100 pounds pressure into anything below 60 pounds with uniform velocity. That was the result shown in 1867, I think, by the experiments of Napier, and they excited a good deal of controversy at that time. People lost their tempers about it. I remember a number of papers in the *Engineer*, in which it was stated that it could not be true that such was the case, but it proved to be the case. Upon Professor Rankine investigating it, he proposed a reason for it. He showed why the theoretical computation proves that the greatest amount of steam flows against a lower pressure, which is about three-fifths of the upper pressure. When a committee of Scotch shipbuilders a number of years ago took up the subject of safety-valves, they verified the fact very deliberately, and in D. K. Clark's manual you will find that total given, and the three-fifths point was very accurately verified by those experiments. I have never gone over this exact ground. It is common to make the experiment to show the paradox, but I never have run over these particular pressures, so that, if that maximum is correct as given here, it certainly is new to the literature of the subject as I have read it for a number of years.

There was a point here that I should like to have a little explanation about, and that is why it is that the coefficients of discharge are greater than computed. Why should the coefficient of discharge be greater actually than is computed by the theory? That was one of the most important suggestions ever made on the subject, and it leads into what Professor Peabody says he is going to do, namely, to investigate the flow of steam through an orifice which is not a straight tube. The explanation of this con-

stancy of flow suggested by Rankine is this: as the jet leaves the straight tube and flares out, its section is constantly greater. The calculation made by theory assumes that the less pressure you are flowing into is that of the orifice of the tube. Therefore, you use the section of the orifice, and the fact is, probably, that this is not the place where the lower pressure exists. The lower pressure belongs to some section a little below the tube, just as has been found with nozzles through which water flows. The true section to take is some section yet unlocated beyond the orifice, having a cross-section greater than the orifice of the tube, and what we want is, to make such tubes as that and take the pressure along the jet; make a tube that does not confine the jet, and determine the pressure along that jet. Find where the lower pressure used in the formula is situated, and use that cross-section. Now, Rankine's suggestion at once explains why the coefficient of flow varies—why the coefficient of flow must vary according to the density of the atmosphere it flows into. I should like to see Professor Peabody add to this paper a column showing velocities and flow, because I find a great many people don't appreciate this paradox. The velocity of flow is always greater as the lower pressure is less, but the weight of the flow is itself constant. The velocity is the same, but the weight of flow has this peculiar constancy, which only direct experiments pointed out. I should like to see some one investigate it from that point of view, and certainly this maximum 242 in the table is something I never saw before. I shall go over the ground myself as soon as I return.

Prof. Peabody.—In answer to Professor Denton's question concerning the coefficient of flow, it is to be said that the term is carefully avoided in the paper, since the method of calculation used is known to be defective, in that the quantity Q, in the first equation, is assumed to be zero, while we have reason to believe that it has an appreciable, but as yet unknown, value. There is also reason to believe that heat is given by the steam to the tube at or near the entrance, and that the tube gives heat to the steam near the exit. There is also a question whether steam may not be condensed on the surface of the tube near the entrance, and the resulting water blown through the tube in the liquid state, though this suggestion raises a question as to how the tube could in such case dispose of the heat given to it.

I do not think that the area of the stream of steam under consideration can be in question, because the tube was purposely

made long enough to avoid confusion with the flow through an orifice or a short tube. I would like to ask Professor Denton whether the experiments to which he refers were not made on the flow of steam through an orifice.

The calculation of the velocity of the steam in the tube by the second equation can be readily made, but it was not set down in the table, since it did not appear to throw any light on the problem. The actual velocity cannot be determined till the per cent. of moisture in the steam in the tube can be determined in some way; a determination based on the equations in the paper must have the same defect as the calculation by them of the flow, and I know of no experimental method.

Prof. Denton.—The experiments I quoted were made with tubes just as Mr. Peabody has made them—one reservoir with another connected by a tube.

Mr. Babcock.—Mr. President, I wish to say but just a word in regard to this point: that, though the experiments do not seem to carry out the theory upon which Professor Peabody started, they do seem to sustain very closely the acknowledged theory that the amount of steam flowing from one pressure into any other less than three-fifths of the initial pressure, is practically constant, and bears a very close approximate ratio to the total pressure. The first seven experiments are under these conditions. If, now, we take the flow in the fourth column and average it for the first seven experiments, we find an average of 232.8 pounds per hour. Inspection will show that the different experiments did not vary greatly from this average, with the exception of the third experiment, which varied about four per cent., but that should have been a little more on account of the pressure. Now how nearly this corresponds with the rough-and-ready rule of Professor Rankine is readily ascertained. His approximate rule is that, under those conditions, the flow in pounds per second is ^{1} of the absolute pressure per square unit of area, the same units being used for area of opening and area of pressure. Applied to the flow per hour, this rule would be 51.57 times the pressure multiplied into the area of opening. But we must notice that the pressures given in the table are "gauge" pressures, so we must add 14.7 to get the absolute pressures. The average pressure in the first seven experiments was 70.2, making 84.9 for the absolute pressure; multiplying, therefore, 84.9 by .058, the area of the opening, and by 51.57, we have 253.94 as the flow per hour. But

we are told that this theoretical flow must be reduced by a coefficient, representing the contraction of the area and friction, which coefficient is given as .93 for a short tube. Multiplying, therefore, 253.94 by .93, we have a flow of 236.16 pounds per hour, which is within 1½ per cent. of the average flow obtained by the experiments. The difference is probably due to the fact that the tube used was not properly a short tube, being thirty diameters in length, so that the coefficient would have to be slightly smaller. It would only be necessary to reduce it to .9167 to give exactly the same flow as was shown by the experiments. The third experiment, not falling into a common curve with the others, is probably an error, which may be due to the pressure not being carefully observed. These experiments were made under varying boiler pressures, the average being taken from several observations, and it is quite possible that the average pressure might have varied considerably from the observed pressure; it would only have to vary about three or four per cent. in order to have made the difference shown in the table.

The Chairman.—If there is no other discussion, Professor Peabody has the reply.

*Prof. Peabody.**—As the best and simplest way of replying to the discussion of this paper by Professor Denton and Mr. Babcock, I wish to add another diagram (Fig. 74), reduced from a plate in Mr. Buttolph's thesis, in which points are plotted to represent the several experiments, with differences of pressure for abscissæ and flow in pounds per hour for ordinates. Two series of points were plotted, one showing the actual flow and the other the calculated flow under the conditions of each experiment. Had the boiler pressure been the same for all of the experiments, the points representing the calculated flow would have fallen on a curve with no more irregularity than that coming from the tables of the properties of saturated steam used in the calculation. The deviation of the points from the curve in the figure is due to the fact that the boiler pressure was not the same for different experiments, though it was very nearly constant for each individual test.

It is noticeable that the points representing the actual flow vary from the mean curve drawn through them in the same direction, and to about the same amount as the points representing the calculated flow under the same conditions differ from the mean

* Added since the meeting.

curve of the calculated flow. This at once answers Professor Denton's query regarding experiment 3, and shows in another way what is brought out in Mr. Babcock's discussion.

It will be observed that both calculated and actual flow have a

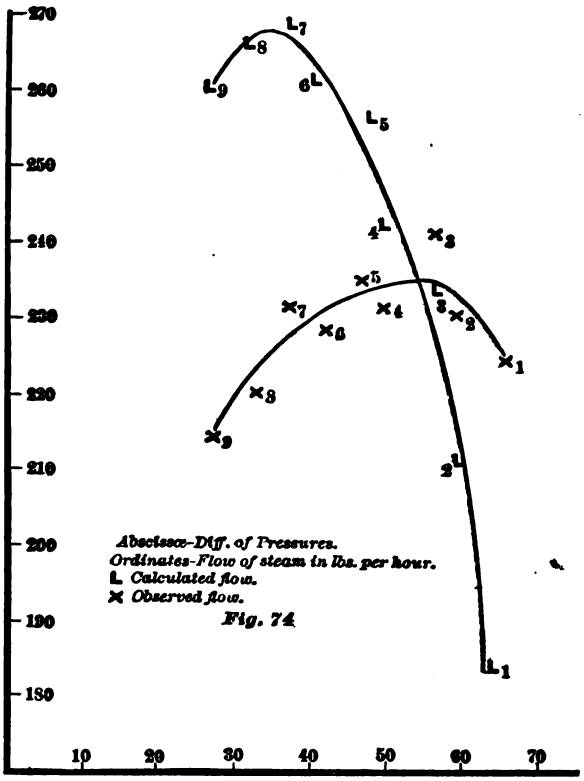

Fig. 74

maximum; the maximum calculated flow occurs at about 35 pounds difference of pressure, or at about $\frac{2}{5}$ of the absolute pressure, and the maximum actual flow occurs at about 55 pounds difference of pressure, or at about $\frac{3}{5}$ of the absolute pressure. This last agrees fairly well with the tests quoted by Professor Denton. It appears to me, however, that after making allowance for the change of boiler pressure from experiment to experiment, there is clearly a maximum to the actual flow, and that beyond that point the flow decreases with the increase of the difference of the pressures, though much more slowly than the calculated flow decreases under like conditions.

It must be observed that this maximum flow occurs only when

we are told that this theoretical flow must be reduced by a coefficient, representing the contraction of the area and friction, which coefficient is given as .93 for a short tube. Multiplying, therefore, 253.94 by .93, we have a flow of 236.16 pounds per hour, which is within 1½ per cent. of the average flow obtained by the experiments. The difference is probably due to the fact that the tube used was not properly a short tube, being thirty diameters in length, so that the coefficient would have to be slightly smaller. It would only be necessary to reduce it to .9167 to give exactly the same flow as was shown by the experiments. The third experiment, not falling into a common curve with the others, is probably an error, which may be due to the pressure not being carefully observed. These experiments were made under varying boiler pressures, the average being taken from several observations, and it is quite possible that the average pressure might have varied considerably from the observed pressure; it would only have to vary about three or four per cent. in order to have made the difference shown in the table.

The Chairman.—If there is no other discussion, Professor Peabody has the reply.

*Prof. Peabody.**—As the best and simplest way of replying to the discussion of this paper by Professor Denton and Mr. Babcock, I wish to add another diagram (Fig. 74), reduced from a plate in Mr. Buttolph's thesis, in which points are plotted to represent the several experiments, with differences of pressure for abscissæ and flow in pounds per hour for ordinates. Two series of points were plotted, one showing the actual flow and the other the calculated flow under the conditions of each experiment. Had the boiler pressure been the same for all of the experiments, the points representing the calculated flow would have fallen on a curve with no more irregularity than that coming from the tables of the properties of saturated steam used in the calculation. The deviation of the points from the curve in the figure is due to the fact that the boiler pressure was not the same for different experiments, though it was very nearly constant for each individual test.

It is noticeable that the points representing the actual flow vary from the mean curve drawn through them in the same direction, and to about the same amount as the points representing the calculated flow under the same conditions differ from the mean

* Added since the meeting.

curve of the calculated flow. This at once answers Professor Denton's query regarding experiment 3, and shows in another way what is brought out in Mr. Babcock's discussion.

It will be observed that both calculated and actual flow have a

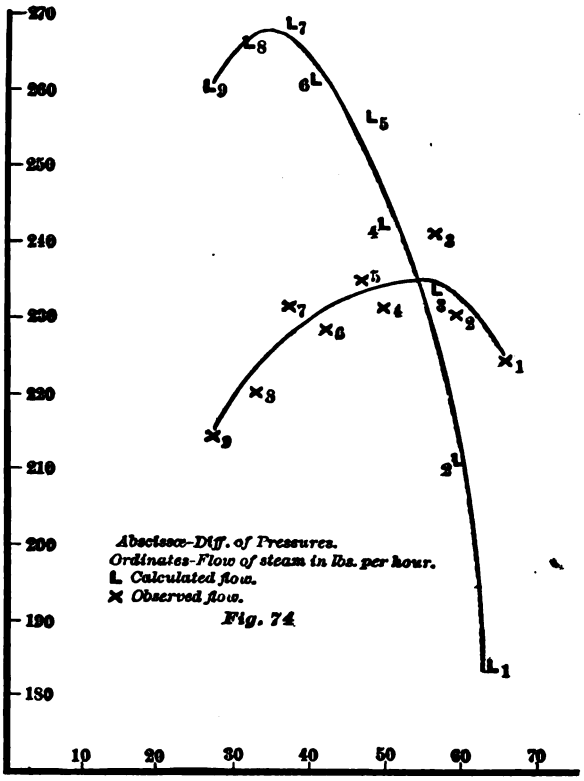

Fig. 74

maximum; the maximum calculated flow occurs at about 35 pounds difference of pressure, or at about $\frac{2}{5}$ of the absolute pressure, and the maximum actual flow occurs at about 55 pounds difference of pressure, or at about $\frac{3}{5}$ of the absolute pressure. This last agrees fairly well with the tests quoted by Professor Denton. It appears to me, however, that after making allowance for the change of boiler pressure from experiment to experiment, there is clearly a maximum to the actual flow, and that beyond that point the flow decreases with the increase of the difference of the pressures, though much more slowly than the calculated flow decreases under like conditions.

It must be observed that this maximum flow occurs only when

the superior pressure is maintained constant, and the difference of pressures is increased by lowering the inferior pressure, and that it does not occur when the inferior pressure is constant and the superior pressure is raised. Calculations under the latter assumption, and according to the method used in the paper, show that the flow from a boiler into the atmosphere increases as the boiler pressure is increased, and the experiments of Mr. Brownlee, given by D. K. Clark in his *Manual of Rules and Tables*, show the same.

The suggestion made by Rankine, and mentioned by Professor Denton in his discussion, that the pressure in the lower reservoir is that of the expanded jet of steam beyond the tube, and not that of the steam in the tube, is not inconsistent with the tests made by Mr. Buttolph. Should it be true that the pressures in the tube were higher than that in the discharge chamber, then the less difference of pressure would naturally be accompanied by a larger flow after the maximum calculated flow had been passed. I intend to extend our experiments to cover this point.

While I accept Mr. Babcock's calculations in his discussion as correct and his conclusions as just, I must beg leave to say again that the theory on which the calculations are based was known to be imperfect before the experiments were begun, and that the amount of the divergence was the object of the search; still I am ready to confess that the amount of the divergence much exceeded my anticipations. The rule referred to, *i. e.*, that the flow per second is $\frac{1}{70}$ of the absolute pressure per square unit of area, appears to me to be only a rough empirical rule, and not properly a theory at all.

It is our present expectation that the investigation shall be carried further in our laboratory, and that attention will be given to the points raised in the discussion.

CCCXXIII.

A SIMPLE CALORIMETER.

BY C. H. PEABODY, BOSTON, MASS.
(Member of the Society.)

A CALORIMETER for determining the quality of moist steam, has been devised by the writer, which depends on the property that dry steam is superheated by wire drawing, and which appears to have valuable features.

The first calorimeter of this type, made and used in the laboratory of the Massachusetts Institute of Technology, was made as follows: A piece of pipe, six inches in diameter and ten inches long, was capped at each end. Into the upper end was fitted a half-inch pipe bringing the steam to be tested, a thermometer cup, and a steam gauge. From the lower cap an inch pipe led away the exhaust steam. The supply pipe brought steam from the main steam pipe nearly overhead. Near the calorimeter was a T which formed a pocket, with a drip at the lower opening, and a branch from the side opening leading to an angle valve in the upper cap of the condenser. The pipe further was well wrapped with hair felt, and it was assumed that the steam had the same quality as in the main pipe. The calorimeter itself was wrapped in asbestos board and hair felt, and covered with Russia iron.

Two other calorimeters have been made, which differ from the first only in size. One is made of a piece of two-inch pipe, eight inches long, and the other of a piece of four-inch pipe of the same length. The only difference in the action of these three calorimeters appears to be that the smaller ones are more sensitive, *i. e.*, they respond more quickly to any change of condition.

To make an experiment, the valve in the supply pipe is opened a slight amount, about $\frac{1}{8}$ of a turn, and a valve in the exhaust pipe is regulated to give a suitable pressure in the calorimeter. After the gauge and thermometer attached become steady, their readings are taken, together with the reading of the boiler gauge.

If p is the boiler pressure, then r is the heat of vaporization, and q the heat of the liquid corresponding, and x may represent the

dry steam in one pound of the mixture drawn from the main steam pipe, so that $1 - x$ is the water or priming. The heat in one pound of the mixture is

$$xr + q.$$

Let p_1 be the pressure in the calorimeter, and λ_1 the total heat, and t_1 the temperature corresponding. Let t_s be the temperature of the superheated steam by the thermometer. Then the heat in one pound of steam in the calorimeter is

$$\lambda_1 + c_p (t_s - t_1)$$

in which c_p is the specific heat of the superheated steam at constant pressure (0.4805).

Assuming that no heat is lost

$$xr + q = \lambda_1 + c_p (t_s - t_1) \quad . \quad . \quad . \quad . \quad . \quad . \quad (1)$$

$$\therefore x = \frac{\lambda_1 + c_p (t_s - t_1) - q}{r} \quad . \quad . \quad . \quad . \quad . \quad (2)$$

and the priming is

$$1 - x \quad . \quad . \quad . \quad . \quad . \quad . \quad . \quad . \quad . \quad (3)$$

The following experiments were made on the first 6″ calorimeter. The boilers were forced during the test to supply an unusual draught of steam for heating and other purposes, and the pressure was less than the usual pressure in the main steam pipe, and fluctuated during the test.

TABLE I.

TESTS ON THE 6″ CALORIMETER.

Gauge Pressures.		Temperature in the calorimeter F.	Priming.
Boiler.	Calorimeter.		
71.2	38.5	286.7	0.011
60.3	26.8	271.8	0.012
63.0	17.5	264.9	0.013
60.6	7.0	258.8	0.011
69.0	3.7	258.1	0.012

After the smaller calorimeters were completed, all three were set up and compared. In Table II. the several groups of two and three experiments were made simultaneously.

TABLE II.

BAROMETER 14.8 POUNDS.

Size of calorimeter.	Gauge Pressures.		Temperature in the calorimeter F.	Priming.
	Boiler.	Calorimeter.		
2″	71.3	37.5	288.1	0.01
4″	71.3	38.3	288.9	0.01
6″	57.0	9.5	246.2	0.018
4″	57.0	8.4	245.8	0.018
2″	57.0	7.3	242.6	0.019
4″	60.8	4.7	246.6	0.017
2″	60.8	4.7	244.0	0.018
4″	71.2	6.2	248.4	0.02
2″	71.2	6.5	248.4	0.02
4″	73.0	6.6	251.2	0.02
2″	73.0	6.9	250.5	0.02
4″	74.5	6.8	252.5	0.019
2″	74.5	7.0	251.6	0.019
4″	75.5	6.2	253.4	0.018
2″	75.5	6.7	252.0	0.018
6″	69.8	12.0	268.2	0.012
6″	69.8	5.0	253.4	0.016

A comparison of the several groups shows that all of the calorimeters give substantially the same results.

A little consideration shows that this type of calorimeter can be used only when the priming is not excessive, otherwise the wire-drawing will fail to superheat the steam, and in such case nothing can be told about the condition of the steam, either before or after wire-drawing. To find this limit for any pressure t_s may be made equal to t_1 in equation (2); that is, we may assume that the steam is just dry and saturated at that limit in the calorimeter. Ordinarily the lowest convenient pressure in the calorimeter is the pressure of the atmosphere or 14.7 pounds to the square inch. Table III. has been calculated for several pressures in the manner indicated. It shows that the limit is higher for higher pressures,

but that the calorimeter can be applied only where the priming is moderate.

TABLE III.

PRESSURE.		Priming.
Absolute.	Gauge.	
300	285.3	0.077
250	235.3	0.070
200	185.3	0.061
175	160.3	0.058
150	135.3	0.052
125	110.3	0.046
100	85.3	0.040
75	60.3	0.032
50	35.3	0.023

When this calorimeter is used to test steam supplied to a condensing engine, the limit may be extended by connecting the exhaust to the condenser. For example, the limit at 100 pounds absolute, with 3 pounds absolute in the calorimeter, is 0.064 instead of 0.046 with atmospheric pressure in the calorimeter.

In case the calorimeter is used near its limit, that is when the superheating is a few degrees only, it is essential that the thermometer should be entirely reliable, otherwise it might happen that the thermometer would show superheating when the steam in the calorimeter was saturated or moist. In any other case a considerable error in the temperature would produce an inconsiderable effect on the result. Thus, at 100 pounds absolute with atmospheric pressure in the calorimeter, 10° F. of superheating indicates 0.035 priming, and 15° F. indicates 0.032 priming. So also a slight error in the gauge-reading has little effect. Suppose the reading to be apparently 100.5 pounds absolute instead of 100, then with 10° of superheating the priming appears to be 0.033 instead of 0.032. It is, however, to be remarked that no gauge is to be trusted for such work unless it has been compared with a correct mercury column.

It is of interest to compare this calorimeter with the Barrus superheated steam calorimeter* more especially as that calorimeter can be most advantageously applied with steam of moderate or low pressure, at which the new calorimeter has a narrow limit. It is

* Trans. A. S. M. E., Vol. VII., p. 178, and Vol. VIII., p. 235.

scarcely necessary to recall the fact that in the Barrus calorimeter the steam to be tested is dried and superheated in an instrument resembling a surface condenser, by a stream of highly superheated steam. To show the difference between the two types of calorimeter, the following table has been calculated on the assumption that the superheated steam has an initial temperature of 500° and a final temperature of 10° above the temperature of saturated steam of the given pressure, while the moist steam is supposed to be dried and superheated 5°. It will be seen that the limit under these conditions is widest for lowest pressures and that it is narrower at high pressures than that of the new type. While the limit is determined by arbitrarily assumed conditions, it is believed that it will be found narrower rather than wider in practice.

TABLE IV.

BARRUS SUPERHEATED STEAM CALORIMETER.

PRESSURE.		Priming.
Absolute.	Gauge.	
50	35.3	0.170
75	60.3	0 095
100	185.3	0.086
125	110.3	0.078
150	135.3	0.071
175	160.3	0.065
200	185.3	0.059
250	235.3	0.049
300	285.3	0.040

DISCUSSION.

Prof. Jas. E. Denton.—I will make one remark about the calorimeter. I expect I will have my hands full to-morrow when I read a paper on the subject. The thermo-dynamic formula there is open to two queries: You do not know the specific heat of steam at any but atmospheric pressure. The common figure .480 was determined by Regnault for atmospheric pressure only. It has never been determined experimentally for any other pressure. There is a calculation, I think, by Zeuner, surmising what it would be for other pressures, and I think there can be a question raised there as to whether that heat which is originally in the steam,

$xr + q$, will appear again as the latent heat of the lower pressure, plus temperature. The latent heat of steam is something which you have to determine in operations that you go through to make the steam have a particular value. Still, I am not sure about that.

Prof. Peabody.—This calorimeter may be used, and perhaps may preferably be used, with the pressure in the calorimeter at or near atmospheric pressure, and in such case Regnault's value for the specific heat of superheated steam may be used with confidence. On the other hand, if the instructions in the paper to so regulate the pressure in the calorimeter that the steam shall be superheated a few degrees only, be followed, a considerable error will not be introduced by the use of the same value for the specific heat, even though it should be true that it varies with the pressure.

In Zeuner's theory of superheated steam, the specific heat at constant pressure is assumed to be constant, and according to that theory it results that the specific heat at constant volume varies. Hirn assumes that the specific heat at constant volume is constant, and then shows that the specific heat at constant pressure must vary. Either theory must be considered to be provisional, and can be justified by its convenience and general agreement with other experimental data only.

CCCXXIV.

A SYSTEM OF WORM GEARING OF DIAMETRAL PITCH.

BY S. W. POWEL AND W. L. CHENEY, HARTFORD, CONN.
(Members of the Society.)

THE advantages of the diametral pitch for gearing have long been recognized by engineers in this country, as may be seen in the very general use of this method of making spur and bevel gears by our leading tool makers and machine manufacturers. This fact calls our attention to the desirability of gaining corresponding advantages for worm gears by applying the diametral system to them.

It is quite likely that the principal reason for retaining the circumferential pitch for worm gearing is that ordinary lathes are arranged for cutting a certain number of threads per inch, which in the case of a worm calls for a certain number of teeth per inch of circumference of the worm gear, or in other words, a gear of circular pitch; whereas, if a worm gear of diametral pitch were to be used, it would be necessary to have the lathe cut a certain number of thread per π inches, in order that the worm and gear might correspond. We will endeavor to show farther on how closely we can approximate to this requirement.

There is confusion generally in the shops which use both circumferential and diametral pitches for spur and bevel gearing, as many do where patterns are on hand for gears with cast teeth of circumferential pitch, and where cut gearing is made of diametral pitch. This confusion causes an unnecessary waste of time and often consigns a good casting to the scrap heap; it could be avoided so far as spur and bevel gears are concerned, by making all such gears of diametral pitch, and all confusion might be avoided by making worm gearing also of diametral pitch.

Just here we would like to call attention to the nomenclature in regard to pitch which prevails to a great extent in our New England shops, and probably to a less extent in other parts of the country. We say "*three pitch*," "*four pitch*," "*five pitch*," etc., where others say three per inch, four per inch, five per inch, etc.

If the qualifying words *per inch* are applied to diametrally divided gears only, and the word *pitch* is used in its correct sense, and applied exclusively in the case of gears to those of circumferential pitch, the confusion would no doubt be lessened where both systems are used. In this paper we will use the expression diametral pitch as referring to that part of the diameter of a gear required for one tooth, measured in inches or fractions of an inch; i.e., the reciprocal of the number of teeth per inch of diameter.

It is not our intention to go into the theory of gearing any further than to call attention to the fact that our leading constructors of machinery who use the circumferential pitch use various proportions for the length of tooth as well as different approximations to the two general shapes for the working surfaces, i.e., involute and epicycloid, and also different amounts of clearance. This is to a less extent true for the diametral pitch, as the makers of cutters for involute and epicycloidal teeth of the smaller pitches generally make the length of tooth equal to twice the diametral pitch plus the clearance, which is usually one-eighth of the diametral pitch, and allow no side clearance or backlash.

In applying the diametral system to worm gearing we are confronted with probably more variations in the proportions of teeth now in use than are found in the other kinds of gearing, and some of these shapes are no doubt the result of expensive experiments.

What we propose is to cut the worm thread to a fractional pitch corresponding to one of the diametral pitches now in common use; make the tooth the same length in worm gearing as is now used in spur gearing of diametral pitch, and make no change as to clearance on the top and bottom of the thread, if there is any allowed. Our opinion is that in general there should be some clearance but no backlash.

As to the length of tooth, we are aware that many machine tool makers now use a tooth proportional in length to that of diametrally divided spur gears. For those who have other proportions in use we advise a change in length of tooth as preferable to a change in the angle of the thread, and in those cases where experimental data are the basis of the shape of worm thread, we think this change would be the less noticeable of the two.

We propose to thread the worms by means of a pair of transforming gears put into the train of change gears of any ordinary lathe. We know that many small and medium-sized lathes are made with the change gears in line, and here some provision

would have to be made for compounding. This can be done in a great number of cases with very little expense by making the larger of the transforming gears "dished," or with the rim offset outwards, and also making a new intermediate stud long enough to take the smaller of the transforming gears together with the gear which would be put on the spindle in ordinary screw cutting. In this arrangement the larger transforming gear would be put on the spindle. Other arrangements will readily suggest themselves.

As to the accuracy of threads cut by the proposed method; if we use the ratio of 22 to 7 for our transforming gears, the difference between the thread cut and the theoretical pitch required will be less than five one-thousandths (0.″005) of an inch in one foot, neglecting errors of expansion and inaccuracies of the lead screw. Thus we see that the thread we get differs from the theoretical thread by an amount less than the errors of usual good workmanship; indeed it is less than the variation between ordinary lead screws.

Now as to the method of using the transforming gears. If we make the larger gear of the two dished as previously suggested, and mark it plainly *spindle gear for worms*, make the smaller gear to go on the outside of the compound intermediate stud and mark it *meshes into spindle gear for worms*, or make and mark both of the transforming gears in some unmistakable way, the lathe man will be able to cut a worm to suit any diametrally divided worm gear by using the transforming gears in the places where they are marked to go, together with the change gears required for cutting a screw having the same number of threads per inch of length as the required worm gear has teeth per inch of diameter.

To illustrate: suppose we want to cut a worm for a gear of four teeth per inch of diameter, "four pitch," or one-quarter inch diametral pitch, whichever you choose to call it, and the index for four threads per inch, on the lathe we are to use, calls for 84 on stud with 28 on the screw. We put the 28 on the screw, the 84 on the inside of the compound intermediate, the two translating gears in the places for which they are marked, and go ahead.

Our thread will be practically 0.7857142 inches pitch, whereas theoretically we should get 0.7853982 inches pitch. The difference between these pitches multiplied by the number of times the theoretical pitch is contained in 12 inches it will be seen is a little less than 0.005 of an inch.

Some of the advantages which we would gain by adopting this system for worm gearing are, doing away with the odd sixty-fourths and thousandths in the diameters of worm gears, and making their diameters come in even fractions; getting even figures in center distances between worm gear shaft and worm shaft or their bearings; doing away with considerable work in calculations in the drawing room, in which there is always a chance for errors; and if in addition to using the diametral pitch and length of tooth we make the worm gears straight across the face, which in most cases seems to us to be practically as good as the more expensive way of making the points of the gear teeth follow the shape of the bottom of the worm threads, the lathe man need not know whether the blank he was turning was to be a spur or worm gear. However, we would suggest that the corners of the faces of worm gears be slightly rounded, so as to show the man who cuts the gears which are to be spurs and which to be cut for worms.

Having shown the possibility of applying the same diametral system to worm, as is now in use for spur and bevel gearing, it remains for some of our gear makers to give us a practical example of this application.

DISCUSSION.

Mr. T. S. Crane.—Before I read this paper my attention had been called to a rack-cutting machine, in which the transforming gear bore the proportion of 21 to 22, and the difference in these two proportions struck me as so peculiar that I made a little cal-

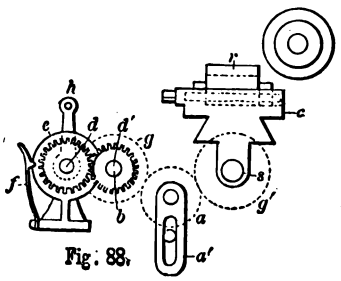

Fig. 88.

culation and discovered the cause of it. The elements of the machine, shown in Fig. 88, were a bed, *c*, on which the blank *r* could be placed, a feed screw, *s*, connected with it in the usual way, and a hand shaft, *d*, with a crank, *h*, for turning it around, with a locking device, *e f*, so that you would always turn the hand shaft

an exact revolution. This hand shaft, *d*, instead of having the change wheels *g g'* applied to it and to the end of the feed screw, operated an auxiliary shaft, *d'*. The hand shaft having the locking device *e f* was provided with a gear of 22 teeth, and the intermediate shaft *d'*, upon which the change wheels were applied, had a gear of 21 teeth. It is obvious that the intermediate shaft *d'* would revolve $\frac{1}{22}$ faster than the other, and the result was that this screw *s*, which was $\frac{1}{2}$ inch pitch, would feed the blank to cut a rack tooth to correspond with a wheel of 6 to the inch pitch. That 6 to the inch pitch is equal to this decimal of an inch, .5236. The change wheels *g g'* were connected by an intermediate gear *a*, as in screw-cutting lathes. Now, the reason why that ratio of 21 to 22 is correct arises from this fact, that what we call the "diametral" pitch of "6 to the inch" corresponds to $\frac{1}{6}$ the circumference of a circle 1 inch in diameter. A circle 1 inch in diameter has 3.1416 circumference; $\frac{1}{6}$ of that is .5236 of an inch. The pitch, therefore, of a tooth "6 to an inch" in pitch is a little over $\frac{1}{2}$ an inch, and the reason why the gears come 22 to 21 in proportion is because, if you assume the diameter of a circle to be $\frac{1}{2}$ inch, which is the pitch of the screw *s*, the circumference of this half-inch circle would have to be divided into three parts, to get the same figure, .5236. Now $\frac{1}{3}$ of a circle $\frac{1}{2}$ inch in diameter is the same as $\frac{1}{6}$ of a circle 1 inch in diameter, that is, .5236, and the ratio of these gears is in the ratio of the diameter of the circle and $\frac{1}{3}$ of its circumference. Now, the diameter of the circle we will assume is 7, and the circumference being 22, $\frac{1}{3}$ of the circumference would be $7\frac{1}{3}$. The ratio between 7 and $7\frac{1}{3}$ is 21 to 22. By using change wheels of equal diameter upon this intermediate shaft, which revolves in a suitable proportion, the rack carriage would be moved suitably to cut a pitch of six to one inch, and by altering these change wheels, as you do in a screw-cutting lathe, you could move this screw faster or slower, but always in this peculiar ratio. You would always get the diametral pitch as the feed of the screw. By putting on other change wheels, you could get teeth of larger diametral pitch, the change of rotation between the hand shaft *h* and the screw *s* being in the proportion of 22 to 21 all the time.

One consideration has occurred to me in respect to the use of this system for cutting worm wheels, and that is, that in my experience a worm wheel never operates on a worm the same as a spur wheel operates on another spur wheel, but the divergence of the lines of

the teeth from the center of the wheel, which is of no consequence in spur wheels, can be compensated for in the case of a worm, where a straight line is opposite to those two radial lines, by diminishing the pitch of the spur wheel in some measure. It has been a very successful practice in shops I have been connected with, where the pitch is under ½ inch, to cut the teeth by the Manchester rule of diametral pitch by regarding the exterior of the wheel as the pitch circle, and it has proved very convenient. The worm teeth match the worm quite accurately where they are obtained by that rule instead of assuming the true pitch circle as the proper line.

I would like to mention that the rack-cutter I have referred to is manufactured in Newark, N. J., by Gould and Eberhardt, and is their own invention.

*Mr. S. W. Powel.**—As to the ratio of transforming gears for rack-cutting machines, it is immaterial whether you use a ratio of 7 to 22 or 21 to 22, provided you have the change gears necessary to arrange the machine for the work in hand.

Since the meeting at Scranton, one of the writers has seen a change-gear table for rack-cutter, made about ten years ago at the Pratt & Whitney Co.'s works in Hartford, Conn., in which a set of lathe change gears was used with the addition of one other gear, and which gives all the diametral pitches in common use.

Now, as to taking the outside diameter of a worm gear as the pitch diameter, we are convinced that this is not correct, and can give an instance in which we are supported by the practice of one of our best tool shops. A worm and gear were designed to run together, having bearings for both shafts bored in the same casting, and therefore not adjustable. By some mistake the gear was cut with one tooth less than the correct number, and it was a failure. Another gear was made, and, by order of the foreman who was building the machine, was cut with one tooth more than the correct number, and was likewise a failure. A third gear made and cut correctly is no doubt in the machine yet.

Where a small worm drives a gear with a large number of teeth under light duty, we are aware that one tooth more or less makes very little difference in the running of the mechanism. But where a large worm of quick pitch is used to drive a gear with few teeth, it is our opinion that the correct number of teeth will be found more satisfactory than an incorrect number.

* Author's closure, under the Rules.

CCCXXV.

THE MECHANICS OF THE INJECTOR.

BY J. BURKITT WEBB, HOBOKEN, N. J.
(Member of the Society.)

THE fact that the injector wastes no heat except a small amount by radiation, is usually accepted as proving that the instrument has a very high efficiency; when, however, we make a careful comparison of it with a good steam pump, which forces its water through a heater heated by exhaust steam, we may be surprised to have the latter come out the best. I desire to call your attention to a mechanical principle upon which the injector works, and to show that it is an unfavorable one, and one which accounts largely for the difference in favor of the steam pump.

If a mass of clay or putty be projected against an equal mass at rest it will set it in motion and the two united masses will move on with half the velocity given to the first mass; if, however, the projected mass contains but one-tenth, instead of one-half of the whole amount, the final velocity will be but a tenth of that of projection.

The principle governing such cases is called in mechanics the "*conservation of the motion of the center of gravity*," which means that the velocity of the center of gravity of the united masses is the same as the velocity of their center of gravity before they united.

In the first instance, the two masses being equal, their center of gravity lies always midway between them, and therefore moves along with half the velocity of the projected mass; after impact the center of gravity is in the center of the united mass, and as the *impact does not alter its* * *velocity*, we know at once what velocity the united mass must have. In the second case one-tenth of the mass being in the striking and nine-tenths in the struck mass, the center of gravity will lie nearest the latter and at a distance from it equal to one-tenth of the distance separating the two masses. The velocity of the center of gravity will therefore be one-tenth of the

* The velocity of the center of gravity.

velocity of projection, and consequently the masses after uniting will have a velocity of one-tenth that of projection.

In both these cases, supposing the first mass to be m_1 and the second to be m_2, and representing the velocity of the first mass by v and that of the center of gravity by V, we find that before impact the energy is $\frac{1}{2} m_1 v^2$, while after impact it is only $\frac{1}{2}(m_1 + m_2) V^2$. In the first case $m_1 = m_2$ and $V = \frac{1}{2}v$, so that half the energy disappears at impact, being converted into heat by the blow and lost. In the second case, $m_1 + m_2 =$ ten times m_1, and V is only one-tenth of v, consequently the energy after impact is but one-tenth of what it was before, or nine-tenths is lost by the blow.

Looking more closely into the condition before impact, we see that the energy consists then of two parts, viz.: the energy of the whole system of two masses, moving with the velocity V, and the energy with which the two masses approach each other, that is to say, we may calculate the energy on the principle that the pair of masses is moving forward with the velocity V of their center of gravity, and then that mass one has an additional forward velocity $= V$ in the first case, and $9\ V$ in the second, while mass two has an additional backward velocity $= V$ in both cases, thus causing the latter mass to stand still and making the velocity of the first mass $= v$.

Having made this division of the energy, we find, as might be expected, that only the first part of the energy is preserved while the energy of approach is lost by the blow; and this holds for all bodies which are not sufficiently elastic to separate again after the blow is struck.

Now, in the injector, the water is almost at rest when it is struck by steam, moving with a high velocity, and thus set in motion. If the steam is, say, one-fifteenth of the water, the velocity of the mixture will be but one-sixteenth of that of the steam, and fifteen-sixteenths of the mechanical energy of the moving steam will be lost by the blow. This mechanical energy has been developed by allowing the steam to flow from the boiler into the vacuum chamber and thus to get up a high velocity, but, however economical such a method of generating mechanical power from steam may be, it is neutralized by the wasteful way of using the power, for impact is, as has been shown, a wasteful method. In this respect the injector is like a slowly moving impact water-wheel, where almost all of the kinetic energy acquired by the water in running down to

the wheel may be lost in heat when the water strikes and dashes into foam; and yet in such a wheel, were it desirable to warm the water, it might be claimed that no energy was lost.

In the injector a greater part of the energy even than calculated is lost by the blow, from the fact that it is not struck exactly in the direction in which the water is to move.

In reasoning upon the efficiency of the injector it is not enough to state that no heat is wasted, because there would be none wasted if the steam were condensed into a tank of water for the purpose of heating it, while if our object were to get mechanical power it would all be wasted, whereas in a proper engine we might get out of it the legitimate amount of power. The steam used by the injector is at boiler temperature, whereas the heat when returned is at feed-water temperature, and we should therefore charge against the injector the amount of power which a good engine working between these temperatures would develop from the amount of steam used by the injector, and not credit it with heating the feed-water, except so far as we might not be able to do so with exhaust steam.

DISCUSSION.

Mr. Wm. Kent.—Prof. Webb is no doubt correct, if we consider the injector as a means of raising water from one level to a higher one, but if it is used for feeding water into a boiler, say from a tank on or above the boiler level, then the injector has a perfect efficiency, less the heat lost by radiation, which, if the injector and pipes connected to it are felted, is almost nothing. In this case the efficiency is the same as that of a steam trap, which feeds a boiler without any expenditure of energy other than that necessary to open and close the valves, and loses no heat except that due to radiation from its external surface. As a pump for lifting water, the injector is very inefficient, but as a boiler feeder, its efficiency is almost perfect.

Prof. Jas. E. Denton.—In this paper Prof. Webb gives a physical interpretation of the limits imposed upon the mechanical execution of an injector, which, I believe, is original with him, and is certainly a very welcome addition to any previous mathematical treatment of this subject. The discussion of the distribution of energy in an injector by equations of momentum is nothing new. All mathematical discussions of the instrument have presented

such equations. For example, as is well known to American students, these equations appear in the little Science Series Volume by M. Leon Pochet.

But it has never been deduced from these equations in plain terms, why the injector, which, under the law of momentum, may at first use steam to the full limit of expansive action, finally realizes a mechanical result of far less value than a pump which acts without expansive action. To illustrate :

If an injector works with steam of 100 pounds absolute pressure, the law of *vis viva*, which governs the flow of steam, requires that the work which the steam devotes to the action of the injector shall be the area ABCDEA * (Fig. 95), which is the same work

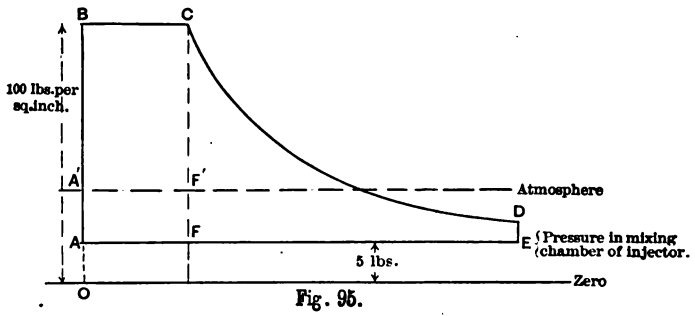

Fig. 95.

that a steam engine expanding 20 times would theoretically realize from an expenditure equal to the total heat of the weight of steam represented by the volume BC. On the other hand, a steam pump working without expansion would realize from the same expenditure of heat, simply the useful work represented by the area, ABCFA.

Now, assuming that in the pump there is neither loss by clearance nor cylinder condensation, the area, A'BCF'A', if BC represented a pound of steam, would be

$$(100 - 14.7) \times 144 \times 4.3 = 52632 \text{ foot-pounds,}$$

4.3 cubic feet being the volume of a pound of steam at 100 pounds pressure per square inch.

On the other hand, the area ABCDEA, OA being 5 pounds pressure per square inch, is 156,542 foot-pounds, or fully three times as much effect as the pump for the same expenditure of heat.

* The diagram is slightly in error, as the point D should coincide with E.

But as a matter of fact the best practical duty* of an injector is about 2,000,000 foot-pounds, against 10,000,000 for a direct acting boiler feeding size of pump.

In other words the practical pumping effect of the pump is five times that of the injector. What then has become of the great superiority of the injector, which the equations of *vis viva* and of momentum indicated should be as 3 to 1?

It is not due to radiation, for this loss is greatest in the pump. It cannot be anything akin to cylinder condensation, for this exists only in the pump and there to the enormous extent of over $\frac{1}{2}$ of the total feed water. It is directly from this point of view, that Prof. Webb's deduction comes to our rescue, by showing us that, although the injector may and does initially endeavor to devote three times more of the heat in the steam to mechanical pumping effect, yet because such effect has to convey itself to the feed water by impact, not less than $\frac{15}{16}$ of the work represented by ABCDEA, can avoid being changed back from the form of mechanical work into heat, when the small mass of swiftly moving steam collides with a mass of water fifteen times as great, as is the case under the most usual conditions of the working of injectors.

Instead, therefore, of realizing 156,540 foot-pounds from the expansive area ABCDEA, we have only $\frac{156540}{14}$ = about 11,000 foot-pounds. Without the effect of cylinder condensation, we therefore have by Prof. Webb's theorem,

$$\text{Useful effect of injector} = \frac{11000}{52632} = \text{about } \tfrac{1}{5} \text{ of pump.}$$

But as the cylinder condensation in the case of the pump is known to reduce its efficiency by at least $\frac{1}{2}$, we have, by Prof. Webb's theorem, including cylinder condensation in the pump,

$$\text{Useful effect of injector} = 2 \times \tfrac{1}{5} = \tfrac{2}{5} \text{ of pump.}$$

This result is now again inconsistent with practice, because we have stated that by experiment,

$$\text{Useful effect of injector} = \tfrac{1}{5} \text{ of pump.}$$

But Prof. Webb further points out that unless the directions of the particles of steam at the instant of striking the water are exactly parallel with the direction of the flow of the feed water, only

*By the term *duty* is here meant the popular measure of the efficiency of pumping machines, viz., number of foot-pounds of useful work per 100 pounds coal consumed.

a fraction of the $\frac{1}{14}$ part of area ABCDEA, Fig. 95, will remain as mechanical effect. Now, as a matter of fact, it is quite reasonable to suppose that many particles of steam rush from the steam pipe *o*, Fig. 96, in directions *oa*, *oc* oblique to the direction *ob*, and it is only necessary to suppose that about 50 per cent. of the weight of the steam does so act, in order to bring the theory

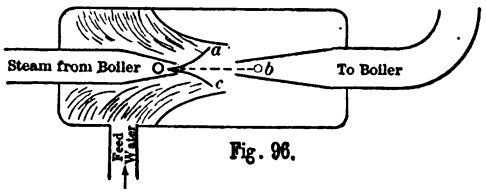

Fig. 96.

into harmony with experiment in assigning to the injector $\frac{1}{5}$ the useful effect of a pump, considering the injector *as a pump only*.

The following table * shows the actual ratio of the injector to the pump as a boiler feeder, giving it full credit as a feed-water heater as well as a pump.

TABLE I.

General Conditions.—Pressure of steam in boiler 80 pounds per square inch above the atmosphere, the boiler fed in one case by a direct acting steam pump, having a duty, when no feed-water heater is used, of 10,000,000 foot-pounds per 100 pounds of coal, and in the other by an injector which heats the feed water from 60 deg. to 150 deg. Fahr.

Temperature of feed water as delivered to the pump or to the injector, 60 deg. Fahr. Rate of evaporation of boiler, 10 pounds of water per pound of coal from and at 212 deg. Fahr.

METHOD OF SUPPLYING FEED WATER TO BOILER.	Relative amount of coal required per unit of time, the amount for a direct acting pump, feeding water at 60 deg., without a heater, being taken as unity.	Saving of fuel in per cent. of amount used, if the boiler is fed by a direct acting pump without heater.
Direct acting pump, feeding water at 60 deg., without a heater	1.000	.0
Injector feeding water at 150 deg., without a heater	.985	1.5 per cent.
Injector feeding water through a heater in which it is heated from 150 to 200 deg.	.938	6.2 " "
Direct acting pump feeding water through a heater, in which it is heated from 60 to 200 deg.	.879	12.1 " "
Geared pump, run from the engine, feeding water through a heater, in which it is heated from 60 to 200 deg.	.868	13.2 " "

* From article on "Efficiency of Pump *vs.* Injector," by Prof. D. S. Jacobus.—See Stevens Indicator, April 15, 1888.

CONCLUSION.

By Prof. Webb's theorem, it appears that while the injector, considered as a pump, at first permits steam to work with the *full* advantage of expansive action and thereby transforms a greater per cent. of heat into work than a pump, yet all such advantage is lost by the retransformation of about $\frac{29}{30}$ of the expansive work into heat by oblique impact, thereby making the efficiency of an injector about $\frac{1}{8}$ of a non-expansive steam pump, notwithstanding that such pumps, when of small size, waste over twice as much steam by cylinder condensation as is necessary to fill their cylinders.

Prof. Webb.—I gather from Mr. Kent's remarks, and the questions of others who are interested in my paper, that I have not been sufficiently explicit in the opening and closing paragraphs. I have, therefore, inserted a line in the former, to the effect that the pump works in connection with a heater, and will now endeavor to explain more thoroughly what I mean in the latter.

In this closing paragraph I would point out how the fact that the injector loses no heat is reconcilable with the other fact that it is not generally the most economical device for feeding a boiler; I say "generally," because if the injector is operated by exhaust steam, or if there is no exhaust steam available for heating the feed water, the injector is economical enough.

To see the matter clearly, it must be borne in mind that coal may be burned either (*a*) for the purpose of heating a quantity of water to be used as *hot water*, as, for example, where water is needed at, say, 212° for cooking purposes, or where it is to be used for dyeing and other purposes in the manufacture of cloth, or it might even be fed to a steam boiler as feed water; or (*b*) for the purpose of heating water from, say, 212° to some higher temperature so as to generate *steam* to be used in an engine for the production of *mechanical power.*

For the purpose (*a*), we may, if we please, generate steam in a boiler, and blow it into a tank of water to heat it, but steam at 130 pounds pressure is no better for this purpose than steam at 50 pounds, and the only economy possible is to avoid *loss of heat.*

On the other hand, for the purpose (*b*), the thing that we want is the steam, and steam at 130 pounds is about twice as valuable in a non-condensing engine as steam at 50 pounds; *i. e.*, steam at 347° is twice as valuable in such an engine as steam at 280°, so

that we may economize not only by avoiding loss of heat, as in (*a*), but by avoiding *loss of temperature.*

An analogous case presents itself in the use of water. For purposes of washing, water is no better drawn from a mill-pond than it is when taken from the tail-race, and the only economy possible is to avoid the *loss of water;* but for the generation of mechanical power, it is twice as valuable when taken from a mill-pond at an elevation of 20 feet as when it comes from one at but 10 feet elevation. In this case we may avoid not only the loss of water, but economy requires also that *loss of head* be avoided.

In feeding a steam boiler with water two things are necessary: First, there is a certain amount of *mechanical work* to be done in forcing the water in, which is equal to the volume of the entering water multiplied by the difference of pressure within and without the boiler, or more strictly by the difference between the pressure in the boiler where the water enters and the pressure in the tank from which the feed water is drawn plus the pressure corresponding to the height through which the water may be lifted; and, Second, the water is to be heated from the temperature of the water in the tank, to some higher temperature at which it is considered advisable to furnish it to the boiler. This will require a number of units of *heat*, equal to the weight of water furnished, multiplied by the rise in temperature. The first thing can only be accomplished by the expenditure of live steam or its equivalent, while for the second there is generally an abundance of exhaust steam available.

Now, to say that the injector wastes no heat is to a certain extent an evasion, because although it is literally true that it wastes none directly, it is equally true, that by warming the feed water with high pressure steam, it prevents the use of the exhaust steam for that purpose, and therefore indirectly causes the waste of as much heat in the exhaust steam as is needed to warm the water. Or, to put the thing otherwise, to say that the injector wastes no heat is to hide a defect; true it wastes no heat itself, but it *wastes temperature*, which is all that makes the heat valuable for generation of power.

Whatever steam the injector uses in doing the *mechanical work* of forcing in the feed water is no doubt well enough used, but the whole amount of steam drawn from the boiler is out of all proportion to the work done, say four times as much as a non-

expansive direct acting steam pump requires, and the most of the steam is used simply to warm feed water.

To still further clear up the subject I will add, at the suggestion of Prof. Denton, who has kindly given me a number of useful hints as to the points to be made clear, some illustrative examples, bringing out the way in which the injector makes its wasting capacity evident, before which, however, there are two other points of Mr. Kent's criticism to reply to.

As to whether the injector raises water or takes it from a tank higher than the boiler does not affect the question in the least; it simply alters somewhat the *amount* of work to be done in transferring the water from the tank into the boiler, lifting the water even 15 or 20 feet is a small part of the work to be done in feeding a high pressure boiler, and the question under discussion is not just how much mechanical work there is to be done, but whether the injector can do it economically, and I think I have shown that it cannot.

As regards Mr. Kent's comparison of the injector with a steam trap, so far as the two instruments resemble each other, the criticism of the injector applies also to the trap. We may take some future occasion to discuss the exact action of a trap, and are having one set up at Stevens Institute for experimental purposes.

ILLUSTRATIVE EXAMPLES.

I. Suppose a boiler, capable of furnishing a maximum of 16 pounds of steam per minute, at 80 pounds pressure above the atmosphere when fed with water of 150° temperature, to be running an engine, out of which we desire to get as large a H. P. as possible to run a mill. A test is made of this H. P., and to make it as large as possible we feed the boiler by a hand pump, which forces the water through a heater in which it is heated from 60° to 150° by the exhaust from the engine. The work of feeding the boiler with 16 pounds of water is

$$\frac{16 \div 62.5 \times 144 \times 80}{33{,}000.} = .056 \text{ H. P.}$$

and this being done by manual labor on the force pump is transmitted by a direct push through the mass of water and steam to the piston of the engine, where it reappears as part of the indicated H. P.

Assume that the test shows that the utmost that can be done with boiler and engine is 32 H. P., all of which is now available to run the machinery of the mill.

II. Suppose now that the force pump is to be driven, as a regular thing, by a belt from the engine, then we shall have left for running the mill only 32 − .056 = 31.944 H. P.

III. Suppose that we provide in addition a non-expansive direct acting steam pump, which can be used when the geared pump is out of order and when the engine is not running. Such a pump is known to require about one-fourth of a pound of steam for every 16 pounds of water forced into an 80 pounds pressure boiler, using therefore one sixty-fourth of the whole supply of steam, and consequently reducing the performance of the engine by one sixty-fourth, so that we shall have for running the mill only 32 − .5 = 31.5 H. P.

IV. But the steam pump may fail and so an injector is put in. An injector takes about 1 pound of steam for every 16 pounds feed water drawn from the 60° supply and furnished to the boiler at 150°, and so our available steam is cut down from 16 pounds to 15 pounds per minute, and the H. P. of the engine from 32 to 30 H. P. To make sure that this is a correct calculation, we may remember that the utmost capacity of the boiler is to evaporate 16 pounds per minute from feed water at 150° into steam at 80 pounds, and that the injector does no more than furnish 16 pounds feed per minute at 150°, while it takes 1 pound of steam per minute to run it.

The heater is thrown out of use when the injector runs, and consequently the heat of exhaust otherwise used to warm the feed water, is allowed to waste. This waste equals 16 pounds × (150 − 60)° = 1440 B. T. U. per minute to be charged against the injector.

To see that the injector wastes temperature we observe in this case that the injector warms the water with live steam at 80 pounds while the heater does it with steam at say 18 pounds, now the exhaust steam is of no use to run the engine, because its temperature is too low, while the value of the 80 pounds steam in running the engine is in consequence of its high temperature and consequent high pressure, so that the temperature makes the difference between the valuable and the almost worthless steam and, therefore, in using the live steam, the injector wastes the higher temperature of that steam.

CCCXXVI.

ON THE IDENTIFICATION OF DRY STEAM.

BY JAMES E. DENTON, HOBOKEN, N. J.

(Member of the Society.)

INTRODUCTION.

DRY steam is understood to be saturated* steam corresponding to a given pressure, and the latter is understood to be identified by the relation between pressure and temperature and latent heat, determined by Regnault's experiments, the results of which are presented in tabular form in all publications upon the properties of steam. For example, saturated* steam for 90 pounds pressure per square inch should be at 320 degrees temperature, Fahr., and should possess latent heat equal to 808 British thermal units. We also know, through the labors of Messrs. Fairbairn & Tate, that such

* The term "saturated," as applied to steam, appears to be sometimes understood as referring to a condition of wetness, whereas it implies the most perfectly gaseous condition of steam possible without the existence of superheating. The term "saturated" originates in the presentation of the laws of vapors in treatises on physics, where the vapors of water, ether, etc., are supposed to be confined in a space above a surface of some liquid, such as mercury, other than that belonging to the vapors. If water is introduced, drop by drop, into a space at the top of a closed mercury column, at say 60° Fahr. where less than the pressure of the atmosphere prevails, such water will flash into vapor until the space is under a tension equal to the pressure of steam corresponding to 60° temperature. Then if more water be introduced into the space, it refuses to vaporize, but accumulates as liquid water on the surface of the mercury, and consequently the space, and hence the vapor in that space, is said to be "saturated." Before the space or vapor is thus saturated, the vapor of water present is "non-saturated" steam, and if compressed, its pressure increases without causing any liquefaction, the vapor following the laws of fixed gases, like air, etc. When the *space* or vapor becomes saturated, any compression of the vapor does not result in increased pressure (the temperature being assumed constant), but instead some vapor liquefies. Similarly the steam in a practical boiler (where there is always liquid water beneath the steam) is saturated, because any effort to make a given weight of steam occupy less space, either by raising the water level or by other compression of the steam, causes a portion of this weight of steam to liquefy without changing the vapor tension, *assuming the temperature of the contents of the boiler to remain constant.* The only condition at all practical corresponding to "non-saturation" as described in physics is when steam is superheated.

steam weighs 0.207 pounds per cubic foot, or that this figure is its density in pounds. If a boiler is steadily generating and delivering to an engine steam possessing exactly these qualities and the water under the steam be violently disturbed, its liquid particles may mingle with the gaseous particles of the steam, and a pound of the mixture formed will no longer possess the same latent heat or density, yet the *pressure and temperature will still be the same as that of the exactly saturated steam.* Such steam is practically known as "wet" steam, and in contradistinction the term "dry steam" has arisen, the latter meaning simply exactly saturated steam. If a sufficient portion of the heating surface of the boiler above the water-line be exposed to the action of the fire, the pressure of the steam may remain the same, and yet its temperature may be greater, the latent heat greater, and the density less than corresponds to saturated steam. Such steam is practically known as superheated steam.

In measuring the performance of a boiler, the essential determination is the quantity of heat utilized by the generation of steam. If the steam generated at say 90 pounds pressure is dry steam, then for each pound of feed water the boiler is to be credited with utilizing 120 heat units, due to the temperature of the steam if the feed water is at 200° Fahr., and 808 heat units due to its latent heat, or a total of 928 heat units. If, however, 10 per cent. of the steam is liquid water mechanically mixed with 90 per cent. of dry steam, then for each pound of feed water the boiler is to be credited with 1.10×120 heat units, due to temperature, and 0.90×808 heat units, due to latent heat, or a total of 859 heat units, which is 92 per cent. of the dry steam total. Unless, therefore, allowance for the presence of moisture is made, the efficiency of a boiler is made too great for ordinary steam pressures, at the rate of $\frac{8}{10}$ per cent. for each one per cent. of water in the steam. Again, if steam at 90 pounds pressure is superheated 10° Fahrenheit, so that its temperature is 330° F., then for each pound of feed water at 200° F. we must credit the boiler with the heat due to dry steam plus $0.48 \times 10° = 4.8$ heat units, so that failure to allow for superheating makes the efficiency of a boiler, at ordinary pressures, too low by about 0.05 per cent. for each degree Fahrenheit of superheating.

It is customary among experts to make these allowances in reporting the performances of boilers, and hence arises the necessity of determining to what extent the steam generated by a given boiler differs from exactly dry steam.

If the steam is superheated, the simple observance of its temperature by a proper thermometer affords the desired data. If, however, the steam is shown by a thermometer to be at exactly the temperature due to saturation, it may contain any amount of water in suspension, and the determination of the amount of the latter can in general only be accurately known by a measurement of either the latent heat or density of a known weight of the mixture, the determination of the density is an operation too delicate to have been yet attempted with portable apparatus. The determination of latent heat involves simply the condensation or mixture of a known weight of steam in or with a known weight of some other substance of known specific heat, and the operations to be performed are such as can be carried out with apparatus of a conveniently portable nature. Nevertheless attempts to use portable apparatus or calorimeters for the determination of the latent heat of steam have, in the main, been very unsatisfactory, and opinions are divided among experts whether it is best to seek other methods than that of the condensing calorimeter or to attribute the latter's unsatisfactory results to unskillful use.

The object of the following investigations is to contribute material to both sides of this question.

1st. By proposing a method, based upon experiment, of recognizing dry, slightly wet, or slightly superheated steam by the scrutiny of a jet of steam flowing into the atmosphere.

2d. By a theoretical discussion of the instrumental errors to which condensing calorimeters are liable.

PART I.

EXPERIMENTS WITH STEAM JETS.

If a boiler can be made to generate steam which is a few degrees superheated, then by drawing off steam at the end of a pipe of sufficient length the loss of heat by the pipe may be made to so nearly equal the amount of the superheating that the steam will issue from the pipe in exactly the saturated condition. In the case of these experiments, this method was adopted to obtain dry steam.

A 30 HP. Harrison steam boiler, Fig. 59, was used, which, when not forced to its utmost steaming capacity, superheated its steam from six to twelve degrees Fahrenheit. To the top of the steam

space of this boiler an inch pipe, *a*, *a*, *a*, about 40 inches long was attached as shown in the figure. This pipe, led to an inch and a quarter tee *b*, to which were connected the several outlets used and the thermometer and steam gauge *A*. At *B* was a stop valve, and at *C* another thermometer and steam gauge. All of the pipe *a*, *a*, up to the tee was heavily protected against loss of heat by asbestos paper, two inches of hair felt, and canvas. When the thermometer *C* showed 8 degrees of superheating, the loss of heat from the pipe would make thermometer *A* show two degrees of superheating, both steam gauges *A* and *C* showing exactly the same pressure. Thermometer *B* was graduated to degrees, a space of $\frac{1}{16}$th of one inch being devoted to one degree. Thermometer *C* was equally coarse in its scale but the graduations were at intervals of two degrees. The steam gauges were graduated to pounds.

By raising the water in the boiler to the top of the gauge glass and increasing the quantity of steam generated by the boiler, the superheating at thermometer *A* could be made to vary from 2° Fahr. to zero, *and the steam referred to herein as dry steam was such steam as flowed through the pipe a a when Thermometer A showed less than two but more than zero degrees of superheating, with reference to the pressure common to the gauges at A and C respectively.*

Experiment 1.—The tee *b* was fitted at its under side with a draining pipe terminating in a petcock. Into its end one side were screwed $\frac{3}{8}$-inch pipe plugs prepared as follows (see Fig. 60). The square hub to which a wrench is intended to apply was turned off, and a hole $\frac{3}{16}$ of an inch in diameter drilled through the center of the plug. A hole $\frac{7}{16}$ of an inch in diameter was then drilled in the inside end of the plug, so as to leave a thickness of metal at the outer end of one-sixteenth of an inch. The $\frac{3}{16}$ inch hole is then practically an orifice in a "thin plate," and removes the possibility of any of the heat of steam flowing through it, being employed in overcoming friction against the passages leading to the point where the steam issues into the atmosphere.

Thus arranged, dry steam, at 55 pounds gauge pressure, flows into the atmosphere of a boiler room in a jet which is perfectly transparent over about one-half an inch of distance from the orifice, as shown by Fig. 61. Fig. 62 shows similar jets for 95 pounds gauge pressure.

Experiment 2.—For the thin orifice in the end of tee *b* there was substituted a piece of $\frac{1}{8}$-inch gas pipe *d*, Fig. 59, about four

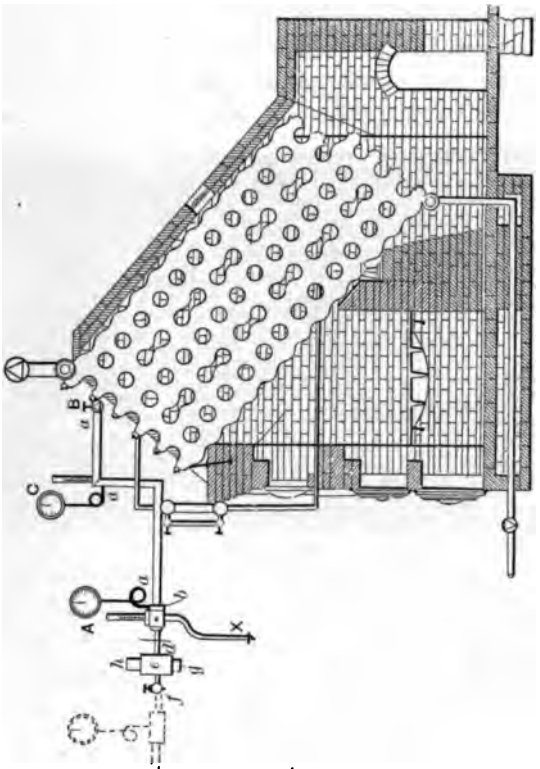

Fig. 59

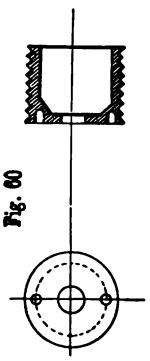

Fig. 60

inches long, upon which was mounted a hollow copper drum *e*, about three inches diameter, and $\frac{3}{8}$ of an inch in length. On the outer end of the gas pipe was a brass cock, *f*, two inches long. The bore of the pipe and cock was about $\frac{3}{16}$ of an inch. The

FIG. 61.—Dry Steam at 55 Pounds Gauge Pressure.

drum *e* was fitted to receive a stream of water at *g* and allow it to flow off at *h* after subjecting the pipe *d* to a certain refrigerating effect. Thermometers at *g* and *h* graduated to fifths of a degree Fahr. determined the temperature of the water at its entrance and

FIG. 62.—Dry Steam at 95 Pounds Pressure.

exit to the condenser. When no water was flowing, the appearance of jets for "dry steam" at 55 pounds' pressure was as per Fig. 63. The thin orifice at the side of the tee shows the transparency of the "dry steam" for half an inch from the orifice, as per

Fig. 61. The jet issuing from the cock, *f*, is a bluish white color clear up to the orifice, due to the cooling loss of heat in passing through the six inches of $\frac{1}{8}$-inch pipe and cock.

Upon passing water through the condenser so as to maintain it at an average temperature of $74\frac{1}{2}°$ Fahr. the end jet became distinctly white, as per Fig. 64; the jet at the side certifying by its unchanged appearance that the steam operated upon was the same as for Fig. 61.

FIG. 63.—Dry Steam at 55 Pounds Pressure.—No Water in Cooler.

The heat abstracted per minute was determined to be 12.75 British thermal units. The steam flowing* per minute was determined to be 1.13 pounds. The latent heat of steam at 55 pounds gauge pressure being 822 British thermal units, 1.13 pounds of steam would possess 929 units of latent heat, which if completely absorbed by refrigeration would cause the 1.13 pounds of steam to become liquid water at the temperature corresponding

* This was determined by attaching Cock *f* to a Wheeler surface condenser, *S*, see Fig. 59, and determining the flow for a period of about half an hour, and weighing the condensed steam by a spring balance *k*. A sample record is the following:

Time.	Flow per minute, lbs.	oz.
9.02 P. M.	—	—
9.03 "	1	$2\frac{1}{4}$
9.05 "	1	4
9.06 "	1	3
9.07 "	1	$1\frac{1}{4}$
9.08 "	1	3
9.09 "	1	3
9.10 "	1	$1\frac{1}{4}$
9.11 "	1	1
9.12 "	1	2

Time.	Flow per minute, lbs.	oz.
9.14 P. M.	1	$2\frac{1}{4}$
9.15—16 9.17 "	1	$2\frac{1}{4}$
9.18 "	1	2
9.19 "	1	$1\frac{1}{4}$
9.20 "	1	2
9.21 "	1	$3\frac{1}{4}$
9.22 "	1	2
9.23 "	1	1
9.24 "	1	$1\frac{1}{4}$
9.25 "	1	$3\frac{1}{4}$

to 55 pounds pressure. Hence the absorption by the circulating water of the 12.75 British thermal units may be assumed to cause $\frac{12.75}{929} \times 100 = 1.4$ per cent. of the steam to liquefy. In other words Fig. 64 exhibits the appearance of a jet of steam at 55 pounds pressure containing 1.4 per cent. of liquid water.

Fig. 65 shows the effect of circulating iced water through the cooling drum, thereby maintaining it at an average temperature of 54° Fahr. The heat abstracted per minute was 18 British thermal units, the flow of steam was practically the same, so that the view

FIG. 64.—Steam at 55 Pounds Pressure Containing 1.4 per cent. Moisture.

exhibits the appearance of a jet of steam at 55 pounds pressure containing 1.94 per cent. of liquid water.

A jet at 95 pounds gauge pressure being maintained at 76° Fahr., 26.27 thermal units were abstracted from it per minute, and the flow of steam was 1.75 pounds per minute. Fig. 66 exhibits the appearance of this jet, which by the above data contains 1.88 per cent. of water. Fig. 67 shows the same jet with no circulation of water through the cooling drum. It is slightly whiter than the similar jet of 55 pounds pressure, owing to the greater weight of steam flowing per unit of time. A similar difference is noticeable between Figs. 74, 69 and 66.

Fig. 68 shows a jet made by throttling steam at 95 pounds by

means of the valve at *B*, Fig. 59, so as to make the gauges *C* and *A* stand at 53 pounds. Thermometer *C* read 315° and *A*

FIG. 65.—Steam at 55 Pounds Pressure Containing 1.94 per cent. Water.

309°. The temperature corresponding to 53 pounds is 300°. Hence the steam issuing into the atmosphere is 9° superheated.

FIG. 66.—Steam at 95 Pounds Pressure Containing 1.88 per cent. Water.

inches long, upon which was mounted a hollow copper drum *e*, about three inches diameter, and $\frac{3}{8}$ of an inch in length. On the outer end of the gas pipe was a brass cock, *f*, two inches long. The bore of the pipe and cock was about $\frac{3}{16}$ of an inch. The

FIG. 61.—Dry Steam at 55 Pounds Gauge Pressure.

drum *e* was fitted to receive a stream of water at *g* and allow it to flow off at *h* after subjecting the pipe *d* to a certain refrigerating effect. Thermometers at *g* and *h* graduated to fifths of a degree Fahr. determined the temperature of the water at its entrance and

FIG. 62.—Dry Steam at 95 Pounds Pressure.

exit to the condenser. When no water was flowing, the appearance of jets for "dry steam" at 55 pounds' pressure was as per Fig. 63. The thin orifice at the side of the tee shows the transparency of the "dry steam" for half an inch from the orifice, as per

EXPERIMENT 3.—Jets of dry steam at 55 pounds being uniformly flowing and showing as per Fig. 63, the level of the water in the boiler was gradually raised beyond the top of the water glass until the water was about 8 inches from the top of the steam space of the boiler, when periodical gusts of white mist commenced to occur in both the end and side jets, and engines taking steam from the boiler received so much water in their cylinders that they could no longer run with safety. A view of one of such gusts was made by magnesium flash light with the result shown in Fig. 69. While the feed pump was working, the priming denoted by these gusts

FIG. 69.—Steam at 55 Pounds.—Boiler Priming Violently.

continued. The jet returned to steady action and normal appearance within a few seconds after the feed pump was stopped, notwithstanding that the boiler was almost completely full of water.

EXPERIMENT 4.—The boiler being steadily making steam 8° superheated and supplying the same to an engine through about 100 feet of 2½-inch pipe, newly felted with one inch thickness of hair felt, a jet of steam was made to blow through a petcock about two feet above the throttle valve on the steam chest of the engine. Fig. 70 shows the appearance of the steam when the engine was running with a total steam consumption of about 600 pounds of steam per hour.

Fig. 71 shows the same jet when the engine stopped and no

to 55 pounds pressure. Hence the absorption by the circulating water of the 12.75 British thermal units may be assumed to cause $\frac{12.75}{929} \times 100 = 1.4$ per cent. of the steam to liquefy. In other words Fig. 64 exhibits the appearance of a jet of steam at 55 pounds pressure containing 1.4 per cent. of liquid water.

Fig. 65 shows the effect of circulating iced water through the cooling drum, thereby maintaining it at an average temperature of 54° Fahr. The heat abstracted per minute was 18 British thermal units, the flow of steam was practically the same, so that the view

FIG. 64.—Steam at 55 Pounds Pressure Containing 1.4 per cent. Moisture.

exhibits the appearance of a jet of steam at 55 pounds pressure containing 1.94 per cent. of liquid water.

A jet at 95 pounds gauge pressure being maintained at 76° Fahr., 26.27 thermal units were abstracted from it per minute, and the flow of steam was 1.75 pounds per minute. Fig. 66 exhibits the appearance of this jet, which by the above data contains 1.88 per cent. of water. Fig. 67 shows the same jet with no circulation of water through the cooling drum. It is slightly whiter than the similar jet of 55 pounds pressure, owing to the greater weight of steam flowing per unit of time. A similar difference is noticeable between Figs. 74, 69 and 66.

Fig. 68 shows a jet made by throttling steam at 95 pounds by

means of the valve at *B*, Fig. 59, so as to make the gauges *C* and *A* stand at 53 pounds. Thermometer *C* read 315° and *A*

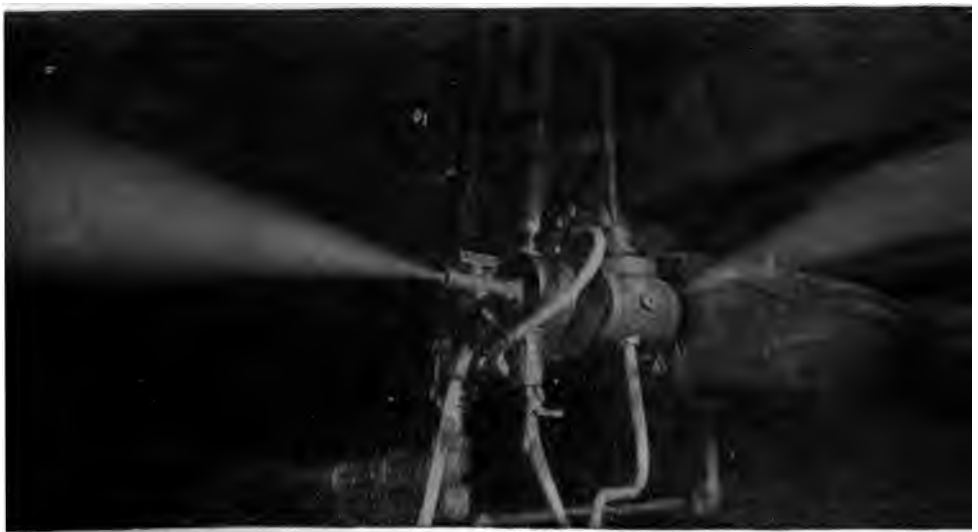

FIG. 65.—Steam at 55 Pounds Pressure Containing 1.94 per cent. Water.

309°. The temperature corresponding to 53 pounds is 300°. Hence the steam issuing into the atmosphere is 9° superheated.

FIG. 66.—Steam at 95 Pounds Pressure Containing 1.88 per cent. Water.

FIG. 67.—Steam at 95 Pounds Pressure.—No Water in Condenser.

The end jet was transparent for a distance of 2½ inches and the side jet for 3 inches. The photograph shows this effect very clearly. The amount of steam flowing per minute was sensibly the same as in the case of dry steam at 55 pounds pressure.

—Steam at 95 Pounds Pressure, Throttled to 53 Pounds, Superheating 9 Degrees.—No Water in Co

EXPERIMENT 3.—Jets of dry steam at 55 pounds being uniformly flowing and showing as per Fig. 63, the level of the water in the boiler was gradually raised beyond the top of the water glass until the water was about 8 inches from the top of the steam space of the boiler, when periodical gusts of white mist commenced to occur in both the end and side jets, and engines taking steam from the boiler received so much water in their cylinders that they could no longer run with safety. A view of one of such gusts was made by magnesium flash light with the result shown in Fig. 69. While the feed pump was working, the priming denoted by these gusts

FIG. 69.—Steam at 55 Pounds.—Boiler Priming Violently.

continued. The jet returned to steady action and normal appearance within a few seconds after the feed pump was stopped, notwithstanding that the boiler was almost completely full of water.

EXPERIMENT 4.—The boiler being steadily making steam 8° superheated and supplying the same to an engine through about 100 feet of 2½-inch pipe, newly felted with one inch thickness of hair felt, a jet of steam was made to blow through a petcock about two feet above the throttle valve on the steam chest of the engine. Fig. 70 shows the appearance of the steam when the engine was running with a total steam consumption of about 600 pounds of steam per hour.

Fig. 71 shows the same jet when the engine stopped and no

steam was passing through the steam pipe. Jet 70 was so laden with water that it flowed with irregular gusts, resembling those occurring when the boiler was priming (Fig. 69), but of less violent character. And yet the boiler was making slightly superheated

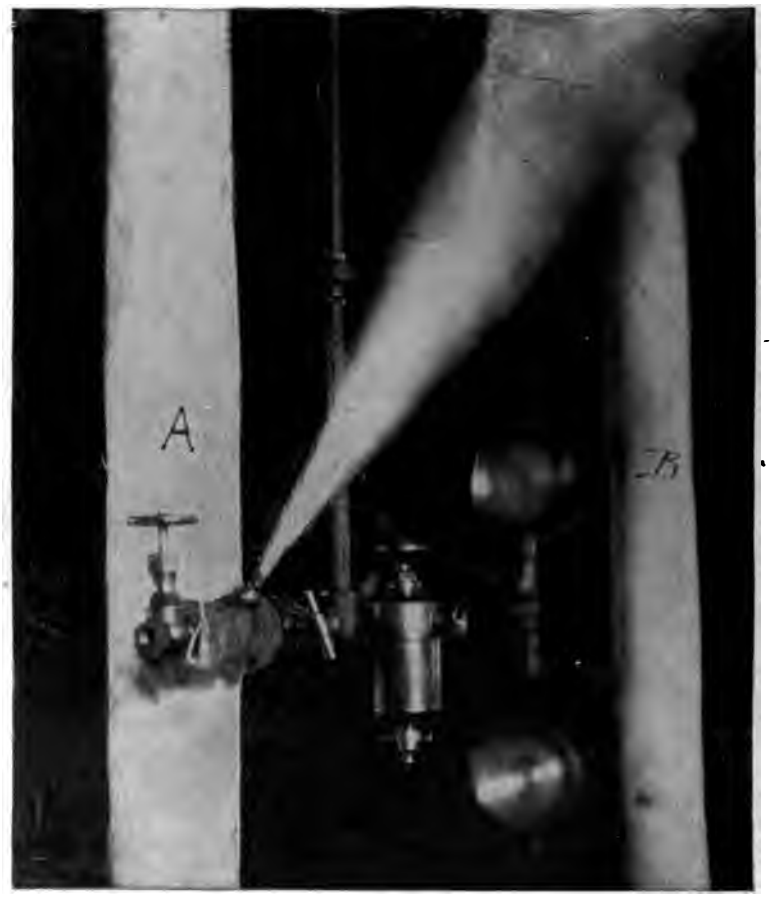

FIG. 70.—Dry Steam after Traversing 100 Feet of Covered Pipe at Velocity of 50 Feet Per Second.

steam, as proven both by the thermometer at *C* (Fig. 59) and the transparent appearance of the jets from the apparatus at the boiler. The explanation of this paradox is as follows: The steam pipe to the engine runs beneath the engine foundation from the boiler to a point below the vertical pipe, *B* (Fig. 70); thence it rises in *B*, and finally runs vertically downward to the engine in *A*.

When the engine is stopped, the water condensed by the pipe remains at the bottom of *B*, and the jet contains only a gray mist, as per Fig. 71. When the engine is running, the water of condensation is swept along with the steam with sufficient power to cause

FIG. 71.—Dry Steam after Traversing 100 Feet of Covered Pipe at Velocity of 5 Feet Per Second.

it to be carried up *B*, and show the wetness of Fig. 70. A valve placed at the lower end of *B* to drain the water out of the pipe will prevent the wet appearance of the jet in Fig. 70 when a feeble current is passing through *A* and *B*, but such drainage fails sensibly to alter the appearance in Fig. 70, when the velocity through the pipe is 50 feet per second.

inches long, upon which was mounted a hollow copper drum *e*, about three inches diameter, and $\frac{3}{8}$ of an inch in length. On the outer end of the gas pipe was a brass cock, *f*, two inches long. The bore of the pipe and cock was about $\frac{3}{16}$ of an inch. The

FIG. 61.—Dry Steam at 55 Pounds Gauge Pressure.

drum *e* was fitted to receive a stream of water at *g* and allow it to flow off at *h* after subjecting the pipe *d* to a certain refrigerating effect. Thermometers at *g* and *h* graduated to fifths of a degree Fahr. determined the temperature of the water at its entrance and

FIG. 62.—Dry Steam at 95 Pounds Pressure.

exit to the condenser. When no water was flowing, the appearance of jets for "dry steam" at 55 pounds' pressure was as per Fig. 63. The thin orifice at the side of the tee shows the transparency of the "dry steam" for half an inch from the orifice, as per

Fig. 61. The jet issuing from the cock, *f*, is a bluish white color clear up to the orifice, due to the cooling loss of heat in passing through the six inches of $\frac{1}{8}$-inch pipe and cock.

Upon passing water through the condenser so as to maintain it at an average temperature of $74\frac{1}{2}°$ Fahr. the end jet became distinctly white, as per Fig. 64; the jet at the side certifying by its unchanged appearance that the steam operated upon was the same as for Fig. 61.

FIG. 63.—Dry Steam at 55 Pounds Pressure.—No Water in Cooler.

The heat abstracted per minute was determined to be 12.75 British thermal units. The steam flowing* per minute was determined to be 1.13 pounds. The latent heat of steam at 55 pounds gauge pressure being 822 British thermal units, 1.13 pounds of steam would possess 929 units of latent heat, which if completely absorbed by refrigeration would cause the 1.13 pounds of steam to become liquid water at the temperature corresponding

* This was determined by attaching Cock *f* to a Wheeler surface condenser, *S*, see Fig. 59, and determining the flow for a period of about half an hour, and weighing the condensed steam by a spring balance *k*. A sample record is the following :

Time.	Flow per minute, lbs.	oz.	Time.	Flow per minute, lbs.	oz.
9.02 P. M.	—	—	9.14 P. M.	1	$2\frac{1}{4}$
9.03 "	1	$2\frac{1}{4}$	9.15—16 9.17 "	1	$2\frac{1}{4}$
9.05 "	1	4	9.18 "	1	2
9.06 "	1	3	9.19 "	1	$1\frac{1}{4}$
9.07 "	1	$1\frac{1}{4}$	9.20 "	1	2
9.08 "	1	3	9.21 "	1	$3\frac{1}{4}$
9.09 "	1	3	9.22 "	1	2
9.10 "	1	$1\frac{1}{4}$	9.23 "	1	1
9.11 "	1	1	9.24 "	1	$1\frac{1}{4}$
9.12 "	1	2	9.25 "	1	$3\frac{1}{4}$

The value of P is commonly known as the "*Percentage of Priming.*"

The equivalent of this formula has been written in several shapes by various writers. The above arrangement is thought to represent most directly the physical relations involved; thus, if the expression

$$W\,[(t_2 + c)\,s_2 - t_1 s_1] - w\,[H - (t_2 + s)\,s_2]$$

be represented by Q, then $\pm\,Q$ is the amount by which the heat belonging to the w pounds of steam condensed differs from the heat belonging to the same weight of steam, if it had been such steam as Regnault used in his experiments, which is the steam of standard "dryness."

If Q is plus, then the heat

$$W\,[(t_2 + c)\,s_2 - t_1 s_1]$$

imparted to the condensing water by the w pounds of tested steam is less than

$$w\,[H - (t_2 + c)\,s_2], \text{ or}$$

the heat which w pounds of Regnault's steam would be capable of imparting to the condensing water; hence, it is assumed that a weight of the tested steam must have contained liquid water.

If Q is minus, then the tested steam imparts more heat to the condensing water than would w pounds of "Regnault's" steam, and consequently the tested steam is assumed to be superheated a number of degrees equal to Q divided by the specific heat of steam at constant pressure, or

$$\text{degrees of superheating} = \frac{-Q}{0.480}.$$

Formula (1) then gives a value of P which is minus, and whi expresses the equivalent of the superheating in percentage un which, if taken against the latent heat of a pound of Regnau steam expressed in thermal units, gives the amount by which tested steam was superheated above the temperature of Regna steam. Thus, if t_4 represent the temperature to which stea superheated, then

$$t_4 - t_3 = \frac{-P\,(H - h)}{0.480} = \frac{-Q}{0.480}.$$

II. *Formulæ for Errors.*

[illegible]

vation, then the estimated value of P will be incorrect by an amount ΔP.

Let it be required to determine how much of ΔP is due respectively to W, ω, $(t_2 + c)\, s_2$, $t_1 s_1$, H and h.

We will represent by ΔP_W, ΔP_ω, $\Delta P t_2$, $\Delta P t_1$, ΔP_H and ΔP_h the errors due directly to W, ω, $(t_2 + c)\, s_2$, etc., respectively, so that it will follow that

$$\Delta P = \Delta P_W + \Delta P^\omega + \Delta P t_2 + \Delta P t_2 + \Delta P_H + \Delta P_h \quad . \quad . \quad (3)$$

Let the possible error of W be ΔW pounds
" " " ω " $\Delta\omega$ "
" " " $(t_2 + c)\, s_2$ " Δt_2 degrees
" " " t_1 " Δt_1 "
" " " H " ΔH heat units
" " " h " Δh " .

If in (1) we add to each quantity its error we shall have:

$$P + \Delta P = 100 \left\{ \frac{(\omega + \Delta\omega)[H + \Delta H - (t_2 + c)\, s_2 - \Delta t_2] - (W + \Delta W)[(t_2 + c)\, s_2 + \Delta t_2 - (t_1 s_1 \times \Delta t_1)]}{(\omega + \Delta\omega)\ [H + \Delta H - (h + \Delta h)]} \right\} \quad (4)$$

Subtracting Equation (1) from this, member by member, we have:

$$\Delta P = 100 \left\{ \frac{H + \Delta H - (t_2 + c)\, s_2 - \Delta t_2}{H + \Delta H - (h + \Delta h)} - \frac{H - (t_2 + c)\, s_2}{H - h} - \frac{(W + \Delta W)\, [t_2 + c)\, s_2 + \Delta t_2 - t_1 s_1 + \Delta t_1}{(\omega + \Delta\omega)\ [H + \Delta H - (h + \Delta h)]} + \frac{W[(t_2 + c)\, s_2 - t_1 s_1]}{\omega\, (H - h)} \right\} \quad (5)$$

Reducing to the common denominator:

$$\omega\, (\omega + \Delta\omega)\, [H + \Delta H - (h + \Delta h)]$$

We have ΔP equal to the algebraic sum of the following quantities, which are each to be understood as having the above common denominator. The constant 100 is also omitted:

$$- W\, [(t_2 + c)\, s_2 - t_1 s_1]\, \omega\, (H - h) \quad . \quad . \quad . \quad . \quad . \quad (a)$$
$$- \Delta W\, [(t_2 + c)\, s_2 - t_1 s_1]\, \omega\, (H - h) \quad . \quad . \quad . \quad . \quad . \quad (b)$$
$$- W\omega\, (H - h)\, (\Delta t_2) \quad . \quad . \quad . \quad . \quad . \quad . \quad . \quad . \quad . \quad . \quad (c)$$
$$+ W\omega\, (H - h)\, (\Delta t_1) \quad . \quad . \quad . \quad . \quad . \quad . \quad . \quad . \quad . \quad . \quad (d)$$
$$- \Delta W\omega\, (H - h)\, (\Delta t_2 - \Delta t_1) \quad . \quad . \quad . \quad . \quad . \quad . \quad . \quad . \quad (e)$$

$$+ W\omega (H - h) [(t_2 + c) s_2 - t_1 s_1] \quad . \quad . \quad . \quad . \quad . \quad . \quad (f)$$
$$+ W \Delta\omega (H - h) [(t_2 + c) s_2 - t_1 s_1] \quad . \quad . \quad . \quad . \quad . \quad (g)$$
$$+ W \Delta\omega (\Delta H) [(t_2 + c) s_2 - t_1 s_1] \quad . \quad . \quad . \quad . \quad . \quad . \quad (h)$$
$$- W \Delta\omega (\Delta h) [t_2 + c) s_2 - t_1 s_1] \quad . \quad . \quad . \quad . \quad . \quad . \quad (h')$$
$$+ W + \omega \times \Delta H \times [(t_2 + c) s_2 - t_1 s_1] \quad . \quad . \quad . \quad . \quad (i)$$
$$- W \times \omega + \Delta h \times [(t_2\ c) s_2 - t_1 s_1] \quad . \quad . \quad . \quad . \quad . \quad (j)$$
$$+ \omega^2 (H - h) [H - (t_2 + c) s_2] \quad . \quad . \quad . \quad . \quad . \quad . \quad (k)$$
$$+ \omega (H - h) [H - (t_2 + c) s_2] \quad . \quad . \quad . \quad . \quad . \quad . \quad . \quad (l)$$
$$+ \omega^2 \Delta\omega (H - h) (\Delta H) \quad . \quad . \quad . \quad . \quad . \quad . \quad . \quad . \quad . \quad (m)$$
$$+ \omega \Delta\omega (H - h) (\Delta h) \quad . \quad . \quad . \quad . \quad . \quad . \quad . \quad . \quad . \quad (n)$$
$$- \omega \Delta\omega (H - h) (\Delta t_2) \quad . \quad . \quad . \quad . \quad . \quad . \quad . \quad . \quad . \quad (n')$$
$$- \omega^2 (H - h) (\Delta t_2) \quad . \quad . \quad . \quad . \quad . \quad . \quad . \quad . \quad . \quad . \quad (o)$$
$$- \omega \Delta\omega [H - (t_2 + c) s_2] (H - h) \quad . \quad . \quad . \quad . \quad . \quad (p)$$
$$- \omega^2 (H - h) [H - (t_2 - c) s_2] \quad . \quad . \quad . \quad . \quad . \quad . \quad (q)$$
$$- \omega^2 [H - (t_2 + c) s_2] (\Delta H) \quad . \quad . \quad . \quad . \quad . \quad . \quad . \quad (r)$$
$$- \omega \Delta\omega [H - (t_2 + c) s_2] \Delta H) \quad . \quad . \quad . \quad . \quad . \quad . \quad (s)$$
$$+ \omega^2 [H - (t_2 + c) s_2] (\Delta h) \quad . \quad . \quad . \quad . \quad . \quad . \quad . \quad (t)$$
$$+ \omega \Delta\omega [H - (t_2 + c) s_2) (\Delta h) \quad . \quad . \quad . \quad . \quad . \quad . \quad (u)$$

We now have (a) canceling with (f)
(k) " " (g)
(l) " " (p) also

$$+\Delta\omega \left\{ \frac{\frac{W}{\omega}[(t_2+c)\ s_2 - t_1\ s_1]}{(\omega+\Delta\omega)\ [H+\Delta H-(h+\Delta h)]} \right\} 100 = \Delta P \quad . \quad . \quad (6)$$

from (c), (o) and (n')

$$-\Delta t_2 \left\{ \frac{W}{(\omega+\Delta\omega)\ [H+\Delta H-(h+\Delta h)]} + \frac{1}{H+\Delta H-(h+\Delta h)} \right\} 100$$
$$= \Delta P_{t2} \quad . \quad . \quad . \quad . \quad . \quad (7)$$

from (d)

$$+\Delta t_1 \left\{ \frac{W}{(\omega-\Delta\omega)\ [H+\Delta H-(h+\Delta h)]} \right\} 100 = \Delta P_{t1} \quad . \quad . \quad . \quad (8)$$

from (b) and (e)

$$-\Delta W \left\{ \frac{(t_2+c)s_2 - t_1 s_1 - \Delta t_2 + \Delta t_1}{(\omega+\Delta\omega)[H+\Delta H-(h+\Delta h)]} \right\} 100 = \Delta P_w \quad . \quad . \quad . \quad (9)$$

EXPERIMENT 3.—Jets of dry steam at 55 pounds being uniformly flowing and showing as per Fig. 63, the level of the water in the boiler was gradually raised beyond the top of the water glass until the water was about 8 inches from the top of the steam space of the boiler, when periodical gusts of white mist commenced to occur in both the end and side jets, and engines taking steam from the boiler received so much water in their cylinders that they could no longer run with safety. A view of one of such gusts was made by magnesium flash light with the result shown in Fig. 69. While the feed pump was working, the priming denoted by these gusts

FIG. 69.—Steam at 55 Pounds.—Boiler Priming Violently.

continued. The jet returned to steady action and normal appearance within a few seconds after the feed pump was stopped, notwithstanding that the boiler was almost completely full of water.

EXPERIMENT 4.—The boiler being steadily making steam 8° superheated and supplying the same to an engine through about 100 feet of 2½-inch pipe, newly felted with one inch thickness of hair felt, a jet of steam was made to blow through a petcock about two feet above the throttle valve on the steam chest of the engine. Fig. 70 shows the appearance of the steam when the engine was running with a total steam consumption of about 600 pounds of steam per hour.

Fig. 71 shows the same jet when the engine stopped and no

To discuss the relative importance of these partial errors we must know something of the relative magnitude of the several variables. The latter are controlled by the equation

$$\frac{W}{\omega}\left[(t_2 + c)\, s_2 - t_1 s_1\right] = H - (t_2 + c)\, s_2 \pm Q. \qquad (13)$$

Throughout the range of steam tables covering pressures from atmosphere to 210 pounds per square inch, H varies only from 1178 to 1230 thermal units. The maximum value of Q may be taken at 200 thermal units equivalent to 25% of priming, or about 400° Fahrenheit superheating; t_1 is limited to temperatures not lower than 40°, as water at 32° quickly becomes 40° in being handled in a boiler room, $t_2 + c$ should not be greater than 125°, as the losses by evaporation above this temperature are too great to be properly controlled.

If we assume $(t_2 + c)\, s_2$ to exceed $t_1 s_1$ by 5°, 10°, 30°, 60° and 85° respectively, we shall have, by (13), the possible values of $\frac{W}{\omega}$ as follows in round numbers:

TABLE I.

SHOWING POSSIBLE VALUES OF $\frac{W}{\omega}$ FOR INITIAL TEMPERATURE 40° FAHRENHEIT.

Condition of Steam.	VALUES OF $\frac{W}{\omega}$				
	$(t_2+c)\, s_2 = 45°$	$(t_2+c)\, s_2 = 50°$	$(t_2+c)\, s_2 = 70°$	$(t_2+c)\, s_2 = 100°$	$(t_2+c)\, s_2 = 125°$
Superheating 200 B. T. U.	279	138	46	23	16
210 lbs.	239	118	39	19	13
14.7 lbs.	227	113	37	18	12
Priming 200 B.T.U	186	93	30	15	10

For any value of $\frac{W}{\omega}$ in Table I. we may have an infinite number of values for either W or ω by assigning a value to W and determining ω to correspond.

Hence for any given steam pressure or state of superheating or priming, as for example for dry steam at 210 pounds pressure, we may have a range of values of W and ω like that in the following table:

When the engine is stopped, the water condensed by the pipe remains at the bottom of *B*, and the jet contains only a gray mist, as per Fig. 71. When the engine is running, the water of condensation is swept along with the steam with sufficient power to cause

FIG. 71.—Dry Steam after Traversing 100 Feet of Covered Pipe at Velocity of 5 Feet Per Second.

it to be carried up *B*, and show the wetness of Fig. 70. A valve placed at the lower end of *B* to drain the water out of the pipe will prevent the wet appearance of the jet in Fig. 70 when a feeble current is passing through *A* and *B*, but such drainage fails sensibly to alter the appearance in Fig. 70, when the velocity through the pipe is 50 feet per second.

TABLE III.

SHOWING VALUES OF PARTIAL ERRORS FOR CASE OF DRY STEAM AT 210 LBS. PRESSURE.

Partial Errors.	$\frac{W}{\omega} = 239$; $(t_2 + c)\, s_2 - t_1 s_1 = 5°$					
	$W = 300$ $\omega = 1.26$	$W = 200$ $\omega = 0.84$	$W = 100$ $\omega = 0.42$	$W = 50$ $\omega = 0.21$	$W = 10$ $\omega = 0.04$	$W = 5$ $\omega = 0.02$
	per cent.	per cent.	per cent.	per cent.	per cent.	per cent.
ΔP_ω	+ 6.68	9.75	18.13	31.74	82.04	98.70
ΔP_{t1}	+ 2.71	2.62	2.47	2.16	1.63	10.79
ΔP_p	+ 0.24	2.40	0.24	0 24	0.24	0.24
ΔP_{t2}	− 5.43	− 5.25	− 4.94	− 4.33	− 3.27	− 1.60
ΔP_W	− 0.03	− 0.04	− 0.08	− 0.14	− 0.34	− 0.42
Sum of + errors	9.63	12.61	20.84	34.14	83.91	99.73
Sum of − errors	− 5.46	− 5.29	− 5.02	− 4.47	− 3.61	− 2.02
ΔP = total errors	+ 4.17	+ 7.32	15.82	29.67	80.30	97.71

TABLE IV.

SHOWING PARTIAL ERRORS FOR DRY STEAM AT 210 LBS. PRESSURE.

	$\frac{W}{\omega} = 13$; $(t_2 + c)\, s_2 - t_1 s_1 = 85°$ Fahr.					
Values of W = Values of ω =	300 23.1	200 15.4	100 7.7	50 3.8	10 0.76	5 0.38
	per cent.	per cent.	per cent.	per cent.	per cent.	per cent.
ΔP_ω	0.35	0.53	1.06	2.14	9.97	18.41
ΔP_{t1}	0.15	0.15	0.15	0.15	0.14	0.13
ΔP_p	0.24	0.24	0.24	0.24	0.24	0.24
ΔP_{t2}	− 0.32	− 0.32	− 0.32	− 0.31	− 0.29	− 0.27
ΔP_W	− 0.02	− 0.04	− 0.13	− 0.16	− 0.75	− 1.50
Sum of + errors	0.63	0.92	1.45	2.53	10.39	18.78
Sum of − errors	− 0.34	− 0.36	− 0.45	− 0.47	− 1.04	1.77
ΔP or total errors	0.29	0.56	1.00	2.06	9.31	17.01

For other conditions of pressure, superheating or priming, such as are covered in Table I., the figures for ΔP_p would increase or decrease by about 0.07 units and those for $\Delta P\omega$ by about 25 per cent. of their own value. The other partial errors would not sensibly alter.

s_1 = the mean specific heat of water between t_1 and zero, Fahrenheit.

t_2 = the temperature of W after the condensation of w.

s_2* = the mean specific heat of water between t_2 and zero, Fahrenheit.

c = correction in degrees Fahrenheit to be added to t_2 to compensate for the losses due to radiation, conduction and evaporation from the calorimeter during the interval of an experiment.

t_3 = the temperature, Fahrenheit, at which water boils under the pressure at which the steam w is produced.

s_3 = the mean specific heat of water between t_3 and zero, Fahrenheit.

H = the heat in British thermal units reckoned from zero, Fahrenheit, which should be realized from the condensation of each pound of w, if the latter is perfectly dry or saturated steam, such as steam tables based on Regnault's researches represent. That is,

$$H = 1092.7 + 0.305\,(t_3 - 32) + 32.$$

h = the heat in British thermal units, reckoned from zero, Fahrenheit, which should be realized by the cooling of each pound of w, if the latter is entirely liquid water at the temperature t_3. That is,

$$h = t_3 s_3.$$

P = the percentage of w, which is liquid water or the per cent. of its weight, which by condensation will afford only h thermal units per pound. Then the thermal units which will be contained in the calorimeter after the entrance of the w pounds of steam are,

$$\frac{P}{100} \times w \times h + \left(w - \frac{P}{100} \times w\right) H + W \times t_1 \times s_1.$$

But by the observation of t_2 and determinations of c we have, the heat present in the calorimeter after condensation also equals

$$(w + W) \times (t_2 + c)\, s_2;$$

whence,

$$\frac{P \times w \times h}{100} + \left(w - \frac{P \times w}{100}\right) H + W t_1 s_1 = (W + w)\,(t_2 + c)\, s_2;$$

or,

$$P = 100 \left\{ \frac{-W\,[(t_2 + c)\, s_2 - t_1 s_1] + w\,[H - (t_2 + c)\, s_2]}{w\,(H - h)} \right\} \qquad (1)$$

* See Rankine's *Steam Engine*, Art. 209.

inconsistent with the scale of accuracy upon which the weights of such amounts would be determined. The constant error of $\frac{1}{16}$th pound which has been used for both $\Delta\omega$ and ΔW is consistent with the practice of using platform scales for the determination of ω combined with W. But when ω is determined separately, it is proper to assume that its value will be determined with weighing apparatus whose limit of accuracy will be proportional to the weight to be measured.

It is therefore more consistent with probable accuracy to make $\Delta\omega = C \times \omega$, C being a constant fraction, and to assign variable values to ΔW, as the value of W is different. We shall then have in formula (6):

$$\frac{\Delta\omega}{\omega \times \Delta\omega} = \frac{C}{1 + C}$$

and ΔP_ω will vary only as the term

$$\frac{W}{\omega} \frac{(t_2 + c)\, s - t_1 s_1}{1\, t + \Delta H - (h + \Delta h)} \text{ varies.}$$

If therefore we determine the ratio of $\frac{\Delta\omega}{\omega + \Delta\omega}$ in any column of Tables III. or IV. which shows a satisfactory low value of ΔP_ω, we may find from this ratio a value for C, and thence for $\Delta\omega$, which will make the value of ΔP_ω constant throughout either of these Tables.

Thus in Table IV. for $\omega = 23.1$ pounds and $\Delta\omega = \frac{1}{16}$ we have

$$\frac{\Delta\omega}{\omega + \Delta\omega} = \frac{1}{16\,(23.1 + 1)} = \frac{1}{16 \times 24.1} = \frac{1}{385} = \frac{C}{1 + C},$$

whence $C = \frac{1}{4}$ per cent., and this gives $\Delta P_\omega = 0.35$ per cent.

For $\Delta\omega = \frac{1}{4}$ per cent. all the values of ΔP_ω in Table IV. will be 0.35 per cent. and all those in Table III. will be $0.35 \times \frac{1185}{1105} = 0.38$.

Assign to ΔW a value equal to the greatest sensitiveness with which 200 pounds can be weighed on a special steelyard, viz., $\frac{1}{100}$th pound, and we shall have the values of ΔP_ω in Tables III. and IV. reduced about six times. Table III. deals with too small values of ω for use in a practical calorimeter. Table IV., rearranged on the above basis, gives

s_1 = the mean specific heat of water between t_1 and zero, Fahrenheit.

t_2 = the temperature of W after the condensation of w.

s_2* = the mean specific heat of water between t_2 and zero, Fahrenheit.

c = correction in degrees Fahrenheit to be added to t_2 to compensate for the losses due to radiation, conduction and evaporation from the calorimeter during the interval of an experiment.

t_3 = the temperature, Fahrenheit, at which water boils under the pressure at which the steam w is produced.

s_3 = the mean specific heat of water between t_3 and zero, Fahrenheit.

H = the heat in British thermal units reckoned from zero, Fahrenheit, which should be realized from the condensation of each pound of w, if the latter is perfectly dry or saturated steam, such as steam tables based on Regnault's researches represent. That is,

$$H = 1092.7 + 0.305\,(t_3 - 32) + 32.$$

h = the heat in British thermal units, reckoned from zero, Fahrenheit, which should be realized by the cooling of each pound of w, if the latter is entirely liquid water at the temperature t_3. That is,

$$h = t_3 s_3.$$

P = the percentage of w, which is liquid water or the per cent. of its weight, which by condensation will afford only h thermal units per pound. Then the thermal units which will be contained in the calorimeter after the entrance of the w pounds of steam are,

$$\frac{P}{100} \times w \times h + \left(w - \frac{P}{100} \times w\right) H + W \times t_1 \times s_1.$$

But by the observation of t_2 and determinations of c we have, the heat present in the calorimeter after condensation also equals

$$(w + W) \times (t_2 + c)\, s_2;$$

whence,

$$\frac{P \times w \times h}{100} + \left(w - \frac{P \times w}{100}\right) H + W t_1 s_1 = (W + w)\,(t_2 + c)\, s_2;$$

or,

$$P = 100 \left\{ \frac{-W\,[(t_2 + c)\, s_2 - t_1 s_1] + w\,[H - (t_2 + c)\, s_2]}{w\,(H - h)} \right\} \qquad (1)$$

* See Rankine's *Steam Engine*, Art. 209.

II. That for the above conditions the magnitudes of the several partial errors are as follows:

Error due to	weight of condensed steam		+ 0.35
"	"	initial temperature of water	+ 0.15
"	"	final " "	− 0.32
"	"	weight of condensing water	− 0.06
"	"	steam pressure	+ 0.24

III. As the ratio of the weight of condensing water to the weight of steam condensed exceeds thirteen to one, the errors due to the temperatures are proportionally increased—all other errors remaining sensibly constant.

Consequently the lower the range of temperature in the calorimeter the greater the error, for example, for a range of 5° the condensing water must be 239 times the steam condensed, and the errors of final and initial temperatures would be $\frac{239}{13} = 18$ times the amounts in II. *The most general law is therefore that the total error is a minimum when the range of temperatures in the calorimeter is greatest.*

IV. That for the above conditions the effect of dropping out the terms $\Delta\omega$, ΔW, Δt_2, Δt_1, ΔH and Δh within the parentheses. of formulæ (6) to (12) does not sufficiently affect the results to make a total variation, even neglecting signs, of as much as 0.05 per cent.

Consequently these formulæ may be simplified * and written as follows:

FORMULÆ FOR DISCREPANCIES DUE TO INSTRUMENTAL ERRORS IN PRIMING TESTS.

Twice the sum of these errors, taking all signs alike, gives the greatest possible discrepancy of duplicate priming tests:

$$\left.\begin{array}{l}\text{Error due weight of con-}\\ \text{densed steam in per-}\\ \text{centage of priming.}\end{array}\right\} = +100\frac{C}{1+C}\left\{\frac{\frac{W}{\omega}\left[t_2+c)\,s_2 - t_1\,s_1\right]}{H-h}\right\}\text{per cent.}$$

$$\left.\begin{array}{l}\text{Error due final temperature}\\ \text{of condensing water.}\end{array}\right\} = -100\,\Delta t_2\left\{\frac{W}{\omega(H-h)} + \frac{1}{H-h}\right\}\text{per cent.}$$

$$\left.\begin{array}{l}\text{Error due initial temperature of}\\ \text{condensing water.}\end{array}\right\} = +100\,\Delta t_1\left\{\frac{W}{\omega(H-h)}\right\}\text{per cent.}$$

* Each formula is here made equal to the partial differential coefficient of P, with respect to any variable, multiplied by the value of the error due that variable.

$$\left.\begin{array}{l}\text{Error due}\\ \text{steam pres-}\\ \text{sure.}\end{array}\right\} = +100\Delta H\left\{+2\frac{H-(t_2+c)s_2-2\left[\frac{W}{\omega}[(t_2+c)s_2-t_1s_1]\right]}{(H-h)\ 2}+\frac{1}{H-h}\right\}\text{per cent.}$$

$$\left.\begin{array}{l}\text{Error due weight of}\\ \text{condensing water.}\end{array}\right\} \doteq -100\,\Delta W\left\{\frac{+[(t_2+c)\,s_2-t_1\,s_1]}{\omega\,(H-h)}\right\}\text{per cent.}$$

C = per cent. of ω which represents its error of observation.
W = weight of condensing water, ΔW its error in pounds.
t_2 = final temperature, Δt_2 its error, in degrees.
t_1 = initial " Δt_1 its error, "
c = loss due radiation in degrees.
H = total heat of evaporation of steam.
$H - h$ = latent " " "
ΔH and Δh, errors in heat units.
S_2 = mean specific heat of liquid water between O and t_2.
S_1 = " " " " " O and t_1.

The table on p. 376 exhibits the application of these formulæ to the results of Hoadley's and Regnault's steam measurements, and to the case of the ordinary barrel and worm used on a less accurate scale.

The tables on p. 377 exhibit the variation of results obtained in the practical use of calorimeters whose theoretical error is shown in the preceding table. In the case of Regnault's apparatus the percentages of priming are obtained from his original publication of his determination of the total heat of evaporation of steam. The figures are deduced by calculating the total heat of evaporation for each pressure by Regnault's standard formula,

$$H = 606.5 + 305\,t_1 \text{ (Centigrade units)},$$

and reducing the difference between the calculated heat and that given by Regnault's experiment to its equivalent in percentage of priming. The results with the Hoadley apparatus are selected from his report on "Warm Blast Boilers." The results with the barrel and ordinary surface condenser were obtained during tests made at the Stevens Institute.

MAXIMUM AND PROBABLE ERRORS OF STEAM CALORIMETERS.

Style of Apparatus.	Steam pressure absolute pounds per sq. inch.	Ratio.	Pounds (avoirdupois).						Degrees Fahrenheit.				Effect of Errors in Percentage of Priming.			Fahrenheit, HEAT UNITS.				Effect of Errors in Percentage of Priming.		Percentage of Priming.	
			W			ω			t_2	t_2	t_3					H		h					
			Actual.	Error of Measurement.	Effect of Error in percentage of Priming.	Actual.	Error of Measurement.	Effect of Error in percentage of Priming.	Actual.	Actual.	Actual.	Errors of Measurement. $E_{t_1}, E_{t_2}, E_{t_3}$.				Actual.	Errors of Measurement.	Actual.	Errors of Measurement.				
		$\frac{W}{\omega}$		Ew	$\frac{dP}{dW}E_w$		E_ω	$\frac{dP}{dW}E_\omega$					$\frac{dP}{dt_2}Et_2$	$\frac{dP}{dt_1}Et_1$	$\frac{dP}{dt_3}Et_3$		E_H		E_h	$\frac{dP}{dH}E_H$	$\frac{dP}{dh}E_h$	Maximum Error.	Probable Error.
Ordinary open Barrel Calorimeter.	70	12	240	0.125	0.056	20	0.125	0.67	120	40	—	0.25	0.334	0.335	—	1206	0.3	305	1.0	0.029	0.014	1.44	0.83
Ordinary Condensing Worm Calorimeter.	70	14	77	0.125	0.22	5.6	0.016	0.35	120	40	100	0.25	0.38	0.38	0.028	1206	0.3	305	1.0	0.11	.001	1.72	0.74
Hoadley's Condensing Worm Calorimeter.	70	22	216	0.06	0.03	9.5	0.02	0.23	94	50	—	0.05	0.063	0.063	—	1206	0.3	305	1.0	9.029	.01	0.44	0.26
Regnault's Condensing Worm Calorimeter.	67	56	147	0.001	0.001	2.66	0.00001	0.0005	61	37	37	0.005	0.03	0.03	—	1205	0.3	300	1.0	0.04	.022	0.13	0.05

RESULTS OF CONSECUTIVE TESTS WITH

REGNAULT'S APPARATUS. **J. C. HOADLEY'S APPARATUS.**

Time.	W Pounds.	w Pounds.	Temperatures Fahrenheit. $t_2°$	$t_1°$	$t_3°$	p Absolute lbs. per □ in.	Per cent. of Priming.	Per cent. of Priming.	p Absolute lbs. per □ in.	Temperatures Fahrenheit. $t_2°$	$t_1°$	$t_2°$	w Pounds.	W Pounds.	Time.
.....	146.697	2.61	61.18	37.42	.....	56.32	0.46	0.58	68.9	.....	44.88	94.4	9.7	217	.....
.....	146.69	2.98	63.82	40.73	.....	57.17	0.34	1.72	90.2	.....	38.45	102.62	12.7	217	.....
.....	146.69	2.66	72.21	51.60	.....	62.34	0.	1.75	65.8	.....	38.0	77.65	7.83	217	.....
.....	146.679	2.86	74.41	52.29	.....	66.49	0.11	0.53	51.3	.....	43.63	93.07	9.68	217	.....
.....	146.706	2.95	61.16	38.16	.....	78.42	0.38	0.28	79.7	.....	35.48	86.2	9.75	217	.....
.....	146.679	3.09	64.42	40.57	.....	78.67	0.80	1.38	82.5	.....	40.05	88.43	9.5	217	.....
.....	146.696	3.00	61.11	37.69	.....	81.13	0.16	0.44	89.7	.....	41.95	91.8	9.84	217	.....
.....	146.697	3.29	63.00	37.47	.....	84.14	0.09	1.16	35.6	.....	41.65	104.	12.64	217	.....

RESULTS OF CONSECUTIVE TESTS WITH

OPEN BARREL CALORIMETER CONNECTED ON THE SAME SUPPLY PIPE WITH ORDINARY SURFACE CONDENSER.

Time.	W Pounds	w Pounds.	Temperatures Fahrenheit. $t_2°$	$t_1°$	$t_3°$	p Gauge lbs. per □ in.	Per cent. of Priming.	Per cent. of Priming.	p Gauge lbs. per □ in.	Temperatures Fahrenheit. t_{20}	$t_1°$	$t_2°$	w Pounds.	W Pounds.	Time.
8.12	242.25	34.75	125.5	37.0	.....	48	+50	.....	.....	.....	.....	.....	.....	.....	8.12
8.35	242.25	22.75	136.75	38.5	.....	45	+ 7	+3.8	45	102.5	50.25	123.75	5.297	75.	8.35
9.02	242.25	19.50	120.55	39.75	.....	54¼	+ 9	+2.75	54¼	100.5	39.75	119.	5.625	77.	9.02
9.45	242.25	12.25	117.0	39.75	.....	56	−48	+2.54	56	100.75	40.75	119.	5.544	76½	9.45
10.00	.....	.....	.....	.....	.....	.....	.....	+2.48	54½	97.	39.75	119.75	5.594	75.	10.00
10.30	250 25	20.25	128.5	38.25	.....	53½	− 4.3	+1.72	53½	98.	39.75	120.3	5.638	74.78	10.30
11.00	250.25	17.25	116.25	39.25	.....	55	− 3.	−2.35	55	101.25	38.75	120.25	5.544	75.	11.00
11.30	250.25	19.25	114.75	39.25	.....	52½	+12.	+1.00	52½	100.25	38.25	117.75	5.563	75.	11.30

DISCUSSION.

Mr. Chas. E. Emery.—I consider this paper a valuable contribution to our knowledge on the subject. It has been common for many of us to test the quality of steam by looking at an issuing jet from a gauge cock or other outlet, and it has been supposed that a comparatively small quantity of mist in the steam will change the character of the jet, but what that quantity was definitely we have had no means of determining before. It is a source of gratification to know that it is so small as practically to make it unnecessary to use a calorimeter when the test shows that the steam is dry. I feel grateful to Prof. Denton for having settled the question in so satisfactory a manner, and trust that the photographs presented may be framed and hung in the society's rooms where they may be consulted. The illustrations are good reproductions but the originals are necessarily more clear.

I will only add that many have observed that a very small quantity of refrigerating surface will cause inconvenience from water of condensation. I recollect that in the expansion experiments under the government we had the indicator set with exposed pieces of brass pipe only about eight inches long, but there was trouble all the time with water blowing out around the piston and wetting the paper, which was overcome by simply felting these short pieces of pipe. Referring to the remarks in regard to entraining water, I have of late years found that water lodging in the pockets of steam pipes will be carried along by currents of much lower velocity than I thought possible in former years. The Madison Avenue steam pipe in New York was 10½ inches in diameter and about half a mile long, and run up a hill from the boiler house at a steep grade. In starting it to supply less than half a dozen houses I at first placed a trap only at the bottom of the hill, expecting that, with the very low velocity of steam which would be required at first, the water would all run back under the current of steam, but this action did not take place. On the contrary, the water would accumulate ahead of the current of steam until it blocked the pipe, so as to be periodically forced into one of the buildings at the end of a line on a side street, completely disarranging the apparatus, and it became necessary in that half mile of large pipe to put in two additional traps, which remedied the difficulty. I was also annoyed in one of the very large buildings supplied by the company with the statement that water occa-

sionally came into the pumps and caused annoyance. It did not seem possible, but on examining the grade of the long pipe running through the basement to the rear it was found that the men had carelessly allowed it to sag in the center about an inch, and although the pipe was 10½ inches in diameter and large enough to have carried steam satisfactorily for four times as much apparatus as there was in the building, the water in this little pocket would periodically be carried forward causing the annoyance referred to. (Applause.)

Prof. C. H. Peabody.—I would like to ask Professor Denton how much experience would be required in making tests of this sort in order to be able to judge the quality of the steam from the appearance of the jet? If it would be possible with a small amount of experience to determine whether the steam was nearly dry or whether it contained one per cent. or two per cent. of moisture?

Mr. W. H. Weightman.—If so small an amount as one per cent. of moisture is apparent in the discharged steam, I should like to ask the author of this paper what would be the effect of carrying on the experiment in a moist or humid atmosphere? Would such humidity have any marked effect upon the results or upon the appearance of the steam? Would the projected steam hold a condition and appearance of its own independent of the surrounding atmosphere, or would it be affected at once?

Mr. Geo. H. Babcock.—We are greatly indebted to Professor Denton for this paper, because it establishes with a sort of mathematical exactness certain things which we have heretofore assumed *a priori;* but we need to keep in mind that steam expanding from a high pressure into a lower, without loss of heat, becomes superheated, and that there would be a difference in the appearance of this issuing jet according to the pressure from which it is allowed to escape; that is, the higher the pressure the more the superheating, and therefore the drier it would appear at the point of issue. We could not therefore say that the same appearance which shows dry steam with 150 lbs. pressure would be required as proof of dry steam at 50 lbs., because there would be more superheating with the first, as is shown by Professor Peabody's paper on the calorimeter. In some of the earlier experiments with the Babcock & Wilcox boiler at the Calvert Sugar Refinery in Baltimore, Mr. Stillman used to take much pride in showing that the steam was dry. His method was to open a petcock and allow

the steam to escape, the jet being quite invisible for about two inches. He would then take a common match and light it by the heat of the steam in this invisible space, holding that there was no better proof of the steam being absolutely dry. It seems by Professor Denton's statement that that must have been dry steam; but it is also probable that it must have been slightly superheated or it would not have lighted a match; but that boiler had no superheating surface, and the steam in the boiler could not have been superheated.

Prof. Denton.—Answering Prof. Peabody's question I would say that I think a departure of one per cent. of steam from dryness cannot fail to be recognized by anybody whose attention is once called to this method. One per cent. will unquestionably show a decided difference between dry steam and a steam with that amount of moisture. But I have stated in the paper that when we go beyond two per cent. the method fails. If it is a fact, as I have allowed myself to assume—and I should like to be verified upon this point by men of long experience who are here—if it is a fact that moisture in steam always shows by irregular flowing, you cannot have priming of any great amount in a boiler without irregularity of action. It has been suspected that boilers give a great deal more moisture than they actually do. The moisture question has been made too much of. I believe that boilers that give a continuous gaseous flow of steam have dry steam. I believe that nine out of ten boilers will be found to give steam very close to dryness if they run regularly at all. If they do not run regularly the test will be off. Nobody will desire calorimeter discriminations to test a boiler that violently primes. The real test is to find when a boiler is doing much uniform work how much heat is to be charged to it. I think the distinctions are going to narrow themselves down to between zero and one per cent. in tests that are of any value.

As to Mr. Weightman's point, it is well raised. If that jet flowed into an atmosphere saturated, I think there would be a difference in its appearance. There generally is not much moisture over a boiler where a jet will be located. But the point is well raised. I have been looking, since the paper was written, for a foggy atmosphere, but when it came I could not use it, and the point is still open. Mr. Babcock's remarks about the superheating were also well taken. Of course, all the energy of flow goes into the jet, and it is superheated. Undoubtedly the difference of

pressure will affect the appearance, as he most correctly states, and for that reason I made the test at 55 pounds and 95 pounds, and showed jets during all conditions at those two pressures, and, as remarked in the paper, the 95 pound jet always tends more towards whiteness. There is a slight departure of the high pressure jets from the absolutely invisible color of the low pressure jets, but I am encouraged to believe from experiments for 55 to 95 pounds that no ordinary pressure would prevent the steam being still gaseous, and quite blue, and that whiteness would never show unless there was absolute moisture added to the steam.

Since writing the paper I have been troubled about one point. In cooling this jet it was all cooled at the surface; all the chilling that was done was done on the steam around the interior surface of the pipe, and of course it all clung to the surface of the jet. By looking at the jet with a magnifying glass this whiteness was a series of lines of white water hanging together and between them would be little strips of gas, the lines being so close together as to present a white appearance. Now, if the water emanated from the boiler, we might have the moisture similarly distributed in the jet; but it seems to be a fact that water in the jet tends to form a stream of its own; all the water tends to cling together.

Referring to Mr. Emery's point as to water being carried along with the steam, I am very glad to have the conclusions regarding Figs. 70 and 71 confirmed by his account. It appears that the velocity in the pipes will carry the water to an engine, and if we get a wet jet at any considerable distance from the boiler, we must not say that the boiler made the water, until it is traced clear back to the boiler.

Mr. Oberlin Smith.—I would like to ask what occurred when that drain cock was shut, and then the throttle valve was shut; did that make any difference in the jet?

Prof. Denton.—I did not try that particular experiment.

Mr. Oberlin Smith.—I should think then that the jet would still show white. If the water ran along the pipe at slow velocity, and was not allowed to escape, it would be carried out of the jet.

Prof. Denton.—I arranged a drum on the outflow pipe similar to that illustrated in the cuts although not large, and the jet was always white, no matter how thoroughly it was drained.

Mr. W. F. Durfee.—I would like to ask Professor Denton, if he has tried this experiment, whether there would be any difference

in the apparent dryness of the steam in the same boiler under the same conditions if the steam was taken out upon the surface of the boiler shell or from the interior of the mass of steam in the boiler by means of a pipe entering that mass of steam?

Prof. Denton.—I cannot answer from any experience. My belief is if there was a quiescent action in there it would make no difference; but when Regnault made his tests he thought that of sufficient importance to carry his inside pipe in and wind it as a worm.

APPENDIX TO DISCUSSION ON APPEARANCE OF STEAM JETS.

During the discussion the point was made that the appearance of a jet of steam was that of superheated steam if the steam issuing from the boiler was perfectly dry. I assented to this view on the ground that the energy which produced the velocity acted to superheat the jet. This fact would not prevent the identification of dry steam by the jets, but it would, perhaps, necessitate the examination of jets of dry steam at all practical pressures, so that differences of appearance due to possible different amounts of superheating might be recognized.

The energy producing the velocity of steam flowing from one reservoir into another is that represented by the area *ABCD* of the accompanying figure (Fig. 107), *CD* being an adiabatic curve. This

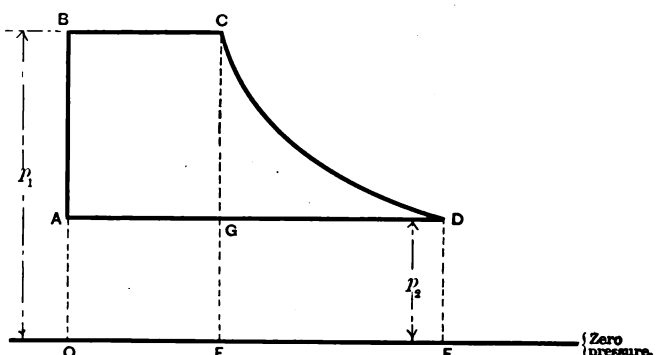

Fig. 107.

area expressed in foot-lbs. equals the *vis viva* of the steam, and to obtain the velocity we have simply to equate these quantities and solve for the velocity. Thus, if p_1 is 105 lbs. per square inch and p_2 is 67 lbs., *BC* is to be taken as 4.2 representing the volume in

cubic feet of one pound of steam at 105 pounds pressure, and AD this volume expanded to 67 lbs., making the latter 6.3 cubic feet.

We may then take the mean effective pressure just as though $ABCD$ was the indicator card from a steam engine, and we should find it to be 31 lbs. per square inch. The value of $ABCD$ in foot-lbs. is then,

$$31 \times 144 \times 6.3 = 28{,}000.$$

We therefore have $28{,}000 = \frac{\text{Mass}}{2} \times \overline{\text{Velocity}}^2 = \textit{vis viva}$. The mass is one lb. divided by $32\frac{1}{6}$, hence,

$$\text{Velocity} = \sqrt{2 \times 28{,}000 \times 32\tfrac{1}{6}} = 1{,}350 \text{ feet per second.}$$

The weight that would flow per second through an orifice one square foot in area would be

$$\frac{1350}{\text{Volume } AD} = 250 \text{ lbs.}$$

Now the energy which, by these principles, would produce the flow of a jet at 95 lbs. gauge pressure into the atmosphere equals 114,475 foot-lbs. Hence, if we admit that this energy is devoted to superheating the jet, the latter would receive $\frac{114{,}475}{772} = 150$ British thermal units. This would superheat the steam about 300 degrees Fahr. Now, by reference to photographic Fig. 68, it may be seen that 9 degrees of superheating produced by throttling created a distinct and very considerable increase in the distance from the orifice over which the jet was of the invisible appearance.

Experiments with jets superheated by flame, 200 degrees Fahr. above the point of saturation, show that the steam is thereby made so invisible as to dissolve into the atmosphere without being discernible to the eye—the white cloud shown by the several photographs being entirely absent.

Evidently, therefore, the jets which are invisible for only half an inch from the orifice cannot be superheated by the amount of the energy causing flow, and my assertion that such was the case is therefore incorrect.

Another view, suggested by a member shortly after the discussion, was that all the energy of the jet being in the form of

kinetic energy, the steam as seen flowing was below the point of saturation by an amount equal to the difference between the energy of flow and the fall of internal heat corresponding to the highest and lowest pressures.

According to this idea, we should have for 95 lbs. gauge pressure in the boiler and the atmosphere for the lower pressure, a fall of internal heat of 35 thermal units. This taken from the 150 units represented by the energy of flow leaves 115 units to cause moisture in the steam. The amount of moisture would thereby be about *twelve per cent.*

Now, by photograph No. 64, one per cent. causes distinct whiteness in the jet over the portion of the latter which is blue or invisible when the steam is not laden with this amount of moisture. Evidently, therefore, the energy of flow cannot all be considered to abstract heat from the steam with any better results than are afforded by the superheating theory. The consideration of the above facts suggested the advisability of investigating the thermodynamic action of the jet sufficiently to obtain some view of the distribution of heat which would be consistent with the various facts observed, and such an investigation is given below under the heading: "Theoretical Discussion of Distribution of Heat in Jet." The conclusion reached is based upon the assumption that the portion represented by *ABCG* of the energy of flow tends to superheat the steam, while the area *FCDE* abstracts heat just as occurs in adiabatic expansion in a steam engine. Also that the area *OADE* either consumes itself in overcoming the resistance of the atmosphere or (in considering a portion of the jet at a pressure above the atmosphere), is lodged in the portion of the jet which is at a lower pressure than the part under observation.

On these bases it appears by the numerical calculations in Table I., that for 90 lbs. boiler pressure (gauge) a portion of a jet which is at atmospheric pressure will contain 4 per cent. of moisture, but that a portion which is at 50 lbs. pressure contains practically no moisture.

The question therefore arises, At what pressure is that portion of the jet adjoining the orifice, where the invisible appearance exists? To answer we must refer to experimental researches on the outflow of steam, the most valuable discussion of which comes from Rankine, who in an article on the subject in the *Engineer*, 1869, points out that by the experiments of Napier on the flow of

steam, for all boiler pressures up to 300 lbs., *the maximum weight flows when the pressure opposed to the flow is about* $\frac{6}{10}$*ths of the boiler pressure, and that any* reduction of the opposing *pressure below this proportion* of the boiler *pressure*, produces no practical change *in the weight flowing per unit of time.*

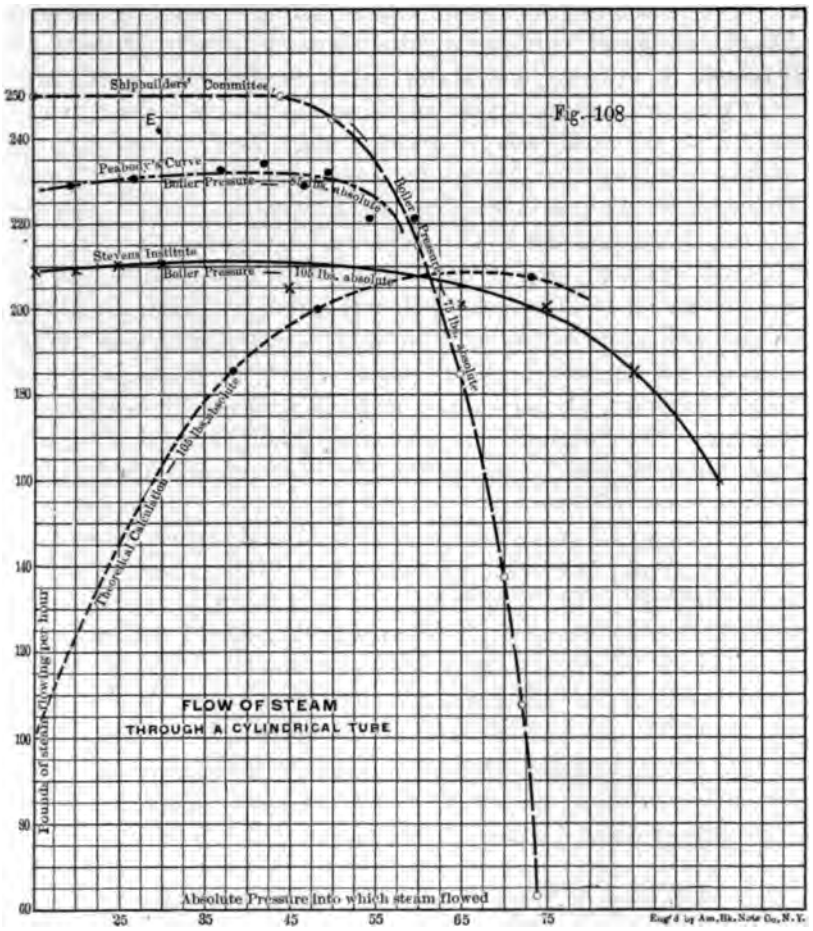

This remarkable result has since been confirmed by the elaborate and admirable experiments of the committee on safety valves of the Institute of Shipbuilders of Scotland. The results of their experiments are summarized on page 893 of D. K. Clark's *Manual for Mechanical Engineers.* Figure 108 shows these results plotted in the form of a curve.

It may be seen that the maximum flow obtains for a back

pressure equal to 0.58ths of boiler pressure. Other curves are shown, one representing Professor Peabody's results, and another experiments made by the writer. These confirm the fact that the maximum flow occurs when the back pressure is at about $\frac{6}{10}$ths of boiler pressure, and that there is no * change in the rate of flow for back pressures less than this amount. The results of calculating the weight of outflow are also shown by a curve, from which it is seen that theory makes the maximum flow occur at the same back pressure as experiment, but does not maintain the flow constant after the attainment of a maximum. Now, the explanation of the constant flow for all back pressures below $\frac{6}{10}$ths boiler pressure, which was offered by Rankine in the article referred to, is that the pressure at the narrowest portion of the jet never falls below about $\frac{6}{10}$ths of the boiler pressure, no matter how low the pressure may be reduced below this point. Consequently the weight which flows per unit of time remains that due to the density and velocity corresponding to the back pressure of $\frac{6}{10}$ths boiler pressure, for all values of back pressure less than this amount. The Shipbuilders' committee found this principle true, even when the back pressure was the best possible vacuum. *It follows from this principle that that portion of a jet immediately adjoining the end of the tube or orifice through which steam flows into the atmosphere, is at a pressure very little below $\frac{6}{10}$ths of the boiler pressure. Hence, by the results in Table I., the steam at this point is in a condition which is practically exactly saturated. An examination of the results in Table I. for both* 105 *and* 70 *lbs. boiler pressure will illustrate that the above result is practically true for all pressures. In other words, steam issuing from a boiler into the atmosphere not obstructed by wire-drawing so as to sensibly lower its normal velocity of flow, is always practically dry close to the orifice of exit.*

THEORETICAL DISCUSSION OF DISTRIBUTION OF HEAT IN JET.

Suppose steam to flow from a boiler A into the atmosphere through a straight tube, as per Fig. 109.

Let A, unit of weight of steam, be represented by the rectangles $a_0b_0c_0d_0$ . . . $a'''_0b'''_0c'''_0d'''_0$, Fig. 109, and by the length a_1b_1,

* Professor Peabody in his paper locates the maximum experimental flow at a back pressure equal to about $\frac{3}{10}$ths of boiler pressure, basing it on the observation marked E. Evidently this observation is an accidental result, and I treat it as such in my remarks.

Fig. 110. Let the gauge pressure in the boiler be constantly 90 lbs. per square inch.

Conceive the dimensions of the tube to be such that the weight of steam discharged per second to be unity. Then in one second the rectangle of steam $a'''_0b'''_0c'''_0d'''_0$ expands from the pressure Oa_1 and volume a_1b_1, Fig. 110, to the pressure DE and volume OD, and simultaneously it moves from g_1 to g_7. Conceive that when occupying the positions $g_1, g_2, \ldots g_7$ the steam is at the

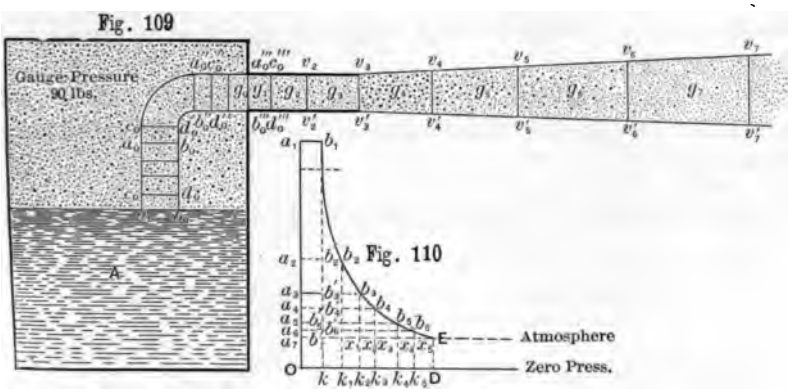

pressures Oa_1, $Oa_2 \ldots Oa_7$, Fig. 110. Then the volumes $c'''_0v_2v'_2d'''_0$, $v_2v_3v'_3v'_2 \ldots v_6v_7v'_7v'_6$ are represented by a_2b_2, $a_3b_3 \ldots a_7b_7$, Fig. 110, b_1E being an adiabatic curve. The phenomena occurring during one second are then as follows:

(1) Unity weight of water is vaporized in A, requiring the expenditure of heat from the main source equal to

$$H = \text{total heat of evaporation for 90 lbs. pressure.}$$

The unit of weight thus vaporized displaces $a_0b_0c_0d_0$, causing the latter to force g_0 to g_1. Thereby there is performed the work Oa_1b_1k, of which the part Oa_7b_7k is expended against the atmosphere and $a_7a_1b_1b'_7$ creates velocity in g_1. We have thus expended a portion of H, but have not lowered the latent heat or temperature of g_1, since Regnault's value for H includes the work of forcing the steam out of a boiler at constant pressure.

(2) g_1 becomes g_2, and thereby the work $kb_1b_2k_1$ is performed, the portion $kb'_7x_1k_1$ overcoming the resistance of the atmosphere and $b'_7b_1b_2x_1$ creating velocity.

(3) g_2 becomes g_3, g_3 becomes $g_4 \ldots g_6$ becomes g_7, and

thereby the amounts of work $x_1b_2b_3x_2$ . . . x_5b_6E create velocity in the steam and $k_1x_1x_2k_2$ . . . k_5x_5ED overcome the atmospheric resistance.

Summarizing these effects we have the distribution of heat as follows:

Let V_2 = the volume of a pound of saturated steam for the pressure DE, and H_E = the total heat of evaporation for this pressure.

In forcing the steam from the boiler there is performed upon the steam $a_7a_1b_1b'_7$ units of work and upon the atmosphere $Oa_7b'_7k$ units of work.

By adiabatic expansion to condition E, heat is abstracted equal to kb_1ED. By proper transformation the value of this area may be written,*

---

* The work $kb_1ED = \int_{v_1}^{u_2} p\,du$, in which u is any volume of the mixture after commencement of expansion.

v_1 = volume of one pound of saturated steam.
u_2 = volume of the mixture at end of expansion.

$$\int_{v_1}^{u_2} p\,du = \int_{p_2}^{p_1} u\,dp - (p_1 - p_2)\,v_1 + (u_2 - v_1)\,p_2 = \int_{p_2}^{p_1} u\,dp - p_1v_1 + p_2u_2. \quad (1.)$$

$$u_2 = \frac{1}{\frac{dp_2}{d\tau_2}}\left(J \text{ hyp log } \frac{\tau_1}{\tau_2} + v_1 \frac{dp_1}{d\tau_1}\right). \quad (2.)$$

Rankine's Steam Engine, Art. 281.
Whence, *Rankine's Steam Engine*, Art. 284.

$$\int_{p_2}^{p_1} u\,dp + p_2u_2 - p_1v_1 =$$

$$J\left\{\tau_1 - \tau_2\left(1 + \text{hyp log } \frac{\tau_1}{\tau_2}\right)\right\} + (\tau_1 - \tau_2)\,v_1\frac{dp_1}{d\tau_1} - p_1v_1 + p_2u_2 =$$

$$J(\tau_1 - \tau_2) - \tau_2\left(J \text{ hyp log } \frac{\tau_1}{\tau_2} + v_1\frac{dp_1}{d\tau_1}\right) + \tau_1v_1\frac{dp_1}{d\tau_1} - p_1v_1 + p_2u_2. \quad (3.)$$

but

$$\tau_2\left(J \text{ hyp log } \frac{\tau_1}{\tau_2} + v_1 \frac{dp_1}{d\tau_1}\right) = \tau_2u_2\frac{dp_2}{d\tau_1} \text{ by (2).}$$

Also $\tau_1v_1\frac{dp_1}{d\tau_1}$ = latent heat per pound of steam at p_1 in foot-pounds per Regnault's tables, and $\tau_2u_2\frac{dp_2}{d\tau_2}$ = latent heat per $\frac{u_2}{v_2}$ lbs. of steam at p_2 in foot-pounds per Regnault's tables.

Rankine's Steam Engine, Art. 255.

Hence (3) may be written,

$$kb_1ED = J(\tau_1 - \tau_2) - \frac{u_2}{v_2}H'' + H' - p_1v_1 + p_2u_2, \quad (4.)$$

$$kb_1ED = H_1 - Oa_1b_1k - (H_E - DE \times V_2) + Q, \ldots (1.)$$

in which Q is a quantity representing heat supplied by the liquefaction * of a certain portion of steam in accordance with the law of adiabatic expansion.

If now we consider that the work $a_7a_1b_1b'_7$ is available to tend to counteract the effect of Kb_1ED, we may write:

$$Kb_1ED - a_7a_1b_1b'_7 = H_1 - Oa_1b_1k - (H_E - DE \times v_2) + Q' \quad . \quad (2.)$$

In which Q' is a value representing liquefaction less in amount than Q.

Equation (2) may be written:

$$\begin{aligned} Q' &= Kb_1ED + Oa_1b_1k - a_7a_1b_1b'_7 - DE \times v_2 - (H_1 - H_E) \\ &= b'_7b_1E + Kb'_7ED + Oa_7b'_7K + a_7a_1b_1b'_7 - a_7a_1b_1b'_7 - DE \times v_2 \\ &\quad - (H_1 - H_E) \\ &= b'_7b_1E + Kb'_7ED + Oa_7b'_7K - DE \times v_2 - (H_1 - H_E) \quad . \quad (3.) \end{aligned}$$

---

in which

H' = latent heat per pound of steam at p_1 foot-pounds.
H'' = latent heat per pound of steam at p_2 foot-pounds.

Add and subtract H'' in (4).

Then,

$$kb_1ED = J(\tau_1 - \tau_2) + H''\left(\frac{v_2 - u_2}{v_2}\right) - H'' + H' - p_1v_1 + p_2u_2. \quad . \quad (5.)$$

$\tau_1 - \tau_2 = t_1 - t_2$, in which t_1 and t_2 are temperatures above 0 on Fahrenheit scale. Hence (5) may be written,

$$\begin{aligned} kb_1ED &= Jt_1 + H' - (Jt_2 + H'') + H''\left(\frac{v_2 - u_2}{v_2}\right) - p_1v_1 + p_2u_2 \\ &= H_1 - H_E + H''\left(\frac{v_2 - u_2}{v_2}\right) - p_1v_1 + p_2u_2. \quad . \quad . \quad . \quad . \quad . \quad (7.) \end{aligned}$$

in which H_1 and H_E are total heats by Regnault's tables in foot-pounds.

But

$$p_2u_2 = p_2\left(v_2 - \frac{v_2 - u_2}{v_2}v_2\right) = p_2v_2 - p_2v_2\left(\frac{v_2 - u_2}{v_2}\right).$$

Hence (7) may be written,

$$kb_1ED = H_1 - p_1v_1 - (H_E - p_2v_2) + \frac{v_2 - u_2}{v_2}(H'' - p_2v_2). \quad . \quad (8.)$$

Now $\frac{v_2 - u_2}{v_2}$ is the proportion of v_2 which liquefies and is equal to Q in (1); also

$$p_1v_1 = Oa_1b_1k$$
$$p_2v_2 = DE \times v_2$$

hence we have (1) as per text.

* *Rankine's Steam Engine*, equation (2), Art. 283.

Equation (3) divided by the latent heat of steam for the pressure DE gives the proportion of moisture in the steam represented by the portion g_7 of the jet, Fig. 109.

For any other portion of the jet as g_3, which is at the pressure Oa_3, we may conceive the action to be the same as though a jet flowed into an atmosphere at a pressure Oa_3, since g_3 absorbs only the dynamical effects represented by the area $a_3a_1b_1b_3$ which lies above a_3b_3. In general, therefore,

Let p_1 be the absolute boiler pressure.

p_2, any lower pressure.

v_1, the volume of a pound of saturated steam at p_1.

v_2, the volume of a pound of saturated steam at p_2.

u_2, the volume of a pound of steam expanded from p_1 to p_2 adiabatically.

H_1, Total heat for p_1.

H_2, Total heat for p_2.

Table I. shows values of Q'.

for $p_1 = 105$ and p_2 ranging from 15 to 70 lbs. Also

for $p_1 = 70$ and $p_2 = 15$ and 33 lbs.

From the table it appears that the value of Q' becomes zero for a value of p_2 nearly corresponding to the back pressure which gives the maximum outflow measured by weight. Both theory and experiment prove * that this pressure is that of the steam at or near the extremity of the nozzle or tube.

Hence it follows from the above deductions that *steam as seen close to the end of the tube through which it issues into the atmosphere is neither sensibly superheated nor below the condition of saturation. Hence dry steam, if allowed to flow through an orifice into the atmosphere under conditions such that it attains its maximum velocity at about the instant of exit into the atmosphere, appears invisible for a very short distance from the orifice as per photographic views of the paper. The slightest obstruction to its outflow, created by throttling, superheats the steam and less than five thermal units produces the considerable increase in the length of the invisible portion of the jet, shown by photographic Fig.* 68. *The jet is similarly sensitive to the presence of moisture as shown by photographic Fig.* 64.

* See Rankine's Discussion on the "Outflow of Steam," *Engineer*, 1869.

TABLE I.

SHOWING SUPERHEATING OF STEAM JET DUE TO ITS VELOCITY OF FLOW INTO THE ATMOSPHERE.

p_1 lbs. per sq. in.	Ratio of Expansion. r	$\frac{p_1}{p_2}$	p_2 lbs. per sq. in.	v_2 cu. ft.	u_2	$v_2 - u_2$	$\frac{p_m - p_1}{p_1}$ Table VII. Rankine's Steam Engine	$\int_{p_2}^{p_1} u\,dp$ Ft. lbs.	$\int_{v_1}^{u_2} p\,du - p_2(v_2 - v_1)$ Ft. lbs.	H_2 Ft. lbs.	Latent Heat. Ft. lbs.	$p_2(v_2 - u_2)$ Ft. lbs.	LIQUEFACTION OR VALUE OF Q'. Ft. lbs.	Per cent. of moisture.	
Col. 1	2	3	4	5	6	7	8	9	10	11	12	13	14	15	
105	5.76	7.	15.	25.94	24.19	1.75	0.313	114,475	60,050	885,198	745,198	3,770	+ 28,343	4%	$p_1 = 105$, $H_1 = 913,135$.
105	5.	5.97	17.56	22.34	21.00	1.34	0.329	104,475	51,555	887,288	741,288	3,385	+ 22,323	3%	
105	4.	4.67	22.5	17.77	16.80	0.97	0.359	91,200	41,300	890,498	734,498	3,143	+ 15,590	2%	
105	3.	3.39	30.98	13.20	12.60	0.6	0.385	73,350	28,600	894,398	724,398	2,678	+ 7,185	1%	
105	2.5	2.77	37.94	10.90	10.50	0.4	0.388	61,590	21,070	897,398	717,398	2,199	+ 3,134	½%	
105	2.	2.16	48.63	8.60	8.40	0.2	0.370	46,990	12,880	900,898	706,898	1,396	− 753	2° suphtng.	
105	1.5	1.57	66.92	6.38	6.30	0.08	0.293	27,910	4,930	905,860	697,860	771	− 3,178	8° suphtng.	
70	4.	4.67	15.	25.94	24.4	1.54	0.359	88,305	39,985	885,198	745,198	3,326	+ 15,359	2%	$p_1 = 70$, $H_1 = 906,227$.
70	2.	2.16	32.47	12.62	12.2	0.42	0.370	45,500	12,560	894,077	722,077	1,963	− 1,652	4° suphtng.	

CCCXXVII.

ON THE FRICTION OF PISTON PACKING RINGS IN STEAM CYLINDERS.

BY JAMES E. DENTON, HOBOKEN, N. J.

(Member of the Society.)

A MEASUREMENT of such friction has been made with a measuring device which consists essentially of the following arrangement:

A cylinder *M* (Fig. 75), 6 inches bore by 9 inches stroke is fitted with a piston *A* long enough to permit a packing ring *C* one inch wide to occupy the position shown. The ordinary packing rings *B*, *B*, preventing the access of steam into the space* immediately surrounding *C*. The latter is supported upon the outer ends of the levers, *D*, *D*, which are pivoted at *O*, and have their inner ends coupled to the rod *E*. Motion is given to the piston *A* and its attachments through the piston rod *P*. Motion being in the direction of the arrow, the friction of the ring *C* tilts the levers *D*, thus compressing the spring *F*. The resulting movement of the rod *E*, relative to the incasing tube *N* gives motion to a pencil lever *J* through the pitman *G* and the crank *H*. Consequently the motion of the pencil *S* perpendicular to the plane of the paper is proportional to the amount of friction of the ring *C*.

The pencil makes a diagram resembling a rectangle upon paper fastened to a board *K*, *K*. The ring *C* is cut once and is provided with a device by the means of which its tension may be adjusted by a spring. Means are also provided whereby the ring may be drawn together so as not to touch the sides of the cylinder. When in the latter condition the spring *F*† is calibrated by loading the rod *E* at *Q* with known weights and noting the resulting movement of the pencil *S*.

Fac-similes of diagrams are given below. No. 1 (Fig. 76) is the

* This space is kept drained of condensed steam.

† The spring actually resisting the motion of the levers *D* is the torsion of the pivots *O*. The spring *F* is merely shown as an illustration of spring action.

friction at 65 pounds tension per square inch upon the spring C (a boiler pressure of 67 lbs., revolutions from 36 to 115, and any cut-off from $\frac{1}{10}$ to $\frac{3}{4}$), when the parts of the piston and cylinder are thoroughly devoid of lubricant through having been soaked in naphtha. The scale of the diagrams is 250 lbs. per inch of width each side of the center line $C\,C$; that is, the distance d being about $\frac{5}{16}$ of an inch, the friction of the ring C is $\frac{5}{16} \times 250 =$ about 80 pounds, of force for the down stroke. Similarly the distance d_1 being about $\frac{7}{16}$ inch, the total friction of the ring C on the opposite stroke is about 105 pounds. The total normal pressure between the ring C and cylinder M is $65 \times 6 \times 3.4416 =$ 1226 pounds. Therefore the coefficient of friction is about $7\frac{1}{2}$ per cent.

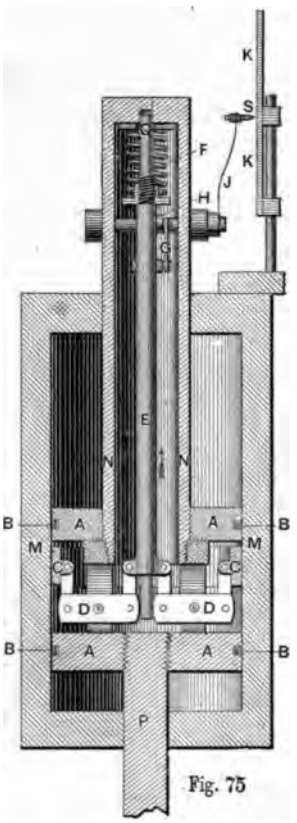

Fig. 75

APPARATUS FOR MEASURING FRICTION OF A PISTON PACKING RING OF A STEAM ENGINE CYLINDER.

Diagram No. 2 (Fig. 77) shows the friction for a feed of cylinder oil of $\frac{1}{2}$ drop per minute* or one drop in two minutes.

It gives a coefficient of friction of about 5%.

Diagram No. 3 (Fig. 78) is for an oil feed of one drop per minute and shows an average coefficient of about 3%. Both diagrams, Nos. 2 and 3, afforded unsatisfactory lubrication, the piston groaning at the ends of the stroke when the engine was run slowly, and the film of oil found upon the interior surfaces was a sticky black paste showing by chemical analysis about 50 per cent. of iron.

Diagram No. 4 (Fig. 79) is for a feed of two drops per minute, and shows a coefficient of about 1%.

The oil upon the interior surfaces for this diagram indicated practically perfect lubrication, as it retained its natural color and was uncontaminated with iron. All of the diagrams were taken after the engine had been run at the respective feeds for about 8 hours.

* The oil used was an average cylinder oil of good reputation, and 5,000 drops represented a pint.

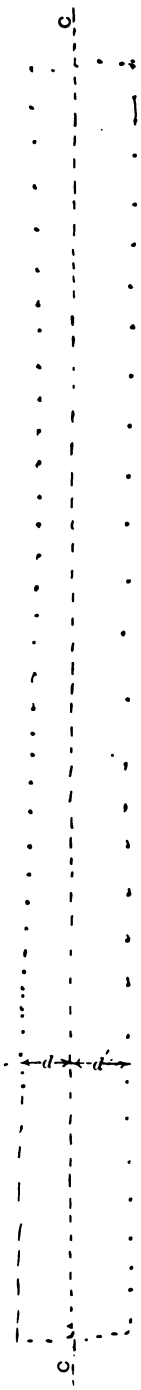

Fig. 76.

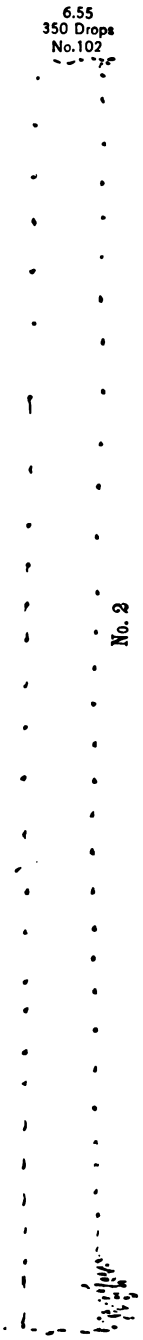

Fig. 77.

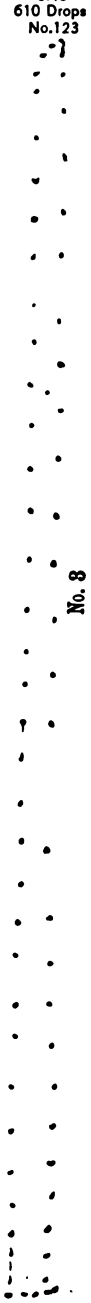

Fig. 78.

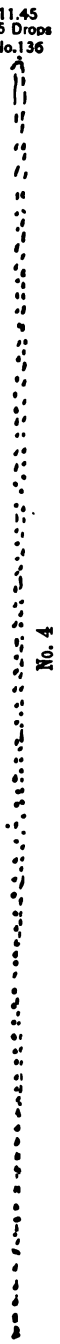

Fig. 79.

All effect of inertia is eliminated by making the pivot *O*, of the levers *D*, coincident with the center of gravity of the ring, the levers *D* and the rod *L* with its attachments.

DISCUSSION.

Prof. R. H. Thurston.—I have been very much interested in the device which Prof. Denton has described. It strikes me as very ingenious and likely to be very useful. I should think the results would probably give us some facts and some figures that would be of great value. It is one of the prettiest things that I have seen in a long time, and I am glad to note the results reported.

Mr. George Schuhmann.—The apparatus described by Prof. Denton is a very ingenious instrument, but the conditions under which the tests were made do not correspond with actual engine practice, because the rings *B*, *B* keep the steam away from the ring *C*, and so prevent certain particles of steam from forcing their way between the inner surface of the cylinder and the outer surface of the ring, which has some influence on the friction of the ring. This is very fully described in Prof. Robinson's paper on "A Rational System of Piston Packing," Vol. II., p. 27, and also in a paper by the same author, "Back Pressure on Valves," Vol. IV., p. 150. While I have not made any experiments on piston rings, I have made enough with valves to satisfy myself that his theory of what he calls "the pressure of the creeping fluid" is correct.

For this same reason I cannot see how Prof. Thurston's experiment of measuring the friction of the piston can give exact results when there is no steam at all in the cylinder. I should think the best way to ascertain the friction of the piston rings would be to take an indicator card of the engine running light and with the rings in position, then remove the rings and run the engine without them, take another card, and the difference will be the friction of the rings. Of course, there would be a waste of steam owing to leakage around the piston, but I do not think this would prevent the indicator from giving an accurate account of the power developed.

Mr. Wm. E. Crane.—Prof. Denton speaks of water in steam being a lubricant. Some years ago a 30 × 60 Corliss engine was erected, and supplied with steam through a 10″ pipe over 200 feet long. The engine was started up and run for nearly a month with uncovered pipe.

During this time it required a large amount of cylinder oil. The pipe was finally covered, and the amount of oil required was materially reduced.

After some four years it became necessary to replace this pipe with a new one, and while the new pipe remained uncovered there was the same difficulty of properly lubricating the cylinder, which difficulty was removed by covering the pipe.

Of course, the condensation was very great in the uncovered steam pipe, and showed that the presence of water in the steam required more oil for lubrication.

Prof. Denton also mentions the fact that, where steam is cut off short, more oil is required than where the cut-off is late. If we could entirely prevent cylinder condensation, the problem of cylinder lubrication would be much simplified; and, if there were no re-evaporation, no more oil would be required with a short cut-off than with a long one.

Some one has claimed that oil is not needed in a cylinder, and as proof of such statement mentions the fact that many engines have been run for years where it was not possible to get oil in the cylinder. It is true that engines were so run, but it is equally true that the friction in the same is very great. This might be illustrated by a homely incident.

On the old style of locomotives they used a plain slide valve for the throttle valve, and, to make these throttle valves work more easily, an oil cup was placed in the dome just over the steam pipe, with a small pipe leading down to the valve. It was the duty of the fireman, before any pressure was raised, to pour some oil down this cup and pipe, which oiled the throttle valve. Should this small oil pipe become knocked one side, the oil would go into the boiler instead of into the steam pipe.

A locomotive was sent to do duty on a branch road, and the engineer, fearing that this oil pipe might have become displaced, would not allow the fireman to put any oil in, for fear that it would go into the boiler and cause foaming.

The fireman had all the switching to do, and was anxious that the throttle should work easier, and one morning he disobeyed orders and poured some oil into the cup. When he started the machine out of the house, he saw that the throttle was all right, but thought he would let the engineer find it out himself. The train was made up and the signal given. The engineer, according to his usual custom, braced his feet, took hold of the handle with

both hands, and pulled with all his strength. The resistance by friction having been nearly all eliminated by the oil, the handle straightened out, and the engineer found himself back in the tender. There were no further arguments on the oil question.

Mr. W. F. Durfee.—The variation in the amount of piston friction may be explained possibly, in some degree, by the varying cylinder condensation due to the varying point of cut-off of the steam. It is a well known fact that steam, as it expands, has a certain amount of it condensed in the cylinder, and if the cut-off varies, the quantity of water resulting from such condensation will vary also in accordance with a certain law. In the case of a vertical engine this water on the down stroke of the engine will be pretty evenly distributed around the circumference of the piston. In a horizontal engine most of the water will lie along the bottom of the cylinder, and the piston is running away, so to speak, from the condensation that takes place on the surface of the cylinder. The piston, except at its bottom, where it bears on the cylinder, gets very little benefit directly from the condensation of the steam on the surface of the cylinder, whereas in a vertical engine, the internal condensation taking place all over the surface of the cylinder, the water on the down stroke runs down and distributes itself evenly on the circumference of the piston. I have known a vertical engine of a large size to run a number of years without any lubricants whatever being applied, and the cylinders and valve faces have remained in very excellent condition—quite as good, and in some cases better than the corresponding parts of horizontal engines in which oil was liberally used an equal length of time. That is a practical point which, to my mind, is in favor, and very much in favor, of the vertical over the horizontal form of engines.

Mr. Thos. S. Crane.—Mr. Durfee has anticipated the remark I was about to make. Nearly all the engines in the country thirty years ago were run without lubrication. A tallow pot was kept on the hot steam chest to keep it fluid, and once in a while the engineer would give a little dash of tallow to the cylinder through a valved oil cup. From 1857 to 1861 many engines were put out without any means of lubrication at all. If desired in the mill where they were operated, the tallow cup would be put on. I have seen those engines taken apart after ten or a dozen years of wear, with the piston rings and the valves in perfect order, without having been lubricated at all. It was claimed that the lubricant corroded the

scraped joints; and it was admitted that a cylinder must always be lubricated, if the practice were commenced.

Mr. J. F. Holloway.—In the discussion in regard to the friction piston packing, it seems to me that a very important element has been overlooked. It is well known there are a great variety of piston packings in the market, and it is claimed by men who have invented packings of various kinds, that the peculiarity of their piston packing is that they dispense with a large amount of the friction. It seems to me that to carry on a discussion in regard to piston packing friction which does not designate the kind of packing used, would be like the play of Hamlet, with Hamlet left out. There are, as I said before, a great variety of packings, some better than others, no doubt; and the amount of friction which is produced by this internal pressure of the ring against the interior surface of the cylinder, varies not so much with the lubrication or the want of it, as with the character of the packing used in the cylinder. It was the practice a few years ago, and is still to a certain extent, to use packing rings, which are set out by springs and set screws in the piston head. I think, in those days, it was the general feeling among engine runners, that whenever there was anything wrong with an engine, the first thing to do was to set out the packing rings, and pretty generally it was done. Whenever a new engineer took hold of an engine, if it did not go to suit him, he would take off the cylinder head and set out the packing. I remember a few years ago we undertook to introduce some of the self-setting packing rings on propeller engines on the lakes. With these upright engines, the engineer had to work pretty lively to keep them from getting on the center, and the complaint was, that the engines moved so easily with this packing in, that they could not handle them. Consequently the steam packing was taken out, and springs and set screws were put in. (Laughter.) Now, unless we take some specific packing, and test it, we cannot discuss the subject of lubrication intelligently.

Prof. Jas. E. Denton.—I am familiar with the fact that engines have been run without cylinder lubrication in many instances in the past. I have in mind a 10 H. P. plain side valve engine which ran ten years without cylinder oil, at 60 lbs. boiler pressure, at about the period mentioned by Mr. Crane.

The Sellers firm advise the running of their steam hammers without cylinder lubrication.

A majority of the tug boats now belonging to the Pennsylvania

R. R., and plying between New York and New Brunswick, used no oil in their cylinders for several years without damage. I have not however been able to find in any of these instances conclusive evidences that there is not a considerable increase in the friction of the sliding surfaces in the cylinder and steam chest whenever a lubricant is dispensed with.

Such increase of friction may not be distinguishable in many kinds of engines. Thus the 10 H. P. engine mentioned above was so strongly built and its smooth running of so little importance, that the valve might have offered 50% increased resistance and not attracted notice. The Sellers steam hammers have no unbalanced valve to show increased labor on a valve stem if the friction increases, and the same was the case with the tug boats. Those of the latter having unbalanced slide valves could not be run without oil, and Messrs. Sellers do not attempt to run their slide valve engines without oil. Again, take a stoutly built direct-acting pump; they are often run without cylinder oil, and apparently do as well as with a lubricant. But if a pump with a steam-thrown slide valve is run at its maximum speed as an air pump, the use of a cylinder lubricant largely affects the speed with which the valve can be made to move back and forth, and the speed of the piston of the pump is affected proportionally. Now, a similar effect, which evidently is caused by a reduction of friction, is produced by oil on the steam valve of any pump, but as the speed of the pump is controlled by the resistance of the water or by the throttle, we have no means of *knowing* that the valve works harder without oil. I ceased using oil in the cylinder of a modern high speed engine, having a partially balanced slide valve, driven by two eccentrics with a considerable number of intermediate connections. At the end of three weeks, no cutting had occurred in the cylinder or valve seats, all surfaces being highly polished in fact, but the valve gear ran very noisily. So much "clanking" occurred in its joints that it could be heard in the next room. On re-applying oil, drop by drop, the "clanking" ceased entirely at the 40th drop, but would return after about 3½ hours of running if only 40 drops were fed. This behavior repeated itself over a period of several weeks, and was made the means of comparing the difference of lubricating value of several cylinder lubricants.

If this engine had been of less delicate valve gear, or one in which more or less noise went unnoticed, it would not have been

noted that the absence of cylinder lubricant made any difference in valve friction. My belief is, therefore, that absence of cylinder lubricant creates increased friction, which results in increased wear, but that there is not always the means of making ourselves aware of the existence of the increased friction. I think the general tendency of practice is to use but a few pounds tension in cylinder packing rings, and therefore it is rarely that the increase of friction of a piston can make itself known until the cylinder is opened. But many engines with unbalanced valves could not be operated at all without a cylinder lubricant, and their behavior gives unmistakable evidence of any increase of friction. In a locomotive, for instance, whenever the reverse lever is unnotched and held by the hand, the latter becomes a fulcrum through which the resistance of the slide valve must act, and any increase of friction of the valve is thereby made apparent to the engineer at once. I gradually reduced the feed of oil to the cylinder of a 16 × 24 locomotive, with an unbalanced slide valve of 80 square inches area, running 100 miles with each successive reduction of feed. When the rate of feeding became equivalent to about 250 miles to the pint, 27 miles of running so increased the friction of the valve that one man could not hold the reverse lever steady enough to set it to a particular notch, whereas with oil fed at the rate of a pint to 150 miles, the lever could be managed with one hand. The record of the apparatus herein presented, in showing greater friction as the oil used is less in amount, is therefore thoroughly in accord with practical observation.

Regarding difference in types of packing rings, I incline to the belief that for equal tension there is not so great a difference as is often claimed, but the ring which has been thus far used in the apparatus is certainly one that is becoming very general. I admit, however, that attention should be paid to different forms in planning further experiments. Mr. Schuhmann's point regarding the interference of the upper and lower rings is a sound one, and it is intended to learn the effect of running one of these rings. The relative effect of the different amounts of oil, is however, probably independent of this change.

Mr. Crane cites an instance where apparently excessive moisture in the steam gave results opposed to my finding, wherein the introduction of wet steam greatly reduced the friction. He does not provide data to determine whether there was undoubted increase of *friction* in the cylinder and steam chest. What he

describes as "bad lubrication" may have meant "groaning" or some slight noise, often constituting the engineer's measure of lubricating value, but which is not necessarily indicative of a change of friction, which was the element measured in my apparatus. But assuming that no such distinction holds, I can only account for his results, by conceiving that the wetness of his steam, in the case of the uncovered pipe, interfered with the uniform distribution of the cylinder lubricant.

The latter would tend to concentrate itself in the liquid portion of the inflowing steam, and this action in the case of triple expansion engines running "light" under throttle (so that the steam entering the third cylinder is largely condensed) has been known to interfere seriously with the lubrication of the intermediate and low cylinders, when no difficulty was experienced with the high cylinder. I do not suppose that the amount of moisture in Mr. Crane's case approximated in degree to that used in my experiment, so that the lubrication still depended mainly upon the oil. It is only when the amount of moisture becomes so excessive that the oil is no longer the principal liquid in the cylinder that the results obtained in my own experiment would apply. I have met very contradictory opinions amongst engineers regarding the influence of moisture upon cylinder lubrication. To settle the question experiments should be made with superheated steam and with steam of various degrees of moisture, and it is hoped that this may be undertaken in the future use of the apparatus under notice.

CCCXXVIII.

"OVERHAULING" OF A MECHANICAL POWER.

BY J. BURKITT WEBB, HOBOKEN, N. J.
(Member of the Society.)

In Professor Ball's "Experimental Mechanics," page 118, the following statement is made:

"The principle which we have here established* extends to other mechanical powers, and may be stated generally. Whenever rather more than half of the applied energy is uselessly consumed by friction, the load will remain suspended without overhauling."

It might also be inferred that the converse of this statement would be true and that, to prevent overhauling, more than half of the applied energy must be wasted in friction. In fact the converse statement is the one most needed, so that we may know how to

Fig. 80.

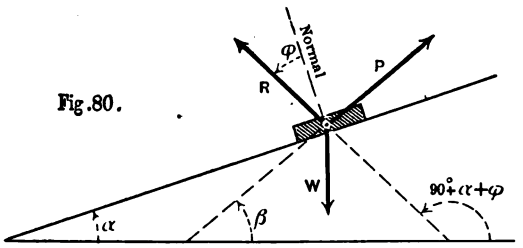

make a non-overhauling "power" which will waste the minimum amount of energy in friction.†

I propose to show that there is no such law as that proposed by Professor Ball, or its converse.

To show the fallacy of the statement we will examine one of the simplest of the mechanical powers,—the inclined plane.

Fig. 80 shows the relations existing between the weight, power and reaction of the plane when the weight is being pulled up the plane. The weight necessarily acts downwards, while the reaction

* With respect to a differential pulley block.

† The converse of the statement is assumed, in other parts of the book, to be true.

makes an angle φ with the normal to the plane such that tan φ = coefficient of friction between the body and the plane. The power may be applied in any direction within certain limits, that is; β may have any value between $-(90°-\alpha-\varphi)$ and 90°. At the lower limit P will be infinite, *i.e.*, it will be impossible to move the weight

Fig. 81.

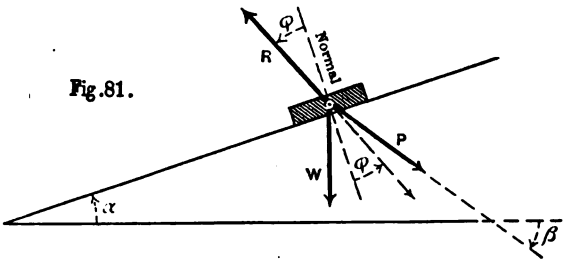

because the value of β is such as to cause all the power to be wasted in friction; at the upper limit $P = W$ and no power is thus wasted. Anywhere inside of these limits the power will cause the body to move up the plane, and we have at once two cases which will serve to test the proposed law and its converse.

Fig. 81 illustrates the first case, the dotted arrow indicating the position of P at its lower limit and the full arrow a position of P inside of this limit and therefore causing motion up the plane. At this lower limit all, and near it nearly all, of the applied energy disappears in friction and yet the "power" will overhaul or not

Fig. 82.

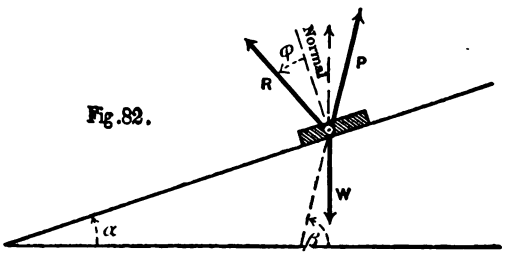

according as we make α greater or less than φ. It is evident, therefore, that the proposed law itself does not hold, and that the amount of applied energy wasted in friction has no connection with the overhauling or non-overhauling property.

Fig. 82 illustrates the second case, the dotted arrow indicating the upper limit for P and the full arrow a position causing motion up the plane. At this upper limit none of the applied energy is wasted

in friction, and near it but little is so wasted, and yet overhauling and non-overhauling are dependent upon the value of α, just as in the previous case. It is evident, therefore, that the converse of the proposed law is equally false, and that overhauling may be prevented without any such waste of applied energy.

We will now examine the law governing the loss of energy by friction.

If we assume that P is applied parallel to the plane, or that $\beta = \alpha$, we create a case, it is true, where non-overhauling depends upon the lost energy being more than half of that applied, but this is so only because we have assumed P to be so applied as not to affect the amount of friction between the body and the plane, or, because by making $\beta = \alpha$ we have made the lost energy, which depends naturally upon β, to depend also upon α.

Fig. 83.

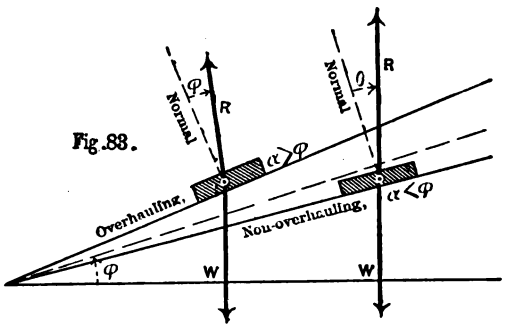

Were this direction of P the most economical the proposed law might, perhaps, be saved by conditioning it to apply to this direction of P as the direction to be adhered to in practice, but less energy will be lost and the apparatus will be otherwise improved if β be made somewhat greater than α, or, as we shall show, greater than $\alpha + \varphi$. We shall, therefore, dismiss the proposed law from further consideration and examine the relation between β, P and the lost energy.

Fig. 83 illustrates the cases of an inclined plane, overhauling or non-overhauling according to the value of α. The figure is drawn with P removed because the conditions of overhauling and the reverse are conditions occurring when P is absent. In the case of overhauling the reaction R will make an angle φ with the up-hill side of the normal, but, φ being less than α, this will leave R on the down-hill side of the vertical, and thus W and R together will

have a resultant to move the body down the plane. In the other case the angle of R with the normal will be $\theta < \varphi$ on account of the fact that there will only be as much friction as the tendency

Fig. 84.

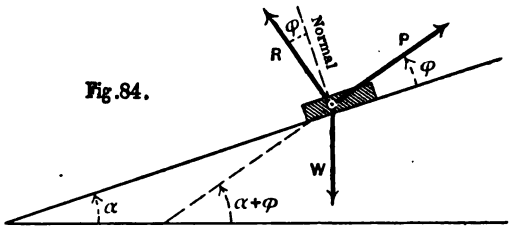

down the plane produced by W, and the exact counterbalance of this tendency by the friction will leave R exactly vertical and equal to W, so that the resultant of W and R will be zero and the body will be at rest.

The equilibrium between the forces (see Fig. 80) is expressed by the two equations

$$- W + P \sin \beta + R \cos (\alpha + \varphi) = 0,$$
$$P \cos \beta - R \sin (\alpha + \varphi) = 0,$$

which by the elimination of R becomes

$$W \sin (\alpha + \varphi) = P [\sin \beta \sin (\alpha + \varphi) + \cos \beta \cos (\alpha + \varphi)]$$

or

$$\frac{W}{P} = \sin \beta + \cos \beta \operatorname{cotan} (\alpha + \varphi).$$

If now we desire to know that value of β which will make P the least possible, we seek the value which makes $W \div P$ a maximum, thus:

$$\frac{d\left(\frac{W}{P}\right)}{d\beta} = \cos \beta - \operatorname{cotan} (\alpha + \varphi) \sin \beta = 0,$$

or

$$\operatorname{cotan} \beta = (\operatorname{cotan} \alpha + \varphi), \text{ which gives}$$

$$\beta = (\alpha + \varphi);$$

that is to say, in order to have P the least possible, we must pull at an angle φ above the plane, as shown in Fig. 84, and this will, therefore, be the best direction if it is desired to have P as small as it can be made.

If, however, it be desirable to consider also the lost energy, then we have only to remember that this decreases with the increase of β, as already indicated, so that by making β somewhat greater than $\alpha + \varphi$ we may reduce the lost energy still further without

seriously increasing P, and thus attain the best practical direction for the pull.

Dr. Coleman Sellers, of Stevens Institute, in a lecture delivered before the last Senior class, called attention to the failure of this proposed law for a train of wheel work, but I am not aware of any proof having been given before this that there is no such general law as that proposed, except that in an article by myself before the last meeting of the A. A. A. S. a lever with a large pivot was described, to which the proposed law will not apply.

APPENDIX.*

To make the foregoing paper more conclusive, if possible, I have calculated the lost energy in certain definite cases of the inclined plane and also in the case of a windlass, which embodies the principle of a lever with a large pivot, described in my paper at the

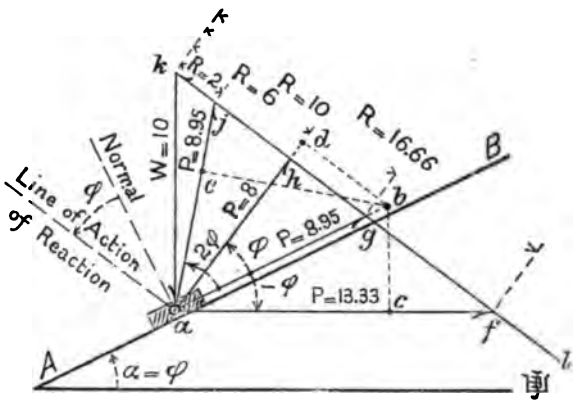

FIG. 97.

last meeting of the A. A. A. S. Models have also been constructed, by means of which the calculations have been verified and the falsity of the proposed law experimentally demonstrated.

* Added since the meeting. This appendix is intended principally as a reply to some of the objections made to the paper by Sir Robert Stawell Ball, Astronomer Royal of Ireland. These objections were inclosed in a letter to me and contributed as a part of the discussion upon the paper, where they are to be found. To make the paper more complete, part of my reply to these objections is put in this form of an appendix; the rest appears in proper place closing the discussion.

Fig. 97 represents the case of motion up a plane when the coefficient of friction is one half, and the angle of elevation just great enough to make the weight border upon overhauling. The vertical arrow *ka* represents the weight W of 10 lbs., and we know also the line of action of the reaction R of the plane, which must make an angle with the left, or down-hill side, of the normal equal to φ, the angle of repose, whose tangent is the coefficient of friction. From *k* draw the indefinite line *kl* parallel to this line of action and complete the triangle of forces by drawing the power P in any desired direction, as *af*, *ag*, *ah*, *aj*; the figure shows four such triangles—*afk*, *agk*, *ahk*, *ajk*—whose sides represent the various values of P and R for the weight of 10 lbs.

Suppose now the weight to move up the plane a distance $ab = 10$; if P is parallel to the plane it moves over the same distance; and for other directions of P the distances *ac*, *ad*, *ae*, moved over are found by dropping from *b* the perpendiculars *bc*, *bd*, *be*, upon the lines of action of P.

The lengths of these lines being measured or calculated, the following results are obtained for the angle of elevation α = angle of repose, $\varphi = \tan^{-1} .5 = \sin^{-1} .447$, and a weight $W = 10$ moving up over a distance 10.

Vertical distance passed over by $W = 4.47$.
Work done lifting $W = 10 \times 4.47 = 44.7$.

When P is horizontal:

$P = af = 13.33$ and moves over $ac = 8.95$.
Work done by $P = 13.33 \times 8.95 = 119.3$.
Work wasted in friction $= 119.3 - 44.7 = 74.6$.
Per cent. of applied energy wasted $= 62.5$.
Velocity ratio $= 2$. Mechanical efficiency $= .75$.

When P is parallel to the plane:

$P = ag = 8.95$, and moves over $ab = 10$.
Work done by $P = 8.95 \times 10 = 89.5$.
Work wasted in friction $= 89.5 - 44.7 = 44.8$.
Per cent. of applied energy wasted $= 50$.
Velocity ratio $= 2.24$. Mechanical efficiency $= 1.12$.

When P is φ above the plane:

$P = ah = 8$, and moves over $ad = 8.95$.
Work done by $P = 8 \times 8.95 = 71.6$.
Work wasted in friction $= 71.6 - 44.7 = 26.9$.

Per cent. of applied energy wasted = 37.5.
Velocity ratio = 2. Mechanical efficiency = 1.25.

When P is 2 φ above the plane:

$P = aj = 8.95$, and moves over $ae = 6$.
Work done by $P = 8.95 \times 6 = 53.7$.
Work wasted in friction $= 53.7 - 44.7 = 9$.
Per cent. of applied energy wasted = 16.7.
Velocity ratio = 1.34. Mechanical efficiency = 1.12.

Corresponding calculations have been made for a coefficient friction = .375, with results to be given presently, and an exp

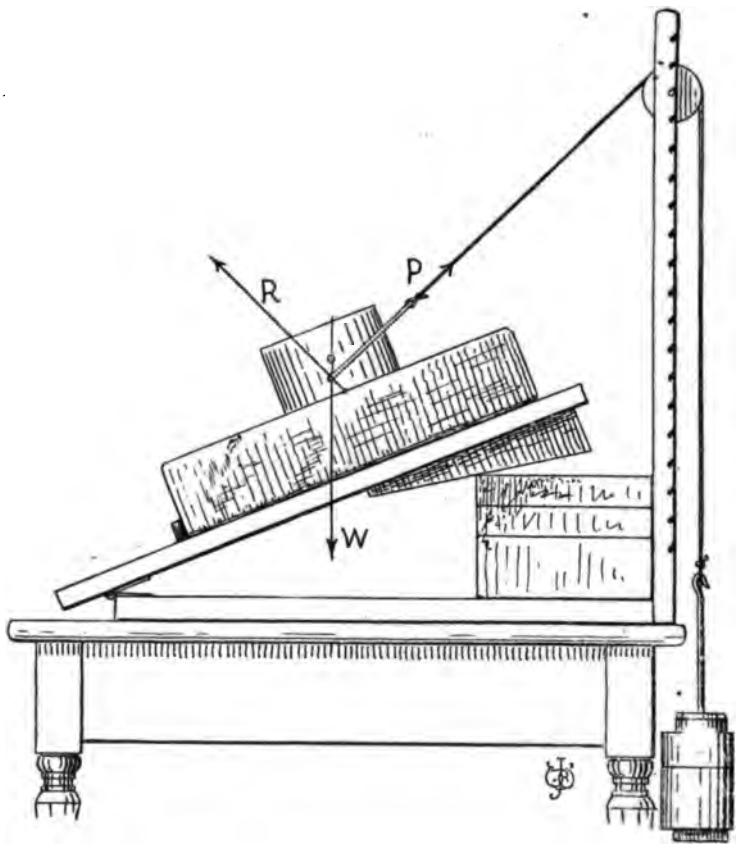

FIG. 98.

mental verification thereof has been obtained by means of model illustrated in Fig. 98. To obtain the desired coefficient

friction an iron weight sliding upon brick is used, and to secure a uniform pressure between the weight and the brick the point of application of P is at the intersection of the vertical through the center of gravity of W with the reaction R, drawn through the center of the lower surface of W. The direction of P can be varied somewhat by experimenting upon different parts of the plane, or it can be changed by placing the pulley in any one of a number of grooves in the upright support.

The following are the results for the angle of elevation α = angle of repose, $\varphi = \tan^{-1} .375 = \sin^{-1} .35$, and a weight $W = 2.17$ lbs. moving up over a distance of one inch.

Vertical distance passed over by $W = .35$.

Work of lifting $W = 2.17 \times .35 = .76$ inch-lbs.

When P is horizontal:

$P = 1.90$ moving over .94.

Work done by $P = 1.90 \times .94 = 1.78$ inch-lbs.

Work wasted in friction $= 1.78 - .76 = 1.02$.

Per cent. of applied energy wasted $= 57$.

Velocity ratio $= 2.66$. Mechanical efficiency $= 1.14$.

Experiment gives:

$P = 1.95$. Per cent. 58. Mechanical efficiency $= 1.11$.

When P is parallel to the plane:

$P = 1.53$ moving over 1.00.

Work done by $P = 1.53 \times 1.00 = 1.53$ inch-lbs.

Work wasted in friction $= 1.53 - .76 = .77$.

Per cent. of applied energy wasted $= 50$.

Velocity ratio $= 2.84$. Mechanical efficiency $= 1.42$.

Experiment gives:

$P = 1.64$. Per cent. $= 53$. Mechanical efficiency $= 1.32$.

When P is φ above the plane:

$P = 1.43$ moving over .94.

Work done by $P = 1.43 \times .94 = 1.34$.

Work wasted in friction $= 1.34 - .76 = .58$.

Per cent. of applied energy wasted $= 43$.

Velocity ratio $= 1.07$. Mechanical efficiency $= 1.52$.

Experiment gives:

$P = 1.54$. Per cent. $= 47$. Mechanical efficiency $= 1.41$.

When P is 2φ above the plane:

$P = 1.53$ moving over .75.

Work done by $P = 1.53 \times .75 = 1.15$.

Work wasted in friction $= 1.15 - .76 = .39$.

Per cent. of applied energy wasted $= 34$.

Velocity ratio $= 2.14$. Mechanical efficiency $= 1.42$.

Experiment gives:

$P = 1.64$. Per cent. $= 38$. Mechanical efficiency $= 1.32$.

In the above tables the values of the reaction of the plane have not been included, inasmuch as they are, of course, proportional to the wasted work, of which the reaction is the direct cause. The reactions in the first case are, however, given in the figure so that they may be compared with the wasted work in the table. Of course there has been no attempt to obtain experimental results agreeing exactly with those of theory; such work would be time wasted so far as this discussion is concerned. Evidently a single instance of a non-overhauling mechanical power, wasting less than fifty per cent. in friction, is sufficient to disprove the proposed law; in making the models and experiments, it was therefore more important to allow everywhere a margin in favor of the law, and to obtain a conclusive disproof thereof in spite of the allowances, than to run any risk of leaning the other way for the sake of getting results nearer to those of calculation.

It is to be noted that the velocity ratio is a maximum when P is parallel to the plane and is the same for any two directions of P at equal angles above and below the plane, while the mechanical efficiency is a maximum when P is at an angle φ above the plane and is the same for any two directions at equal angles above and below this direction. The greatest efficiency does not, therefore, correspond with the greatest velocity ratio; in fact the maximum velocity ratio has no greater mechanical efficiency than the smallest ratio given, so that the latter has the decided advantage, because mechanical efficiency is the desirable thing in raising weights, while usually a large velocity ratio is intrinsically a disadvantage, submitted to only to get the efficiency.

It is easy to obtain a general expression, both analytical and graphical, for the per cent. lost in friction.

If W and R be resolved into components parallel and perpendicular to the plane the former alone appear in the equations of energy, there being no motion in the direction of the latter. In

Fig. 99, $ka = W$ and lk or $l'k = R$, while al or $al' = P$. kk' being normal to the plane, ma and km are the two components of W, and lp and pk those of R. (It would be cumbersome to continue the demonstration for both cases when, evidently, all that is proved when P makes an angle $= \theta$ with the plane can easily be duplicated for P at an angle $= -\theta$ therewith.) Suppose now P to be divided into two parts at n, then the components of the first part

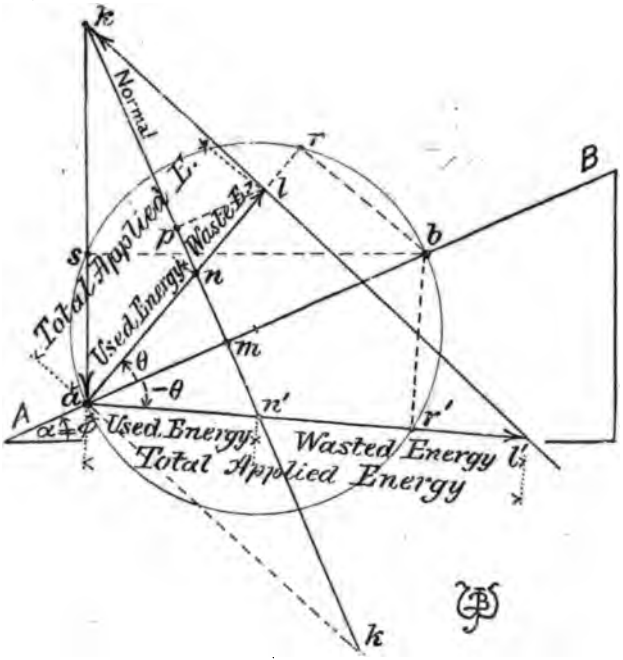

FIG. 99.

are am and mn and of the second, pl and np; the component am is equal and opposite to, and therefore balances, the component ma of the weight, while pl balances lp of the reaction; consequently am performs the useful work of raising the weight and pl the useless work of overcoming the friction. The following proportion must therefore be true:

$$\text{Used energy} : \text{wasted energy} = am : pl = an : nl,$$

and by composition

$$\text{Total applied energy} : \text{wasted energy} = an + nl : nl = al : nl.$$

Consequently,

$$\frac{\text{Wasted energy}}{\text{Total applied energy}} = \frac{nl}{al}.$$

Therefore, if al be taken to represent one hundred per cent. of applied energy, nl will represent the per cent. wasted and an the per cent. used.

The graphical expression for the wasted energy is found, therefore, in the division of the line al by the point n.

Produce, now, km to k', so that $mk' = km$, and draw ak'. The triangles nlk and nak' being similar and ak being equal to ak',

or
$$lk : ak' = nl : na,$$
$$lk : ak = nl : na,$$

so that, as has been shown already,

$$R : W = \text{wasted energy : used energy.}$$

The analytical expression follows easily, thus:
By the similar triangles:

$$kn : k'n = nl : na = \text{wasted energy : used energy,}$$

therefore by composition,

$$\frac{\text{Wasted energy}}{\text{Total applied energy}} = \frac{kn}{kn + k'n} = \frac{kn}{kk'} = \frac{km - mn}{2km}$$

or, expressed in per cent.,

$$\frac{\text{Per cent. wasted}}{100} = \frac{km - mn}{2km};$$

$$\text{therefore Per cent. wasted} = 50 - 50\,\frac{mn}{km}.$$

But
$$mn = am \tan \theta$$
and
$$am = km \tan \varphi,$$
therefore
$$mn = km \tan \varphi \tan \theta$$
and
$$\text{Per cent. wasted} = 50 - 50 \tan \varphi \tan \theta.$$

This expression shows clearly the symmetry of the wasted energy about the direction of the plane, *i. e.*, if $50 - x$ is the per cent. wasted when P pulls along al, then $50 + x$ will be wasted when P pulls along al', al and al' making with AB the angles θ and $-\theta$ and P having therefore the same velocity ratio in both cases. Of the two directions al is evidently to be preferred.

The velocity ratio, also symmetrical about AB, may be included in the diagram by drawing a circle on ab as a diameter; ab being the distance moved by the weight, as is the distance the weight

rises, while ar or ar' is that passed over by the power, the distances being equal for equal numerical values of θ, and having the value

$$\text{Distance} = ab \cos \theta.$$

Also;

$$\text{Vel. ratio} = \frac{ar \text{ or } ar'}{as}.$$

With regard to the direction in which P is a minimum, and which is shown in the paper to be when $\theta = \varphi$, see also Moseley's Engineering and Architecture under the head "Direction of Least Traction," to be found in the New York edition of 1886, by Wiley & Son, on page 315.

The model embodying the lever with a large pivot as explained to the A. A. A. S. is shown in Fig. 100 in plan and elevation, with a special end elevation of the friction journal. A is the base, to which are attached upright pieces for supporting the windlass $BCDe$, where B is the power wheel and C the wheel on which the cord supporting the weight W is wound, also D is a large journal and e a journal so small that its friction may be neglected. The power is applied upward at a, but for convenience the cord is turned downward over the pulley Q, so that weights may be used to produce the power.

P is applied at a radius of three and three-quarter inches and W at three-quarters, so that the velocity ratio is 5. The large journal D is five inches in diameter, so that, with a coefficient of friction sufficiently large to throw the bearing point, where the journal bears against its journal box, three-quarters of an inch to one side of the lowest point, this mechanical power becomes non-overhauling.

Fig. 101 represents a journal in its box, which latter is necessarily somewhat larger than the journal. The weight of the journal and parts supported by it force it down against the lower side of the box. When the journal is not running it rests against the box at the point I, directly under the center, *i. e.*, it bears against the box over a small amount of surface of which I is the center. When the journal commences to turn in the direction of the arrow, it commences to roll on the bottom of the box and rolls up-hill from I toward G until the box gets so steep that it can roll no higher, when it commences to slip down-hill. G is the point at which these actions balance each other, *i. e.*, G is the point at which the journal rests and at which the slope of the box is such that the

journal slips down-hill as fast as it rolls up. Drawing the tangent to the journal at G we have a representation of the inclined plane on which this rolling and slipping action takes place and the radius GO being normal thereto we have the angle GOI = inclination of

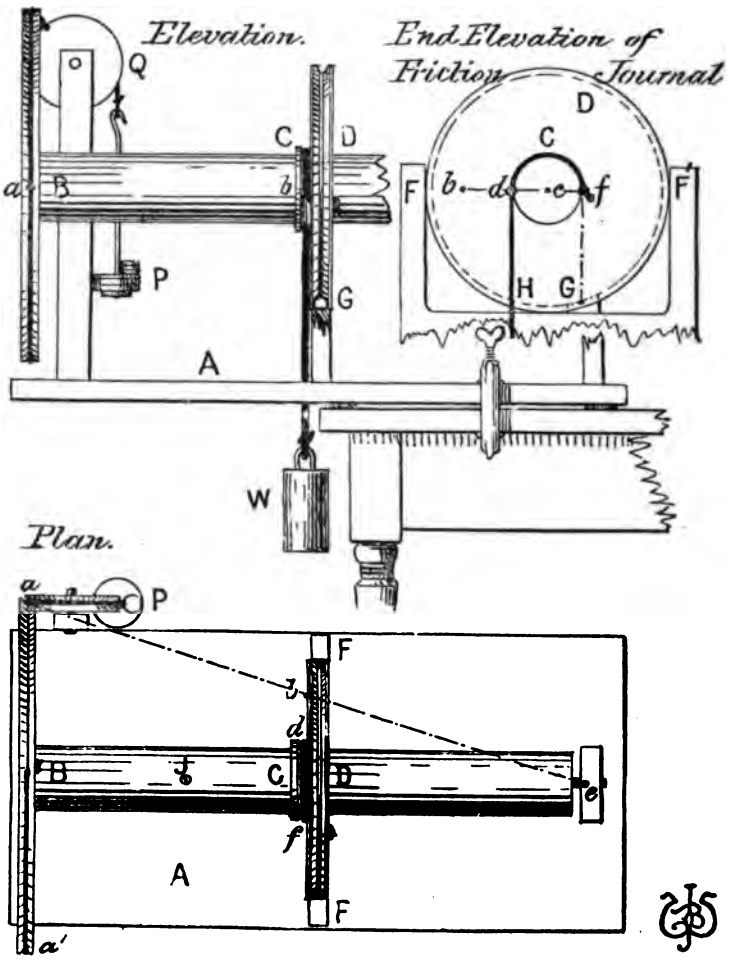

FIG. 100.

the plane and therefore = friction angle, or angle of repose. Of course if the direction of rotation be reversed the point of support shifts from G to H; this fact and the relation of G and H to the coefficient of friction have an important bearing upon the action of the model.

To produce non-overhauling in the model, $IH = IG$ must at least be equal to the three-quarters of an inch radius upon which the weight acts, if we neglect the weight of the windlass; if, however, we take this weight into consideration $IH = IG$ may be somewhat less. For $IH = IG =$ three-quarters of an inch $GOI = HOI = \sin^{-1}.3$ and the coefficient of friction will be the tangent of this angle. The large journal in the model is constructed with a V-groove in it, which fits a V-shaped projection on the box and thus allows the two to wedge together somewhat. By a proper choice of the angle of this groove any desired coefficient of friction may be obtained. In the model no complete box is formed around the journal, but a V-shaped block is put at the point G and, instead of a similar one to correspond with the point H in Fig. 101 the

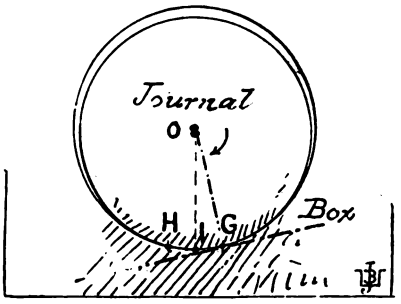

Fig. 101.

check F is employed. When the journal, therefore, attempts to overhaul we have it supported at the two points G and F, whereas when it turns in the other direction the contacts are at G and F' or only at G. The check F' is broken off in the elevation to allow the block G to be seen.

In order, now, to show that fifty per cent. cannot be lost in this model we have only to show that when the journal rests only on G the reaction of the box is less than when it rests on a similar block at H. If it rests at G and F the difference will be still greater.

Draw the dotted line *abe* in the plan, Fig. 100, and regard it as a lever, then P pulling up at a is equivalent to $2P$ acting up at b, midway between a and e; also in the end elevation draw *bdef*, which is also a lever having $be =$ half of aB (in the plan) $=$ half of fifteen quarter-inches $=$ fifteen eighths of an inch and $de = ef =$

three-quarters = six-eighths of an inch. The power $2P$ is applied at b and the weight at d, while the fulcrum is at f over the point G. This lever is shown in Fig. 102, and explains the whole action of the model. When the power is removed, the weight simply rests at d over H, but when the $2P$ is applied at b, and the support shifts to f, over G, we have a lever with a reaction at the fulcrum $f = 1\frac{1}{2} P$, as is readily seen from the equation of moments $R \times 12 = 2P \times 9$, having the origin of moments at d.

Assuming now the weight = 10 lbs., we must have $2P + 1\frac{1}{2} P = W = 10$, or $P = 2.86$ lbs. P moves over 5 feet while W rises one foot, so that 14.3 foot-pounds must be expended with a useful effect of 10, or with a loss of only 30 per cent.

If the pressure in shifting from H to G remained the same, or

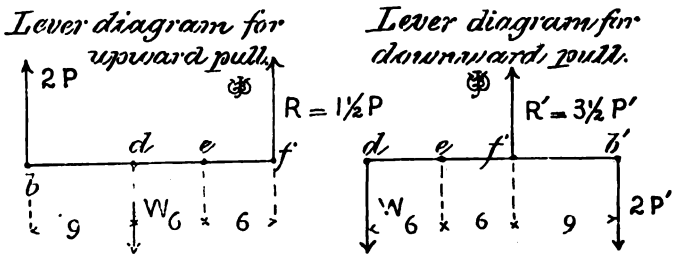

Fig. 102. Fig. 103.

increased, the loss would be equal to or greater than 50 per cent. This is illustrated in Fig. 103, which would take the place of Fig. 102, were the power to be applied downward at a'. In this figure the leverage is such as to make $R = 2.33\,W$ and $P = .67\,W$, thus causing a loss of 70 per cent. of the applied energy when the power is applied at the uneconomical point a'. A comparison of the two cases shows that the loss is 50 ± 20 per cent., according to whether the power acts with or against the weight.

So far we have supposed the friction journal and the weight to be both midway between B and e, and no allowance has been made for the weight of the windlass; we will now be more exact, which can be done by means of a system of leverages similar to that employed in Fig. 100 or by another method, which is embodied in Fig. 104. This figure is also a diagram of used and wasted energies.

Fig. 104 is a horizontal projection of the main lines of the model shown in Fig. 100, and the same letters are used as far as practicable. The center of gravity of the windlass being at J and the weight

applied at d, K will be the common center of gravity, and the bearing point H of the friction journal must be beneath the line nn', drawn through K and e, if the windlass is to be non-overhauling. The journal e will still be regarded as frictionless. Through e and G, the bearing point of the friction journal when the weight is being raised, draw the moment axis mm'; as e and G are the only points of support for the windlass this line is evidently the

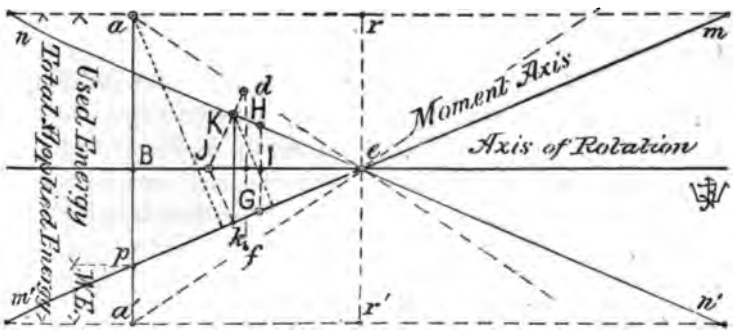

Fig 104.

axis with respect to which the leverages of the power and weight must be reckoned.

Putting w for the weight of the windlass, $W + w$ will act downward at K and must have a moment about this axis equal to that of P acting upward at a. The lever arms of $W + w$ and P are the dotted perpendiculars let fall from K and a upon this axis, but as they are proportional respectively to Kk and ap these lines may be used instead of the perpendiculars in forming the equation of moments. This equation is

$$(W + w)\, Kk = P\ ap.$$

The total applied energy for one revolution is

$$T.\,A.\,E. = P\,\pi\, aa',$$

and the used energy is

$$U.\,E. = W\,\pi\, df = (W + w)\,\pi\, Kk.$$

This last equation becomes evident by noticing that, as K is the common center of gravity,

$$W\,dJ = (W + w)\,KJ.$$

Eliminating W by means of the equation of moments, the expression for the used energy becomes

$$U.E. = P\pi\, ap.$$

Subtracting this from the total energy, there remains for the amount wasted in friction,

$$W.E. = P\,\pi\, aa' - P\pi\, ap = P\pi\, pa'.$$

Comparing these expressions it is evident that if we take the diameter aa' of the power pulley to represent the total 100 per cent. of applied energy then the segments ap and pa', into which it is cut by the moment axis, will correctly represent the percentages of used and wasted energy, and the segment corresponding to the used energy will be that one at the end of which the power is applied.

It follows therefore that, with the power at a, pa', the wasted energy, is less than fifty per cent., while with the power applied downward at a' that wasted would be ap and more than fifty. Further with the power applied upward at n, or downward at n', none would be wasted, while if applied downward at m' or upward at m all would be lost, *i. e.* the power, no matter how great, would simply cause the journal to bear with more or less pressure at G without producing any motion of the weight. Finally, with the power at r or r', fifty per cent. of the energy would be wasted.

This model is instructive inasmuch as it shows no connection between the velocity ratio $aa' \div df$ and the percentage of energy wasted, that ratio remaining the same for all positions of the power pulley from nm' to mn'. Conversely also, the efficiency may be retained constant while the velocity ratio is changed. Thus, if the power pulley be changed not only in position but also in diameter, and so that the latter is always contained between the lines ea and ea', the velocity ratio will be changed without changing the percentage of energy wasted.

Experiments upon the model show that when the friction is such as to make it non-overhauling, a power of 1.55 lbs. will raise a weight of 5 lbs., the velocity ratio being 5 but one pound is needed to raise the weight and the remaining .55 lb. is necessary to overcome the friction, so that the percentage of lost energy is $100 \times .55 \div 1.55 \quad 35+$. A diagram, similar to Fig. 104 has been drawn with as good measurements as can be made from the

model, which is of wood, and it shows that about 30 per cent. should be lost.

DISCUSSION.

Mr. Oberlin Smith.—Mr. President: I would say, in connection with this subject, that two or three years ago I made sketches of a device embodying this idea applied to a crane, which I showed to some of my friends, but I never actually built anything exactly on this principle. My idea was to make a very small pinion, having as few teeth as possible, driving a large gear on the drum shaft, and then put very large journals, so that the shaft should be a good many times larger in diameter at the journals than the pinion itself. This, I thought, would work just as a worm gear does, stand wherever it was put and not "overhaul," as Professor Ball terms it. But on studying it a little, I found that it might have just the same features as worm gear in regard to power wasted in friction, because the journals had to be so very large. It then occurred to me to take advantage of the principle that Professor Webb has explained, of lifting the shaft at the point of greatest friction, by the action of the power against the load. I think if I had put another shaft carrying the crank or pulleys by which the power was applied, so placed as to lift the friction shaft from its bearings, thus making it double-geared, things might be so proportioned and arranged that such lifting would relieve a great deal of the friction, and very likely a practical crane might be made out of it.

Professor Webb.—I would say in reference to this paper that a copy was sent to Professor Ball, but, it being sent rather late, there was not time to get any remarks from him upon the subject. I offered, however, to put into this discussion, when printed, anything that he would send.

In reply to Mr. Smith, I will say that I am no stranger to his powers of invention, having spent many enjoyable hours with him in planning new devices, and I have no doubt he might succeed in making a very good crane upon this principle.

The following communication* has been enclosed in a letter to me, dated Oct. 21, 1888, as a part of the discussion upon this paper:

"NOTE submitted to the 'American Society of Mechanical Engineers,' by Sir ROBERT BALL, Royal Astronomer of Ireland,

* Added since the meeting.

relatively to the paper CCCXXVIII. on the 'Overhauling of a Mechanical Power,' by Mr. J. Burkitt Webb, of Hoboken, N. J.

"I am indebted to the kindness of Mr. J. Burkitt Webb for the privilege of adding a few remarks to his paper, and I return him my thanks for his courtesy.

"Considering that my book on 'Experimental Mechanics' has been largely used by students and teachers for seventeen years (a new edition of it has been placed in my hands this very day) it would indeed have seemed strange that it should have contained a serious blunder which had never been pointed out till Mr. J. Burkitt Webb honored the work by his notice. Of course there is no such blunder. Mr. Webb does not seem to be aware that it is of the essence of A MECHANICAL POWER that the *power employed shall be a small fraction of the load raised.* The instances he gives consist of contrivances in which to raise a small load a gigantic power must often be exerted. If he will have the goodness to consider an inclined plane which is really capable of use as *a mechanical power*, he will find that the principle is verified with all the accuracy of which any statement with regard to friction is capable.

"But I am glad of this incident to take the opportunity of laying before so eminent a body as the American Society of Mechanical Engineers the brief theoretical demonstration of that useful, practical principle in which Mr. Webb does not believe. For the full details of the numerous experiments by which the principle has been practically verified I must refer to my work already mentioned.

"The mechanical powers on which I have experimented may be broadly grouped under three heads. 1st. Those produced by winches or wheel-work; 2d. Those produced by screws in any combination; 3d. Those produced by pulleys of any type.

"I select for discussion here the last-mentioned group. It includes all forms of ordinary blocks as well as the differential pulley, the epicycloidal pulley and many patent hand-hoists and ingenious contrivances in which ropes or chains are used. The following theory comprehends the action of every mechanical power of this kind:

"Let n be the velocity ratio of the machine, *i.e.*, the number of feet through which the power must be moved in order to raise the load one foot.

"Let P be the actual force which it is practically necessary to apply in order to raise a load R.

"To raise R one foot nP units of work are required, and since only R of these units are usefully expended,

$$nP - R$$

units of work must have been expended in overcoming friction.

"Let the power P be removed, then, since the upper block supports a smaller weight, the friction is diminished at that block, though remaining sensibly the same at the lower block, if there should be one. The entire friction is not therefore diminished in a greater ratio than that of R to $P + R$. Hence the number of units of work necessary to overcome friction in the descent of the weight is not less than

$$(nP - R)\frac{R}{P + R}.$$

But by the descent of the load only R units of work can be accomplished, and therefore the block will not overhaul if

$$(nP - R)\frac{R}{P + R} > R,$$

or if

$$nP - R > P + R,$$

or

$$P > \frac{2R}{n - 1}.$$

In the case, for example, of a differential pulley block in which $n = 16$ I found that a power of 46.09 lbs. was required to raise a load of 280 lbs. In this case

$$\frac{2R}{n - 1} = 37.3 \text{ lbs.}$$

and, as this is less than the observed value of P, it follows that the differential pulley block of this type cannot overhaul, a fact that everybody knows. On the other hand if

$$R > nP - R,$$

or

$$P < \frac{2R}{n},$$

the block will certainly overhaul. Take a 3-sheave block in which $n = 6$; I found that for a load of 228 lbs., the power was 56 lbs., but

$$\frac{2R}{n} = 76,$$

a greater quantity than the observed power. We thus account for the familiar fact that any well-made pair of three-sheave pulley blocks will invariably overhaul.

"It is only a different way of stating these results to enunciate them as follows: If the quantity of work usefully employed be less than $50\left(1-\frac{1}{n}\right)$ per cent., the machine will certainly not overhaul. If the quantity of usefully employed work be greater than 50 per cent., the machine certainly will overhaul.

"I must once again inform Mr. Webb and any other critics who have paid me similar attentions that a mechanical power is a contrivance by which a small force is enabled to overcome a large one. That is to say n is always a considerable number, and usually a very large one, in other words $\frac{1}{n}$ is so small that practically speaking the two limits of $50\left(1-\frac{1}{n}\right)$ and 50 respectively draw into coincidence.

"Hence we learn that whether the mechanical power overhauls, or not, substantially depends upon whether more than 50 per cent., or less than 50 per cent., of the applied energy is usefully employed. Similar demonstrations apply to the other mechanical powers.

ROBERT S. BALL.

21 Oct., '88, Observatory, Co. Dublin."

I am glad to be able to present the above communication from the distinguished gentleman whose proposed law has been called in question by my paper. The Astronomer Royal maintains the correctness of the proposed law, but maintains it unfortunately, I believe, inasmuch as the statements and deductions which he makes appear in no way to strengthen his position. Indeed, in view of the eminence and recognized ability of the writer, certain portions of his communication justify the inference that Sir Robert has not fully appreciated the contents of my paper. In these days of excessive printing this may be pardonable, from scarcity of time and absolute confidence in the impregnability of the position he takes, or it may be that my treatment of the subject is too concise or faulty in some way unknown to me. I have therefore added to the paper an Appendix, intended to correct any such defect, and I hope that if Sir Robert will admit the possibil-

ity of my claim, and give the paper his careful further consideration, he may come to a better appreciation of it.

I submit the following remarks upon definite portions of the communication, referring thereto by paragraph and line.

* No one may rightly claim that the length and width of the circulation of a book is a guarantee of its absolute freedom from error, nor that any particular error, to which attention is called, may not exist because it has not been, or is not known to have been, previously pointed out. But this error has been noticed by others; not only did Dr. Sellers allude to it in a lecture to our Senior Class, as stated at the conclusion of the paper, but I am enabled through his courtesy to send to Sir Robert a copy of a lecture delivered by him Nov. 9, 1883, before the Franklin Institute of Philadelphia, and published in the *Journal of the Franklin Institute* for March, 1884. In this lecture occur such passages as these: "Let us now for a moment think how Professor Ball has erred." "He has made a mistake in generalizing from too few experiments." "I do not use this error in Professor Ball's admirable lectures as an example, this evening, with any intention of speaking disparagingly of them." At that time Dr. Sellers thought that if the proposed law were properly restricted to a machine composed of two parts only, and if its converse were modified by a limitation as to cause of non-overhauling, the proposed law might still hold, but since then he has thought of other cases in which it fails, and is now, I believe, thoroughly of the opinion that it lacks a *raison d'être.*

† The restriction of the term "mechanical power" seems to be an unwarrantable one, but it may be passed by as having no bearing upon the correctness of the paper. The term "small fraction" is indefinite, but let any definite value be assigned, below which Sir Robert considers fractions to be small and mechanisms having such velocity ratios to be legitimate mechanical powers, and it will make no difference in the conclusions of the paper, which are briefly these:

First: "*Overhauling*" *and* "*non-overhauling*" *refer to a relation* (a) *between the weight and the parts by which it is partially or wholly supported at a time when the power is absent and its amount, method of application and velocity ratio not necessarily determined.*

* See first part of third paragraph of Sir R. Ball's Note.

† See third paragraph, 7th line of Sir R. Ball's Note.

Second: *The waste of applied energy depends upon another relation* (b) *between the power and the supporting parts at the time when the power is operating, and by varying the way in which the power is applied this relation* (b) *may be changed, without affecting the relation* (a), *so as to make the loss of applied energy greater or less than fifty per cent. at will.*

From which it follows that *an overhauling power may waste more and a non-overhauling power less than fifty per cent. of the applied energy.*

By reference to the paper it will be seen that for the inclined plane the relation (a) is "$\alpha > \varphi$" for overhauling, and for non-overhauling "$\alpha < \varphi$" while the relation (b) is "Per cent. wasted $= 50 \mp 50 \tan \varphi \tan \theta$."

I may at some future time call the attention of the Society to the term "mechanical power," with a view to its more exact definition, if necessary, and the possible division of mechanical powers into classes.

* It is difficult to see how this objection could be made after a careful reading of the paper. The inclined plane there discussed is perfectly general, and consequently must include cases in which the power is much greater than the weight; but it is not confined thereto, and includes equally all cases where the power is less than the weight. The inclined plane of my paper is not only "capable of use" but actually and extensively used as a mechanical power; in fact, whenever an inclined plane is used with an angle about equal to the angle of repose, it is the inclined plane of the paper. I have not discussed, it is true, cases in which α is much smaller than φ because foreign to the purpose of the paper, but in most such cases it is still true that by varying the method of applying the power the waste can be reduced below fifty per cent. A load drawn up a hill by a beast of burden, with a slight margin against overhauling, is a familiar example of the inclined plane of the paper, and the direction of the power usually makes a plus angle with the plane, especially so if the load is supported by small wheels or simply slides.

As, however, the paper itself does not indulge in sufficient detail to make all this at once clear, and as I had some additional matter of interest, there has been added to the paper an Appendix, in which some definite cases of the inclined plane have been worked out in detail and the results verified by experiment with a simple

* See third paragraph, 9th line, *et seq.*, of Sir R. Ball's Note.

model constructed for the purpose. Graphical constructions have also been made to give a maximum clearness to the principles explained. In addition to the examples of the inclined plane, the Appendix describes an ordinary windlass, that is a windlass consisting, like the inclined plane, of two parts only, which embodies the principle of the lever with a large pivot. This is discussed both graphically and numerically, and the results verified by experiment with a model constructed for the purpose. It is needless, perhaps, to add that experiment fully supports the conclusions of the paper.

*As regards the attempted demonstration in the "Note," it claims to be a "theoretical demonstration of the practical principle," but generality is at once sacrificed by the selection for demonstration of one class only, out of three, into which Sir Robert supposes the mechanical powers upon which he has experimented to be divided.

The generality seems still further to be sacrificed in the tenth paragraph, which assumes that the representative power of this class consists of an "upper block" with or without a "lower block." I cannot see how such a simple combination, or lack of combination, can be typical of an entire class defined as "those produced by pulleys of any type." Some of the simplest of this class have no upper blocks, and, generally speaking, in many of them the upper block has nothing to do with the multiplication of the power enabling it to raise a greater weight.

But the demonstration utterly breaks down with the statement: "The entire friction is not therefore diminished in a greater ratio than that of R to $P + R$." In the ordinary case of one upper and one lower block, where the rope starts at the upper block, runs down and around the lower and then over the upper block and down to the power, with the weight hanging from the lower block, and a velocity ratio of two, this is not true, for if the power be removed the friction is evidently diminished in a much greater ratio; in fact with the power removed there is practically no tension on the rope, and consequently almost no friction, so that the weight must fall quite freely. If it be urged that although this example disproves the statement quoted, it nevertheless does not disprove the test for non-overhauling produced as a result of the statement, because by substituting the proper values for this mechanical power there results:

$$P < \frac{2W}{n-1} \quad \text{(when } W \text{ is used instead of Sir Robert's } R.\text{)}$$

* See paragraph four, *et seq.*, of Sir R. Ball's Note.

and if, further, it be claimed that this example supports the proposed law, inasmuch as there is less than fifty per cent. wasted in friction, then it is only necessary to add two more blocks and increase the coefficient of friction to produce a mechanical power

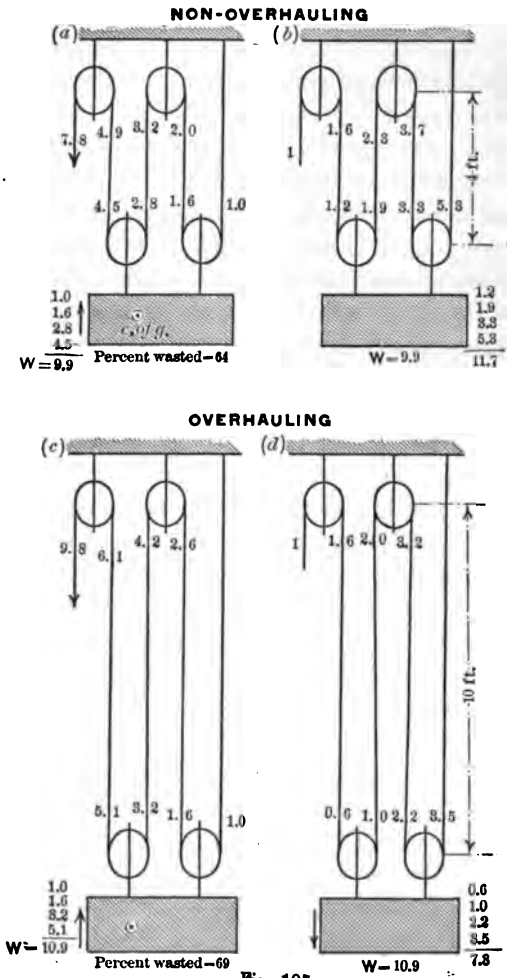

Fig. 105.

which shall disprove both the statement, the test and the law. Such an apparatus is shown in Fig. 105:

The coefficient of friction is, in this figure, supposed to be great enough to cause the tension of the rope to increase sixty per cent. in passing through the block, and the tensions are marked on

each side of each block in lbs. and tenths; such a coefficient can be obtained by enlarging or grooving the journals of the pulleys, or instead of a block with pulleys a simple dead-eye can be used, such as is employed in certain parts of a ship, consisting of a simple block of hard wood with a curved passage through it for the rope to slide in, so that great friction is unavoidable.

The velocity ratio is four, and the weight of the rope is supposed to be one-tenth of a pound per foot. In the two upper figures (*a*) and (*b*), the blocks are supposed to be only four feet apart; (*a*) supposes the weight being raised, while in (*b*) the power is removed to give a chance for overhauling; (*c*) and (*d*) represent the same cases when the blocks are ten feet apart, and illustrate the familiar case of a "block and fall" overhauling when run out beyond a certain length, which does not overhaul inside of such length. The power is supposed to be applied at the ground, ten feet below the upper block, so that its amount is found by subtracting from the tension at this block the weight of the "fall," or the weight of ten feet of rope, therefore in case (*a*) $P = 7.8 - 1 = 6.8$, and in case (*c*) $P = 9.8 - 1 = 8.8$. When the power is removed the weight of the "fall" produces the initial tension of one pound at the upper block, from which the tensions at the other blocks and the work of friction is calculated in cases (*b*) and (*d*). The calculation of the tensions when the weights are being raised is for convenience made by assuming the weight such as to make the lowest tension = one pound.

Now as to the disproof of the statement; take it in the form: "Hence the number of units of work necessary to overcome friction in the descent of the weight is not less than

$$(nP - W)\,\frac{W}{P + W}."$$

In the case (*c*) $P = 8.8$ and $W = 10.9$, and the value of the expression is

$$(4 \times 8.8 - 10.9)\,\frac{10.9}{8.8 + 10.9} = 13.4,$$

whereas in (*d*) the work to overcome friction $= 7.3$ or < 13.4.

While the statement holds for case (*a*) with the power applied near the ground, it will not hold if the "fall" be shortened and the power applied at the upper block, for then $P = 7.8$, and the

value of the expression is 11.9, while the work necessary to overcome friction will be much less than 11.7. This is evident, because 11.7 is calculated from the tension of one pound produced by the ten foot "fall" but with practically no "fall" there will be no initial tension, and consequently a great decrease in the work to overcome friction.

So much for the statement.

Now as to the criterion of non-overhauling: "The block will not overhaul if

$$P > \frac{2W}{n-1}."$$

Substituting the proper values for (*c*) and (*d*) there results:

$$8.8 > \frac{2 \times 10.9}{4-1}, \text{ or}$$

$$8.8 > 7.3,$$

according to which this mechanical power should not overhaul, while the calculation of the tensions shows that it will; consequently the criterion fails.

Finally, the proposed law itself requires that neither (*a*) (*b*) nor (*c*) (*d*) shall overhaul, because in both more than fifty per cent. is wasted in friction, but the overhauling is seen to occur when the blocks are far enough apart, as in (*c*) (*d*), so that the proposed law cannot be accepted. Case (*a*) also becomes overhauling by the removal of the "fall" and the application of the power near the upper block, as above indicated.

* I had intended to pass over for the present the question as to what constitutes a mechanical power, but, lest my arguments be rejected by Sir Robert on the ground that they are based upon contrivances that are not properly mechanical powers, it is necessary to say something as follows:

First. No such restricted definition of a mechanical power as Sir Robert seems inclined to use in defense of the proposed law will for a moment be accepted by engineers or mathematicians.

Second. To say that "*n* is always a considerable number," without specifying a definite value which *n* must exceed, is fatal to any statement involving *n* and intended for a law, because a law is in

* See last paragraph but one in Sir R. Ball's Note.

its very nature a definite thing, and opinions will differ widely as to what is "a considerable number."

Third. Sir Robert cannot urge any such definition without contradicting himself. In the simple three-sheave block, which he discusses in the preceding paragraphs, $n = 6$, so that either 6 must be claimed to be "a considerable number" or a contradiction must be acknowledged. Turning now to his truly valuable book, I find the following upon almost the first page opened to:

"In the present lecture we shall examine into the most important mechanical powers that are produced by the combination of a rope with pulleys.

THE SINGLE MOVEABLE PULLEY.

"188. We commence with the most simple case, that of the single moveable pulley (Fig. 35)."

In this case $n = 2$; now as it cannot be claimed that 2 is "a considerable number," the contradiction is established between the definition attempted in the Note and Sir Robert's book.

Fourth. My arguments are illustrated by but not based upon mechanical powers with small velocity ratios. I have employed such ratios simply for convenience; the principles developed are independent of the ratios, and it has been shown that, without changing the ratios, the per cent. wasted in friction can at will be made greater or less than 50 per cent., and this is true for large as well as small ratios. Thus: In an inclined plane rising one foot in twenty, with a coefficient of friction of one-twentieth and the power at 45° with the horizon, *i.e.*, $\beta = 45°$, $\theta =$ about 42°, $n = 14.8$, and the per cent. wasted in friction = 48, while if the power be depressed to an equal angle below the plane $n = 14.8$ still, but the per cent. rises to 52. Also, if the weight pulley of the windlass be reduced, say, to one-fourth its present size, with a corresponding reduction of the coefficient of friction, the velocity ratio will be increased to $n = 20$ and the loss by friction will rise to 45 per cent. wasted, which may be made 55 per cent. by applying the power at a', without changing n.

But it is unnecessary to consider large values of n. Many of the most useful and widely used mechanical powers have small velocity ratios—ratios of two and even less.

Of course any number of experiments made with mechanical powers arranged so that the application of the power increases the

friction, or at least does not diminish it, may seem to verify the proposed law if the fact be ignored that the power may be so applied as to produce results at variance therewith.

To call further attention to the fact that the distinction between an economical and an uneconomical application of the power is well established, I will conclude with two other references to Moseley, referring to the same edition as quoted in the Appendix to my paper. Both are found on page 178, and are as follows:

"168. A machine to which are applied any two pressures P_1 and P_2, and which is moveable about a cylindrical axis, is worked with the greatest economy of power when the directions of the pressures are parallel, and when they are applied on the same side of the axis, if the weight of the machine itself be so small that its influence in increasing the friction may be neglected."

"169. A machine to which are applied two given pressures, P_1 and P_2, and which is moveable about a cylindrical axis, is worked with the greatest economy of power, the influence of the weight of the machine being taken into account, when the two pressures are applied on the same side of the axis, and when the direction of the moving pressure P_1 is inclined to the vertical at a certain angle which may be determined."

pointing toward the shank. I am convinced that this break is from solid stock, not being caused by an imperfection in the steel.

Mr. W. E. Crane.—The peculiarity of steel shrinking when hardened is valuable in many industries, such as dies for drawing tubes, rivets, etc. When a die becomes worn, it is a simple matter to take it to the blacksmith and have it re-hardened and shrunk. If steel would do this indefinitely, these dies could all be worn out on one size, but there is a limit to the number of times that the same piece of steel will shrink, this number being from five to seven, after which it does not shrink. It is possible that steel might be re-heated and cooled seven or eight times—if it would not be injured—and then the tool ground to size and hardened and retain its size.

Mr. Ezra Fawcett.—We had occasion some time since to make some large taps and dies for bridge bolts, and being in a hurry, the forger in annealing left them in a bed of charred (bituminous) coal on the forge over night, to give them a good "soaking," as he called it. On working the steel, we found it to have a very coarse, crystalline structure and brittle. Needing them immediately, we finished them up, tempered, and put them to work. One of them broke after threading some hundreds of nuts, but did not show as large a crystalline structure as before tempering; the others have been in use ever since. The steel was ordered for the special purpose from a well-known manufacturer in Pittsburgh, and had every appearance of being first class.

Mr. Thomas S. Crane.—I am surprised that no one has alluded to the peculiar formation of the ingots from which high carbon steel is produced, and I will call attention to the fact that all such ingots are defective at one end, and that such defect is embodied in the bar when the ingot is worked up, and is only eliminated by a tedious process of inspection in the mills.

I believe that, with the exception of those breakages which arise in hardening from the peculiar shape of steel articles, most of the flaws and cracks are produced in hardening by the hidden imperfection ordinarily existing in the ingot and afterward preserved in the finished bar.

High carbon steel, used for making tools and for other purposes when hardness is required, shrinks a great deal in cooling, and the ingots, as shown in the illustration (Fig. 89), always have a pipe, P, in the upper end, extending from one-quarter to one-half of its length downward.

the name of the firm, and the man who made the steel. Then would follow the subsequent manipulation to put the steel in shape for use. Even then the mishaps it has met with from bad workmanship will never be known.

Mr. Wm. Kent.—The lowest tensile strength I have ever found in steel was 42,000 pounds per square inch. It was American open-hearth steel, made for horseshoe nails. The composition was about C 0.10, P 0.012, Mn 0.20, Si 0.02. It was necessary to keep the phosphorus extremely low to secure the low tensile strength and great ductility desired.

Some three years ago I procured thirteen samples of watch springs, and tested them for tensile strength in a crude apparatus in which a strong spring balance was used to indicate the strain. The springs included a Jurgensen mainspring, an English, a Waltham, a Waterbury, and several other springs of various sizes and different tempers. The tensile strength of the whole lot of thirteen varied between the limits of 300,000 and 375,000 pounds per square inch, a much less variation than might be expected considering the variety of sizes, tempers, and sources from which they were obtained.

The samples exhibited in connection with this paragraph are trusses for torsion balances, with spring steel wires stretched upon them, and have been under test for some months past in the factory of The Springer Torsion Balance Co. The longest of the three wires on the double truss has been twisted through an angle of forty-five degrees, that is, twenty-two and a half degrees each side of its normal position, 7,100,000 times.

The two shorter wires on the single trusses have been twisted through an angle of sixteen degrees, 2,200,000 times. These wires were stretched originally to the notes C sharp and D above the staff, respectively. After they had been twisted 1,000,000 times each, the tone was tried again, and one of the wires appeared to have a tone half a semitone higher, and the other was about half a semitone lower than when the test was begun—possibly a mistake in the original tuning. After they had been twisted 2,000,000 times each, the tone was found to be the same as it was after 1,000,000 twists.

Mr. Levi K. Fuller.—In 1885, I had occasion to make a series of dies and punches for the Estey Organ Company, to be used in punching sheet brass for reeds, both block and tongue, for use in their organs.

The steel was No. 4, Sanderson Brothers Steel Company, Syracuse, N. Y. The bar was cut into various sizes in a planer, heated in a charcoal fire, and annealed in wood ashes. They were then planed to various sizes and thicknesses, ranging from $\frac{1}{16} \times 1 \times 3$ to $\frac{1}{2} \times 3 \times 3$. These were heated to a bright red, in accordance with the instructions printed upon the label on the bar of steel, and hardened in water and ground without the temper being drawn in the least.

They were then subjected to grinding in an emery grinder to the proper sizes; they were ground on a frame but not confined, remaining loose so as to allow the steel to move, if there were any tendency in that direction. As the skin was removed upon one side, the surface was slightly concaved, and they had to be turned over and ground upon opposite sides five times before they ceased changing their form.

The various blocks were planed .010 thicker than the finished size to allow for grinding. They were ground .0001 of an inch alternately on each side, receiving a total of five grindings upon each side, reducing the total thickness .010 of an inch, as above stated.

After they had been ground a few hours, they began to crack, and nearly every one was ruined by reason of this tendency. In some cases, they would break into a dozen pieces. I had communication with Sanderson Brothers Steel Company, and they attributed the fact to overheating, but the description "a bright red" had been strictly followed, and had been none too high for similar steel for a like use.

Samples of this were sent to Sanderson Brothers and tempered by them, and the temper slightly drawn, but it was not sufficiently hard to do the work. We then resorted to steel No. 5, same make, which had precisely the same treatment as first described, and which has resulted in no case in breakage.

The work performed by the sample returned to us by the Sandersons was the punching of five thousand reeds without regrinding, while the No. 5 will punch twenty thousand, and with some thicknesses even more.

The dies were perfectly square and were set with a piece of tissue paper .0005 in thickness between them, cutting a perfectly smooth edge.

Mr. Chas. L. Huston.—In the discussion at the Nashville meeting, as to the significance of the peculiar curved lines which

appear in the disturbance of the surface scale of steel boiler plates, caused by the strains of shearing, some of the members claimed that it was *only* a *scale* disturbance, and did not indicate any injury to the metal.

I have reason to believe, however, that it is an indication of injury to the body of the metal, and send herewith a piece of plate, which had been so affected, and afterwards was stretched and broken in a testing machine. The lines show very plainly that the metal had been strained beyond its elastic limit, not only upon the surface, but to some depth (as shown on the edges of test piece), so that, when afterwards it was stretched, it did not so readily yield at these points, leaving elevations of slight extent upon the surface.

The lines on this sample are not so much the peculiar curved ones, the result of shearing, as they are those resulting from the curling of the narrow scrap at the shears and the subsequent straightening to prepare for testing.

I have observed, as also have many other workers of steel, that metal of some degree of ductility, when subjected to strains, will sometimes crack like glass, showing no evidence of ductility at the point of fracture. I noticed some five years ago one striking case of a $\frac{5}{8}$ plate of American made basic steel, which was sent to a locomotive works to try its flanging qualities. It was flanged into a locomotive throat sheet, the edges being first turned down and then the concave end worked out.

The next morning a crack appeared at the opposite end *A* (Fig. 106), which had not been heated at all, and had had the roughness of shearing removed by planing. This crack continued to extend for a week or ten days, until it reached the whole way across to the part that had been heated.

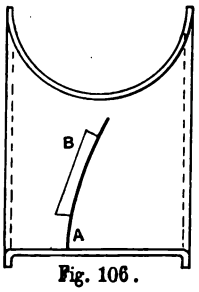

Fig. 106.

This, of course, was due to the contracting strain at the flanged end, and the sides of the crack showed little or no evidences of having reduced or stretched at the fracture.

I had a test piece taken from one side of the crack (as at *B*) and prepared, so that, when pulled, it had the crystalline face of the crack for one edge of the test piece.

The test taken nearly across the grain of rolling showed a tensile strength of 68,580 lbs. per sq. in., and a reduction of area of 42 per cent., with a fibrous fracture. I send one end of this

piece, which, however, is almost too old and rusty to show its character.

Some curious tests made by my father were published in the *Journal of the Franklin Institute.*

One series, 1878, shows that steel and iron both, when raised to about 600° heat Fahrenheit, lose in ductility and gain in tensile strength; this is also corroborated by bending and tensile tests made in Europe and translated for the *Journal of the Franklin Institute* in 1885.

Another set of my father's tests shows the effect of straining iron up to nearly its elastic limit and continuing the strain for twenty-four hours or more, the result being in some cases raising the elastic limit almost to the ultimate strength of the material.

Mr. W. W. Dingee.—In reply to query 66, I will say that the J. I. Case Threshing Machine Co. use large amounts of machinery steel in the manufacture of threshing-cylinder teeth. This steel cannot be hardened with any certainty by any of the usual methods. The chief trouble with it comes from its uneven texture. It is not very uncommon to find a bar which may be broken like cast steel, when within a short distance of the break it can be bent cold.

Mr. Chas. T. Main.—During the year of '83, when rearranging the driving system at Lower Pacific Mills, it was thought that steel shafts for head-lengths would be stronger and more desirable than iron. Accordingly, quite a large number of these, of four and five inches diameter, were put in. The calculated sizes were amply sufficient to carry their respective loads, and the shafts were well supported by hangers near the pulleys, and were firmly held. In less than a year, two five-inch shafts had broken in one place, and one in another place, and four four-inch shafts had broken. These were replaced with forged iron shafts, which were subjected to the same conditions of load, speed, etc., the bearings remaining the same as before. The five-inch shafts are still running under the same conditions. The four-inch are still running, although the conditions have more recently been changed. The other steel head-lengths which did not break were all changed for iron with one exception, which still remains as it was.

Mr. George R. Stetson.—Having taken part in the discussion on steel at the Nashville meeting, and learned through the authority of a member that electro-plating tempered steel is another illustration of the "unexpected which sometimes happens," and hav-

The illustration (Fig. 89) is taken from a photograph of an a ingot, split open to exhibit the extent of the pipe, and it w apparent that the inner sides of the pipe, if exposed to the atmosphere before the ing worked down, become more or less oxidiz that no amount of hammering or rolling wil fectly weld them together.

P

FIG. 89.

When the ingot is worked down into a b any size whatever, the lack of union betwee opposite sides of the pipe forms a flaw or which is quite discernible to the eye when th is broken upon its end; and it is common fo inspector to break foot after foot from the e the bar to remove the injured portion, so th remainder may be sold with confidence as a s article.

It is very evident that a point in the bar be reached where the defect would not be ceptible to the eye, but exist in sufficient d to cause a crack when the metal was ex to any internal strain in hardening.

It is not merely a theoretical conclusion a crack would arise when hardening wher defective union between the sides of the remain, as it would weaken the cohesion c steel at that point;" but it is a matter of co practice in testing samples of steel for defects to break a piece from the end of th and harden it to see if it will crack.

No system of inspection is perfect enou prevent infallibly the existence of such cra the steel, and it appears to me that it is the or pipe in the ingot to which we must trace of the extraordinary cracks which arise at pe and unexpected points in steel articles hardened.

I hope to present a paper at the next me upon the means used to prevent piping in i and have some interesting examples of the d caused by the pipe in the finished bar.

Mr. F. W. Dean.—It is a matter for congratulation that fa

of steel are diminishing, or at all events such astounding failures as the splitting of boilers when under water pressure have not occurred for some time. If this were not so, it would indeed be a thankless task for those engaged in the steel industry to see no response to their efforts to perfect.

While we in this country can feel pride in the results of our efforts to perfect certain kinds of steel, we are lamentably behind in securing good quality to heavy pieces, whether cast or forged. Not having had demands from the Government for gun steel, which doubtless has been a potent factor in Europe in influencing for the better the qualities of forged steel, all processes have been of the most inefficient kind.

As for steel for general purposes, testimony is contradictory. Among railway master mechanics opinion is divided as to the relative merits of steel and iron for axles and crank-pins, while there are hardly any men in opposition to steel for boilers. I suspect the reason for this is partly due to our making better steel for boilers than for other purposes. We, in fact, probably make the best steel boiler plate in the world.

Steel appears to labor under the disadvantage of inertness of accommodation to conditions. It must be humored, and he who succeeds best in ascertaining its peculiar nature, and caters to its weakness of character, becomes the best designer of steel structures. It can be laid down as an axiom that, when it is to be in much stress, steel should be free from sudden changes in size and form. Large fillets should be used, and key-ways should be well rounded at the corners.

It is very satisfactory to know that there are at present several specifications out for locomotive boilers having butt joints and covering plates, the inside one wider than the outside. This is one step toward making American locomotive boilers equal to English. A higher ideal of a boiler is still desirable. The shell must not only be good, but all forgings for braces must be at least respectable. Crown bars for supporting crown sheets should be things of the past, and their places should be taken by stay bolts between parallel plates. It should no longer be possible to find in use a riveting machine with a plate-closing ram, which never fails to make a circular indentation around the rivet. The plate within this ring is nearly useless, because it is bounded by steel which has been mostly strained beyond its elastic limit.

Several years ago a peculiar possible cause of failure of a steel

The illustration (Fig. 89) is taken from a photograph of an a ingot, split open to exhibit the extent of the pipe, and it wi apparent that the inner sides of the pipe, if exposed to the atmosphere before the ing worked down, become more or less oxidize that no amount of hammering or rolling wil fectly weld them together.

P

FIG. 89.

When the ingot is worked down into a b any size whatever, the lack of union betwee opposite sides of the pipe forms a flaw or which is quite discernible to the eye when th is broken upon its end; and it is common fo inspector to break foot after foot from the e the bar to remove the injured portion, so th remainder may be sold with confidence as a s article.

It is very evident that a point in the bar be reached where the defect would not be ceptible to the eye, but exist in sufficient d to cause a crack when the metal was ex to any internal strain in hardening.

It is not merely a theoretical conclusion a crack would arise when hardening wher defective union between the sides of the remain, as it would weaken the cohesion c steel at that point;" but it is a matter of co practice in testing samples of steel for defects to break a piece from the end of th and harden it to see if it will crack.

No system of inspection is perfect enou prevent infallibly the existence of such cra the steel, and it appears to me that it is the or pipe in the ingot to which we must trace of the extraordinary cracks which arise at pe and unexpected points in steel articles hardened.

I hope to present a paper at the next me upon the means used to prevent piping in i and have some interesting examples of the d caused by the pipe in the finished bar.

Mr. F. W. Dean.—It is a matter for congratulation that fa

of steel are diminishing, or at all events such astounding failures as the splitting of boilers when under water pressure have not occurred for some time. If this were not so, it would indeed be a thankless task for those engaged in the steel industry to see no response to their efforts to perfect.

While we in this country can feel pride in the results of our efforts to perfect certain kinds of steel, we are lamentably behind in securing good quality to heavy pieces, whether cast or forged. Not having had demands from the Government for gun steel, which doubtless has been a potent factor in Europe in influencing for the better the qualities of forged steel, all processes have been of the most inefficient kind.

As for steel for general purposes, testimony is contradictory. Among railway master mechanics opinion is divided as to the relative merits of steel and iron for axles and crank-pins, while there are hardly any men in opposition to steel for boilers. I suspect the reason for this is partly due to our making better steel for boilers than for other purposes. We, in fact, probably make the best steel boiler plate in the world.

Steel appears to labor under the disadvantage of inertness of accommodation to conditions. It must be humored, and he who succeeds best in ascertaining its peculiar nature, and caters to its weakness of character, becomes the best designer of steel structures. It can be laid down as an axiom that, when it is to be in much stress, steel should be free from sudden changes in size and form. Large fillets should be used, and key-ways should be well rounded at the corners.

It is very satisfactory to know that there are at present several specifications out for locomotive boilers having butt joints and covering plates, the inside one wider than the outside. This is one step toward making American locomotive boilers equal to English. A higher ideal of a boiler is still desirable. The shell must not only be good, but all forgings for braces must be at least respectable. Crown bars for supporting crown sheets should be things of the past, and their places should be taken by stay bolts between parallel plates. It should no longer be possible to find in use a riveting machine with a plate-closing ram, which never fails to make a circular indentation around the rivet. The plate within this ring is nearly useless, because it is bounded by steel which has been mostly strained beyond its elastic limit.

Several years ago a peculiar possible cause of failure of a steel

boiler joint came under my notice, when doing some experimental work for Mr. Leavitt, to which I have never seen reference. I refer to the effect of a non-axial pull on a joint, of which the following is an account:

A competitive test was being made of steel furnished by two makers for some 90-inch boilers of the locomotive type, having 2,800 square feet of heating surface each. The steel itself was tested and all of its important physical qualities noted, and the remainder of the plates made up into joints. The test pieces were each 34 inches long, 8 inches wide at the ends, and reduced to a finished width of $5\frac{5}{8}$ inches for a mid-length of 24 inches. The qualities of the steel as shown by the Emery testing machine at Watertown, Mass., were as follows:

	Steel A, $\frac{9}{16}''$ Thick.	Steel B, $\frac{9}{16}''$ Thick.
Section of specimen ..	5.61″ × .561″ = 3.147 sq. in.	5.595″ × .568″ = 3.18 sq. in.
Elastic limit....	31,141 lbs. per square inch.	30,191 lbs. per square inch.
Ultimate strength.....	59,056 " " "	62,924 " " "
Elongation in 10 inches	$31\frac{8}{10}$ per cent.	$31\frac{7}{10}$ per cent.
Contraction of area.. .	56 " "	43 " "
Appearance of fracture.	Fine, silky.	Fine, silky.

	Steel A, $\frac{3}{8}''$ Thick.	Steel B, $\frac{3}{8}''$ Thick.
Section of specimen ...	5.615″ × 0.377″ = 2.177 sq. in.	5.605″ × 0.381″ = 2.136 sq. in.
Elastic limit	37,317 lbs. per square inch.	33,708 lbs. per square inch.
Ultimate strength.....	59,669 " " "	63,314 " " "
Elongation in 10 inches	32 per cent.	29 per cent.
Contraction of area ...	52 " "	47 " "
Appearance of fracture	Silky, with minute laminations.	Silky, laminated.
Remarks.....	Very magnetic at fracture.	

Among 12 joints made from these plates was a butt joint of $\frac{9}{16}$ inch. A plate with a $\frac{9}{16}$ inch covering plate on one side and a $\frac{3}{8}$ inch covering plate on the other, the latter extending sufficiently beyond the former to permit three rows of rivets, with rapidly increasing pitch, to pass through it and the main plate, while it—the main plate—and the thicker covering plate were double riveted on each side of the center of the joint. There were thus ten rows of rivets in the joint, and its width was $15\frac{5}{8}$ inches. The length of the specimen was 5 feet, and it broke with a pull of 450,000 lbs. The fracture was in the main plate, through the

outer row of rivets (of greatest pitch), was granular, scarcely reduced in area, and it broke with a loud report. The preceding table shows that steel A, of which this joint was made, had excellent qualities, and it was therefore surprising that the fracture of the joint was short. It was observed, however, that, although the rivet holes were drilled with the plates in place, one of the remote side rivets sheared some time before the joint failed, and this suggested to Mr. Howard, in charge of the testing machine—who had seen similar phenomena—that the character of the break was due to a non-axial pull. A test of a piece of the steel adjacent to the joint showed that it still retained its qualities, and thus the theory seemed to be confirmed. Since having had this piece of experience, I have often wondered if mysterious failures of boilers might not be caused by a one-sided pull.

In connection with this, I wish to mention the value of a high elastic limit in steel, or other metals, provided it is accompanied with other good qualities. When this combination occurs, the high elastic limit is due to excellence in material and intelligence in manipulation. Hundreds of tests have convinced me that the elastic limit and ultimate strength are in no way dependent upon each other, and, as steel is useless after the elastic limit is passed, it seems absurd to specify any ultimate strength in particular.

In partial support of these statements and views, I have given the particulars of specimens rather fully, and below give some general results of tests of the twelve joints previously referred to, of various designs, six being made of plate A, and six of plate B, in pairs, each member of a pair being an exact duplicate of the other. All edges of plates were planed and nicely finished, all holes were accurately spaced, drilled in place, countersunk slightly, and the rivets were closed by a steam machine.

Table showing the efficiency of certain riveted joints in comparison with the strength of the solid plates.

Nos. of joints.	Steel A.		Steel B.	
	Thickness of plate.	Efficiency of joint.	Thickness of plate.	Efficiency of joint.
1	$\frac{3}{8}$ inch.	52 per cent.	$\frac{3}{8}$ inch.	42 per cent.
2	$\frac{9}{16}$ "	54 " "	$\frac{9}{16}$ "	48 " "
3	$\frac{9}{16}$ "	72 " "	$\frac{9}{16}$ "	70 " "
4	$\frac{9}{16}$ " and $\frac{3}{8}$ in.	75 " "	$\frac{9}{16}$ " and $\frac{3}{8}$ in.	73 " "
5	$\frac{9}{16}$ " and $\frac{3}{8}$ in.	87 " "	$\frac{9}{16}$ " and $\frac{3}{8}$ in.	83 " "
6	$\frac{9}{16}$ "	63 " "	$\frac{9}{16}$ "	59 " "

boiler joint came under my notice, when doing some experimental work for Mr. Leavitt, to which I have never seen reference. I refer to the effect of a non-axial pull on a joint, of which the following is an account:

A competitive test was being made of steel furnished by two makers for some 90-inch boilers of the locomotive type, having 2,800 square feet of heating surface each. The steel itself was tested and all of its important physical qualities noted, and the remainder of the plates made up into joints. The test pieces were each 34 inches long, 8 inches wide at the ends, and reduced to a finished width of $5\frac{5}{8}$ inches for a mid-length of 24 inches. The qualities of the steel as shown by the Emery testing machine at Watertown, Mass., were as follows:

	STEEL A, $\frac{9}{16}''$ THICK.	STEEL B, $\frac{9}{16}''$ THICK.
Section of specimen ..	5.61″ × .561″ = 3.147 sq. in.	5.595″ × .568″ = 3.18 sq. in.
Elastic limit....	31,141 lbs. per square inch.	30,191 lbs. per square inch.
Ultimate strength.....	59,056 " " "	62,924 " " "
Elongation in 10 inches	$31\frac{8}{10}$ per cent.	$31\frac{7}{10}$ per cent.
Contraction of area.. .	56 " "	43 " "
Appearance of fracture.	Fine, silky.	Fine, silky.

	STEEL A, $\frac{3}{8}''$ THICK.	STEEL B, $\frac{3}{8}''$ THICK.
Section of specimen ...	5.615″ × 0.377″ = 2.177 sq. in.	5.605″ × 0.381″ = 2.136 sq. in.
Elastic limit	37,317 lbs. per square inch.	33,708 lbs. per square inch.
Ultimate strength.....	59,669 " " "	63.314 " " "
Elongation in 10 inches	32 per cent.	29 per cent.
Contraction of area ...	52 " "	47 " "
Appearance of fracture	Silky, with minute laminations.	Silky, laminated.
Remarks.....	Very magnetic at fracture.	

Among 12 joints made from these plates was a butt joint of $\frac{9}{16}$ inch. A plate with a $\frac{9}{16}$ inch covering plate on one side and a $\frac{3}{8}$ inch covering plate on the other, the latter extending sufficiently beyond the former to permit three rows of rivets, with rapidly increasing pitch, to pass through it and the main plate, while it—the main plate—and the thicker covering plate were double riveted on each side of the center of the joint. There were thus ten rows of rivets in the joint, and its width was $15\frac{5}{8}$ inches. The length of the specimen was 5 feet, and it broke with a pull of 450,000 lbs. The fracture was in the main plate, through the

outer row of rivets (of greatest pitch), was granular, scarcely reduced in area, and it broke with a loud report. The preceding table shows that steel A, of which this joint was made, had excellent qualities, and it was therefore surprising that the fracture of the joint was short. It was observed, however, that, although the rivet holes were drilled with the plates in place, one of the remote side rivets sheared some time before the joint failed, and this suggested to Mr. Howard, in charge of the testing machine—who had seen similar phenomena—that the character of the break was due to a non-axial pull. A test of a piece of the steel adjacent to the joint showed that it still retained its qualities, and thus the theory seemed to be confirmed. Since having had this piece of experience, I have often wondered if mysterious failures of boilers might not be caused by a one-sided pull.

In connection with this, I wish to mention the value of a high elastic limit in steel, or other metals, provided it is accompanied with other good qualities. When this combination occurs, the high elastic limit is due to excellence in material and intelligence in manipulation. Hundreds of tests have convinced me that the elastic limit and ultimate strength are in no way dependent upon each other, and, as steel is useless after the elastic limit is passed, it seems absurd to specify any ultimate strength in particular.

In partial support of these statements and views, I have given the particulars of specimens rather fully, and below give some general results of tests of the twelve joints previously referred to, of various designs, six being made of plate A, and six of plate B, in pairs, each member of a pair being an exact duplicate of the other. All edges of plates were planed and nicely finished, all holes were accurately spaced, drilled in place, countersunk slightly, and the rivets were closed by a steam machine.

Table showing the efficiency of certain riveted joints in comparison with the strength of the solid plates.

Nos. of joints.	Steel A.		Steel B.	
	Thickness of plate.	Efficiency of joint.	Thickness of plate.	Efficiency of joint.
1	$\frac{3}{8}$ inch.	52 per cent.	$\frac{3}{8}$ inch.	42 per cent.
2	$\frac{9}{16}$ "	54 " "	$\frac{9}{16}$ "	48 " "
3	$\frac{9}{16}$ "	72 " "	$\frac{9}{16}$ "	70 " "
4	$\frac{9}{16}$ " and $\frac{3}{8}$ in.	75 " "	$\frac{9}{16}$ " and $\frac{3}{8}$ in.	73 " "
5	$\frac{9}{16}$ " and $\frac{3}{8}$ in.	87 " "	$\frac{9}{16}$ " and $\frac{3}{8}$ in.	83 " "
6	$\frac{9}{16}$ "	63 " "	$\frac{9}{16}$ "	59 " "

Referring back to the qualities of the material, it will be seen that the plates having the lowest ultimate strength, the highest elastic limit, the greatest elongation and contraction of area invariably made the most efficient joint, and the obvious explanation is that the more ductile steel more perfectly fitted around and bore upon the rivets after the joint was in tension, and the higher elastic limit allowed this to go on for a longer time than in the case of the lower.

The low efficiencies of some of the joints are due to their not being designed for strength, but rather for tightness in trying situations.

Good material, thick ingots, and proper manipulation seem to be the requisites of good steel for boiler plates.

It is much to be desired that a uniform size of specimens for testing should be adopted throughout the country, and that the elongation should be taken in the same length by all. The specimen should not be too short and narrow.

Mr. Oberlin Smith.—Some years ago I had a great many pipe dies to temper of the ordinary form, inch and a quarter to two inch, the smaller dies being for three-eighths, half inch, etc. The first named were four inches square and one inch thick. The smaller ones were usually a half inch thick and two inches square. Sometimes we would harden a large batch, a hundred, or two or three hundred, with very few breaks. We usually used English steel of the best kinds we could get. At another time the same brand of steel in different bars would show a loss of from ten to fifty per cent. of the dies when they were hardened. Sometimes one jaw in a die, sometimes all four, sometimes two or three of the jaws would crack a little way in, but occasionally they would crack clear through the die and tumble out. I reasoned that probably on account of these small members inside cooling first and trying to shrink, pulling themselves away from the hot part outside which had not yet shrunk, there was a tensile strain which pulled them off. The general tendency of a ring of steel in hardening would be for the inside to pull itself away from the outside. In practice this cannot happen, in the case of a ring, because of the arch principle; but, in the case of these dies, the same tendency occurred, and the jaws, having no keystone between them, so to speak, cracked off and went inwards. After trying various ways, I hit upon a system of hardening the outside first. I made a little notch in the edge of the tub, in which revolved

a rod carrying the die in clamps at the inner end while the crank at the outer end gave means of revolution. The hot die was slipped into the tub of water and revolved. The consequence was that the corners commenced to dip first, and then the crank end was raised slightly, so that the die went deeper and deeper into the water, but the outside was hardened before the inside. That remedied the trouble almost entirely. We did not have a jaw break off afterwards. We did occasionally have a corner crack off, but the percentage of loss was slight, so that the scheme was a practical success. As far as my experience goes with steel I am much inclined to believe that there is no mysterious dispensation of Providence about it. I think we can trace most of the trouble to simple mechanical action. There may be some chemical action also or some irregularity in the composition of the molecules of carbon or iron, and strains may be thus produced about which we do not know. I do know that a great deal of the cracking we see can be accounted for by the simple principle involved in trying to work a very brittle material under strains which are too great for it. If we take a large tap or large punch, especially if it is as large as five or six inches in diameter, and, heating it red-hot, dip it in water, we very often find that part of the outside will crack off. Now this is evidently due to the outside cooling first, before the inside has had time to cool, thus putting the outside under a tensile strain while the inside forms an abutment and prevents it from going inward. A thin hoop of steel dipped red-hot into water and made almost as brittle as glass, is not very apt to crack. It can freely go in. We all know that a hole is sometimes drilled in the end of a large cylindrical piece of steel for the purpose of preventing cracking, with very good success. It enables the hoop thus formed to shrink as it wants to. We are all aware that thin light pieces of steel are not so likely to crack in hardening as solid heavy pieces. I think the irregular strains in steel are due in the first place perhaps to some irregularities in the homogeneity of the steel when it is cast; afterwards to irregularities of structure caused by rolling or hammering; and to irregularities due to uneven heating. Here are three distinct reasons why the steel is not homogeneous all through, but probably irregular heating has a great deal the most to do with it. Take any plate of steel—say a thin large plate—that is homogeneous to begin with, having no internal strains. Now if we heat it around the edges a little more than in

the center, it expands first around the edge; the edge goes out; the middle does not; this puts a tensile strain around the edge, and that strain remains there, or partially so. There are sometimes strains in there that are almost up to the limit of strength, so that the least jar, or some slight molecular change in the steel itself, changes its shape just a little, and away it goes. It tumbles down to the floor, broken. I think that our chief remedies for this trouble of steel cracking in hardening are, in the first place, to keep it homogeneous as nearly as we can in the hammering and the rolling, and in the heating, and then in hardening, but being very careful to treat it, when dipping it in water, *according to its shape.* Each particular shape must be studied by itself, with a view to not putting a strain in by leaving the hot part to hold back against some cooled part—some part that has already been cooled and made brittle—thus subjecting such brittle part to tensile strains. Nearly every shape wants particular arrangement of tempering. Sometimes you can get a very good result by squirting water through a tube—sometimes through an annular tube. I have had tempered a good many rings (of special section) in this latter way with good success, laying a plate over them and squirting the water down through.

Before leaving the subject of hardening steel, I want to say a word or two about the treatment of steel in the fire to prevent burning. I believe a good deal of the burning of steel is done by the *rapid* action of the blast upon it, even if it is not heated up beyond the proper cherry red. Not only is the mischief done by too quick heating, but by the action of the air impinging upon the metal. To remedy this we want very deep fires, and must heat slowly and let the flames pass slowly by, so that a great volume of air does not touch the steel. I am not chemist or metallurgist enough to know whether we can decarbonize steel by blowing a quick blast upon it at a moderate heat; but, so far as I have observed, I think there is considerable action of that kind, where you have heated it rapidly, by letting a flame of oxygen blow upon the surface in a shallow fire with the blast coming up from beneath and blowing directly upon the steel. Hence, one remedy is a deep fire, and another is to cover the metal up as much as possible.

Prof. John E. Sweet.—I was asked to call the attention of the Society to one peculiarity in steel, that is hardened steel, used for standard gauges. A gentleman in Syracuse is making measuring

machines, and has occasion to make length pieces for use in the machine. He finds that they are constantly changing their length after hardening. The question is, how long he should keep them before sending them out as standards of length. I presume Mr. Bond can give us some information in regard to the same subject.

I would also say in regard to standard gauges, where they have been ground to absolutely true cylinders set up on their end and allowed to remain for several hours and then measured, they were found to be the largest in their north and south directions, and, taking the same piece and setting it on end, and putting the north east and the south west, their diameters would again change, so that they would be largest in the north and south directions. This I give on the authority of S. Ashton Hand, a gentleman who has been engaged in the standard gauge business.

That standard pieces an inch and two inches and three inches in length do change in length, is without doubt, and the thought has occurred to me about some way to prevent it. Should we subject these pieces to an end-pressure before they are finished? Would that help the difficulty? I believe they grow shorter, and by subjecting them to a certain amount of end-pressure, it might take out that tendency at once.

Mr. Geo. M. Bond.—I would like to answer the question as far as it is possible for me to do so. In regard to the practicability of preventing a change in length, I can only say that the best way of avoiding it would be not to finish the gauge for at least six months after it had been hardened, because I find that in cases of large-diameter cylindrical gauges, in hardening the gauge in water the end naturally becomes the hardest, being dipped usually end first, and this would tend to establish unequal internal strains in the steel, those at the end of the gauge being greater than in the body part of it. This strain would have to be resisted by the metal in its internal structure, and it is reasonable to presume that in time the "fatigue" of the metal would result in the end of the gauge becoming practically smaller than the diameter of the body.

We find in our experience that nearly all gauges, in the course of time, become slightly smaller at the end, sometimes as much as two ten-thousandths of an inch—a difference which is quite perceptible in the hands of a tool-maker. We find that in allowing gauges to "season" thoroughly before the final finishing is done

upon them, this tendency to become tapering at the end is practically obviated. The end-measure gauges which we have made and have had in stock for at least three years, and which I have measured during the past two years, show no perceptible change in length as compared with our standard reference line-measure bars, and the latter have been compared at various times by Professor Rogers, during the past five years, and show no change in relation to those in his possession.

I think, therefore, that the most rational method of treating standard gauges during the process of construction, is to allow them to pass through this "transition" stage merely partly finished, and have the changes due to settling of the differences of molecular strains occur before the final finishing is done. I also think much depends upon the degree of hardness of the gauge as to the amount of change which is likely to occur after hurried finishing I have taken pieces of steel which were hardened as thoroughly as fire and water will make them, and have made many experiments to determine if a rise of temperature and sudden cooling would change their length, and found in the case of an inch end-measure piece thus treated, raising the temperature about 400 degrees F., and suddenly cooling, its length would be reduced about one-thousandth of an inch after the second cooling mentioned. Hence it seems desirable to keep standard gauges as much as possible from the influence of temperatures higher than that at which they were finished, for even the heat of the sun upon gauges left exposed to direct rays, raising the temperature of them to about 120, or even only to 110 degrees F., might have a tendency to shorten them when they return to the conditions of a normal temperature.

This seems to me to answer the question, so far as my own experience goes, and I can say that we find this knowledge to be of practical value in our work in this direction.

I would like to say, before closing, in relation to hardened steel, and referring to the suggestion of Mr. Smith,—that of drilling a hole in the end of a large mass of steel before attempting its hardening,—that I think it might be supplemented by drilling the hole entirely through the steel if it be a tap or other article of extra size, and, if a tap, to have the hole drilled through the shank, as well as through the body part. In hardening taps of diameters of from about two and one-half inches to eight or ten inches, we find it necessary to drill entirely through body and shank, even if

the tap should be three or four feet long. The hole is drilled through in order to give complete circulation of the water in cooling it, even though the shank is not heated to redness nor hardened in the least.

The gauge I referred to and exhibited at the meeting of the Society of Arts in Boston, last March, was two and three-eighths inches diameter, and had been hardened and afterwards finished to a definite standard diameter, which was two ten-thousandths of an inch larger than a two and three-eighths gauge. Four days after this finished size had been attained I found it cracked through the center and around the outside, in several directions, but leaving the ends of the cylinder perfectly intact. After carefully measuring the uninjured ends I found them both to be six ten-thousandths of an inch larger than they were originally, which seems to show that the enormous internal strains which had been set up in the gauge by hardening had been relieved by the cracking of the center of the gauge, allowing the ends to assume their normal condition unrestricted by the counteracting forces in the body of the gauge.

This, to my mind, seems to explain fully the reason why the end of a gauge ordinarily becomes smaller in the course of time than the body part, when the latter is strong enough successfully to withstand the pressure outwards of the compressed ends.

It is now nearly four years since the break occurred, and yet there is no perceptible change in the diameter of the ends up to the present time, showing conclusively that the internal strains are now practically neutralized.

Mr. R. W. Hunt.—It was suggested to me that I should give to you a little manufacturing incident within my experience, in regard to the effect of manganese on steel for gun barrels. And while I do not know that it will be of any special value, as there is no prospect of our having a war, and hence do not want gun barrels, at the same time I will give it. During the Russian and Turkish war the Winchester Arms Company had a contract with the Turkish Government for furnishing rifles. Smith & Wesson had also a contract with both the Turks and Russians for furnishing them with revolvers. Both concerns were using imported metal for making parts of those articles. Smith & Wesson were using imported steel, and the Winchester Company using it and what is known as Marshall iron, a special English iron then costing,

I think, about ten cents a pound. At that time the rail business was very bad, and the point with some of us was,—is it possible to divert the product of the Bessemer converter into some other channel? And as Troy is perhaps as badly situated as any place in the country to make rails for a great deal more than it is possible to get for them, we tried to make something else. As you will remember, at that time the lessons of the Exhibition of 1876 were fresh in our minds. We had there seen the wonderful things the Swedes had done in Bessemer steel. It happened to be my fate to come in contact with Smith & Wesson and the Winchester Arms companies. They gave me samples of their metal. I took them home, had them analyzed, and then started in to make something to take its place, and we met with success after some failures. The steel is cut into the length necessary to make a barrel, they drill a hole through it and then ream that hole out, and rifle. In the first place they wanted the metal to be soft, and in the next place they wanted to throw a very short chip. If the chip was long and tenacious it would lead the drill off to one side, making it difficult to get the bore of the barrel in the center; and while we were easily able to give them a steel which seemed to be very satisfactory so far as softness and freedom from flaws was concerned, they had difficulties from long chips, and it took considerable puzzling to determine what was the matter. After many experiments I found if we allowed the manganese to run up they would get that kind of chip. Hence it became necessary to make steel having from eighteen to twenty-two one-hundredths carbon, and about four-tenths of manganese. That composition gave them the short chip, and has ever since, I believe, been satisfactory. They used a great many tons of the metal. Smith & Wesson used much of it for the barrels of their pistols, and I have no doubt that many souls reached their reward earlier in consequence. We got a good price too. [Laughter.] Unfortunately we did not establish a Trust, and what then cost them seven or eight cents a pound, I believe they now get for about two and a half. I, of course, am anxious to hear what our fellow members are going to say about the peculiarities of steel, for it has many, but I think the people who handle steel have great many more, and many times, when they blame the metal, he fault lies, perhaps, not with that particular person who is meeting with a disappointment, but with some one through whose hands the metal has passed. It is ever so much more sensitive, as you

so well know, than iron. If it has an enemy in the world, that enemy is heat. I mean good old-fashioned heat, not the kind we have heard of to-night (electrical welding), but the heat coming from the combustion of fuel. I dare say all of you have read the paper presented by Mr. William Metcalf before the Society of Civil Engineers on the treatment of steels, which certainly is worthy, in my judgment, to be a text-book. Now it is true, that as you increase the carbon you increase the danger; therefore temperatures which would be safe with one grade, would be fatal to another.

The machinery builders, like all the rest of the manufacturing world, do not pay as much for steel as they used to, so there is a temptation for the people who make it to be less careful. They must make a large product and sell it cheap in order to get a market. The reason one bar will not take a temper and another will, may be because they come from entirely different lots or heats; but assuming that one end of a bar will stand all sorts of punishment and the other end will not, I would give as an explanation that somebody had done something he ought not to have done to that bar of steel. It may not have been in the blacksmith shop, or the forge shop of the user; it may have been the man who heated that bar in the rolling-mill where it was formed—he may have overheated one end of it. If so, the metal itself was not to blame, it was the man only who was vile. It is such a pure metal; it has often seemed to me that a fit comparison between iron and its sister metal—steel—would be as we compare our coarse natures with those of the dear creatures whom we have with us here to-night. We know how sensitive they are and that of which we take no notice affects their whole being; and so it is with this higher metal. It wants to be treated in a careful manner all the way through, and if you sin your sin will be visited on you and the people who buy from you. Now, as I had occasion to say before the Mining Engineers in a paper which I presented in regard to steel rails—I hope some of you will do me the honor to read it when it is in print—there has been a great complaint throughout the United States, in regard to the quality of steel rails; that is, that the present rails are not as good as the rails formerly made. That, to a certain extent, is I think due to the natural tendency to say what was is better than what is. At the same time I think we cannot shut our eyes to the fact that the general rails of to-day, or at least of the last few years, are not as

good as the best of the rails of the past, and if I believe anything it is that the cause of that deterioration, the principal cause, is the amount of heat there has been applied to the steel in making those rails. The great rails of the past were generally spoken of as the "John Brown rails." We imagined that, when the time did come when those rails would come out of the track so that we could get hold of them and analyze them, that we could find out the reasons for their having given such wonderful service. It was stated that they had been made out of the purest Swedish irons, and we would find they were almost entirely without phosphorus. It was stated also that they were largely made out of charcoal iron, so that the deleterious effect of mineral fuel had not entered into the metal. Now samples from hundreds of those rails have been analyzed, and, chemically, many of them were found about as mean Bessemer steel as you could imagine—no uniformity about them. The carbon jumping through at least ten points, .28 to .38, with some below .25; the phosphorus anywhere from .07 up to .15, and the manganese generally low. I think there is not a rail-maker that to-day would make that steel and send it forth with his guarantee that it was particularly good metal; and still they were the rails that did give this great service. Now, there must have been a reason for it. We easily understand why it is that they were not chemically as pure as was supposed. The laboratory did not then tell us everything. The processes were not perfected so that they could give the minute quantities of phosphorus which can now be determined. Mr. Bessemer himself said that iron containing over .01 of one per cent. of phosphorus was not fit for his process. The truth is he was then using pig-iron that had one-tenth. Ferro-manganese was then unknown. Spiegel contained from eight to ten per cent. of manganese only, so if the maker maintained his carbon from thirty to forty he could not get high manganese. But, as I say, varying as they did in their chemical constitution, giving the results they did, there must be a cause for it. That cause was certainly a physical one. That metal was treated in the most gingerly manner for fear it would go to pieces, and the finishing process applied to it while the metal was at a low temperature. The result was those celebrated rails; and I believe that the result to-day with metals treated the same way would be more celebrated rails.

Mr. F. H. Richards.—Regarding the steel which, as the gentle-

man has remarked, he has been furnishing to Smith & Wesson, I wish to say that only a few months ago I had occasion to use the same metal for making the working parts of various small machines, and found it exceedingly satisfactory, principally for the reason that the chip, as he states, is short. This quality of the metal is an exceedingly important matter for the builders of small machinery where they want the threaded holes tapped out to exact sizes, and without reducing the tools too much. This is an instance illustrating how it is that many of the machine-shop conundrums of the present day are being solved by the steel-makers and not by the machinists themselves. In this view, the manufacturers of small wares will, I think, generally agree with me.

Another important matter is the working—or rather re-working—of steel for small tools, such as dies, taps and reamers, and especially such small tools as are used in the tool rooms of manufactories,—in what we, down East, call the hardware manufactures. These tools are of great variety, and up to a dozen or twenty years ago it was a custom almost universal to hand-forge the blanks to approximately their final size. These were then finished up and hardened, and I suppose that more various results could scarcely be obtained than were obtained. After a time it began to dawn on some of the master mechanics of those establishments that working steel in a small way was a failure; and I well remember the time when one of them gave out the order that, thereafter, none of those tools should be forged; that they should be cut from the solid bar. The result was an immediate and very great improvement, and I believe they have never gone back to the old method. The former practice had been so various that very naturally all sorts of theories were afloat as to just how steel should be heated, and just how it should be cooled. The theories were, indeed, almost as various as the steel-workers themselves. At the present time I believe the general practice has become substantially uniform. One tool maker of the olden time would argue that steel would swell by being hardened. Another would argue that it would shrink, and so on. Men working side by side would maintain opposite theories. Much more in this line might be said, but the only point I wish to make is this: that steel suitable to be used for small tools is not improved by working after it is first made. Its true and proper character is given to it in the making, and follows it through life.

It is reported by several competent tool makers that the prefer-

able method of making steel tools requiring accurate form, is first to shape the piece approximately, then thoroughly to harden the same, next, and immediately, to anneal it carefully and slowly, and finally to re-shape the piece and harden and temper in the ordinary way. The first hardening is claimed to induce those internal strains and warping due to the cooling of a piece of the *particular shape*, which strains are at once relieved by the *immediate* re-annealing of the piece. The re-shaping, by reducing the entire surface of the article, removes the numerous *incipient fire-cracks* which are inevitably formed, thereby greatly lessening the danger of cracking at the final hardening.

This plan seems to me well worth a more general trial. In one instance, which came under my notice, the pieces were subjected to the operation three times, and very uniform results were obtained.

Mr. Wm. Kent.—My views as to shrinkage fits for steel are that one part in one thousand should be allowed, that is one one-thousandth of an inch for every inch in diameter. The reason is that machinery steel may be strained to 30,000 lbs. per square inch without giving an appreciable permanent set, or exceeding its elastic limit. The modulus of elasticity of steel being about 30,000,000 lbs., a strain of 30,000 lbs. causes an elastic stretch of one one-thousandth part of its length. The American Railway Master Mechanics' Association prescribes the following for shrinkage of tires. This is about 1 part in 950.

Diameter.	Allowance for shrinkage.
38″	.040″
44″	.047″
50″	.053″
56″	.060″
62″	.066″
66″	.070″

Mr. Oberlin Smith.—I want to say here that those gentlemen referred to are both right. Steel does get larger in hardening and does get smaller in hardening. I have noticed it especially in rings ten inches in diameter with a cross section of about one or one and a quarter square inches—all being apparently alike. On hardening them, under the same conditions, some of them will be from one sixty-fourth to one thirty-second larger in diameter than when soft, and some of them will be as much smaller. It seems impossible to get uniformity, and I think that the theories in question are both right—that is when they don't prove wrong.

Mr. R. G. Ewer.—My early experience in making dies for tin

cans—it used to be a habit with us to grind out the scores that were worn in the die from drawing the tin through, and re-hardening. The hardening process would contract the die so much that the scores would be ground out, showing that the steel contracted in hardening.

Mr. I. M. Yost.—We find in our practice that cast steel reduces under heating and soft steel enlarges generally.

Mr. W. M. Barr.—My experience in working up bar steel into taps, reamers and special tools is that we do not know what is going to happen. I had a list of taps ranging in length from four inches to two feet, in which I had measured the increase or decrease in length. I looked for that paper the other day, thinking it might be of some service in this topical discussion; but unfortunately I could not find it. Of some—I do not know exactly, but I will say fifty pieces—I do not think there were over half a dozen that were of the same length, after they were hardened, as originally made. I have also experimented with hardened steel bushings to go into reamed holes; the bushings were not to be ground after they were hardened. I do not know what per cent. of the bushings would not enter the holes at all; none of them were too small, but they were nearly all large. Some of the enlargement may be due to a slight scale or oxide on the outside, consequent upon the heating, but I am sure that much of the change in size was due to the molecular changes in the material itself. But after wrestling with this question, not as a steel-maker, but as a steel-user, for a good many years, I thought it might be interesting, as a contribution to the subject, to say to those here that I didn't know anything about it. [Laughter.]

The Chairman.—I believe it required a political commission on the Tariff for one of the Presidents to define what steel was.

Mr. Oberlin Smith.—I would say, Mr. President, that steel rings are very uncertain. They sometimes shrink and sometimes swell in hardening; and sometimes stay about the same size. Solid pieces of steel, say prismatic in shape, perhaps three or four times as long as they are wide or thick, and perhaps a little wider than they are thick (for instance, half an inch thick, an inch wide, and three or four inches long) will often swell up in the middle, on the flat sides most frequently—not quite always, but more often than not. The ends will not be larger but a little smaller, if anything. Thus the sides, which were made perfectly flat, will generally be a little convex.

Mr. Jerome Wheelock.—I think Mr. Barr's statement is a dead

give way on the start, when he says that he heats the steel up to the point of scaling. My experience with the bushings that we introduce in our engines, and hardened steel stems, is that we do not heat them to a point where they would scale, but we give them plenty of medicine and take considerable care in the heating of them. Being slow about it, and keeping the temperature down below the scaling point, we do not find any of this enlargement. Our fits are made reasonably close to run, and usually the stem can be pushed into the hole (they are some nine or ten inches long), and then it is relieved by straightening up in the process of grinding, of course the larger and the longer the more care. In the steamer *Nashua* we have stems some nine feet long and two and a half inches in diameter. The construction of that machinery I did not have the care of—only in a general way. It was made in New York and the process of hardening those steels came about just after Mr. Roach had been out on Long Island Sound with a broken steel shaft. He came back and said that no more steel should come into any work of his. I protested in regard to it and urged that hardened steel bushings and stems must be used. The operation of hardening was quite a bugaboo with them. After one or two trials I took the matter in hand and simply rigged up a barrel of ice water, leaving part of the head in the barrel—I will explain that the steel was about two feet from the end where it had been hardened, with a space about eighteen inches long at each end. I simply rigged up a guide to drop vertically and heated the steel slowly and dropped it quickly into the water. It came out practically straight, copying the operation as used in straightening files while the steel was warm, putting it on the centers, a shaft some nine feet long was practically straight and without any scale; ran very nicely; and it occurs to me that the proper way to harden steel and keep it straight, especially bars that you wish to maintain in a parallel position, is to get the hot surface under solid water as quickly and as vertically as possible so that the surface of the water will not influence the part that is to be hardened unevenly by ebullition. I do not think the closing around of the chilling operation of the water can be too quick. The only improvement I suggest would be, if we could erect a cannon and shoot the steel like a ramrod into the water, we would have a straight piece after cooling.

The Chairman.—Did Mr. Wheelock move the steel in water as in tempering, or let it be still? When you put this rod of steel

down in the water, did you let it remain still in that way or keep stirring it around?

Mr. Wheelock.—No, sir, we let it be its own way; falling vertically into the water. The bottom of the barrel was supported by a flat rock, and we left it there until it was warm—what a person would call warm, being able to bear the hand on the surface, and then straightened it a little. The worst case of springing in the bearings that we had to deal with was less than one thirty-second of an inch out of true. That was straightened by the operation. The place of hardening was true, but at the point of leaving the hard, it was a little changed, due I presume to ebullition.

Mr. Geo. E. Whitehead.—In my experience we get more of this trouble in hardening in the winter than we do in summer, and I am inclined to think that dipping in water too cool has the effect of breaking tools a great deal quicker than if the water was of a milder temperature. I have hardened a great many dies and had quite a number crack. Most of the dies that cracked came from the softer or inferior grades of steel. Where we use the higher quality of tool steel we do not lose so many dies in tempering. I have had a good deal of experience such as has been mentioned by the different members. I have put soft steel shafts in presses where they would run six months and break, and, replaced with wrought iron, they have run three or four years before breaking. I have also taken threading-dies that were too large and made them smaller by re-hardening, and I presume a great many mechanics have had similar experience.

No. 329—70.

Is there any recognized method of deciding proper sizes of tap-drills for given threads and for different materials? and, if not, would it not be advisable to formulate one based upon the amount of metal corresponding to some fraction of depth of thread to be left in the hole to be operated upon by the tap for each material?

Mr. Geo. E. Whitehead.—The question of tap-drill sizes is one that is very important, and it is very desirable that we establish a correct table to work to. I have used for the U. S. Standard thread (the table published by the Pratt & Whitney Co. in their catalogue) and find it practically right for iron or steel. I would only suggest a slight change in some sizes. By subtracting the exact size from their drilling size a trifle more allowance is made for the one-quarter inch than five-sixteenths size, and should be the reverse. Also more allowance is made for the five-eighths than

give way on the start, when he says that he heats the steel up to the point of scaling. My experience with the bushings that we introduce in our engines, and hardened steel stems, is that we do not heat them to a point where they would scale, but we give them plenty of medicine and take considerable care in the heating of them. Being slow about it, and keeping the temperature down below the scaling point, we do not find any of this enlargement. Our fits are made reasonably close to run, and usually the stem can be pushed into the hole (they are some nine or ten inches long), and then it is relieved by straightening up in the process of grinding, of course the larger and the longer the more care. In the steamer *Nashua* we have stems some nine feet long and two and a half inches in diameter. The construction of that machinery I did not have the care of—only in a general way. It was made in New York and the process of hardening those steels came about just after Mr. Roach had been out on Long Island Sound with a broken steel shaft. He came back and said that no more steel should come into any work of his. I protested in regard to it and urged that hardened steel bushings and stems must be used. The operation of hardening was quite a bugaboo with them. After one or two trials I took the matter in hand and simply rigged up a barrel of ice water, leaving part of the head in the barrel—I will explain that the steel was about two feet from the end where it had been hardened, with a space about eighteen inches long at each end. I simply rigged up a guide to drop vertically and heated the steel slowly and dropped it quickly into the water. It came out practically straight, copying the operation as used in straightening files while the steel was warm, putting it on the centers, a shaft some nine feet long was practically straight and without any scale; ran very nicely; and it occurs to me that the proper way to harden steel and keep it straight, especially bars that you wish to maintain in a parallel position, is to get the hot surface under solid water as quickly and as vertically as possible so that the surface of the water will not influence the part that is to be hardened unevenly by ebullition. I do not think the closing around of the chilling operation of the water can be too quick. The only improvement I suggest would be, if we could erect a cannon and shoot the steel like a ramrod into the water, we would have a straight piece after cooling.

The Chairman.—Did Mr. Wheelock move the steel in water as in tempering, or let it be still? When you put this rod of steel

down in the water, did you let it remain still in that way or keep stirring it around?

Mr. Wheelock.—No, sir, we let it be its own way; falling vertically into the water. The bottom of the barrel was supported by a flat rock, and we left it there until it was warm—what a person would call warm, being able to bear the hand on the surface, and then straightened it a little. The worst case of springing in the bearings that we had to deal with was less than one thirty-second of an inch out of true. That was straightened by the operation. The place of hardening was true, but at the point of leaving the hard, it was a little changed, due I presume to ebullition.

Mr. Geo. E. Whitehead.—In my experience we get more of this trouble in hardening in the winter than we do in summer, and I am inclined to think that dipping in water too cool has the effect of breaking tools a great deal quicker than if the water was of a milder temperature. I have hardened a great many dies and had quite a number crack. Most of the dies that cracked came from the softer or inferior grades of steel. Where we use the higher quality of tool steel we do not lose so many dies in tempering. I have had a good deal of experience such as has been mentioned by the different members. I have put soft steel shafts in presses where they would run six months and break, and, replaced with wrought iron, they have run three or four years before breaking. I have also taken threading-dies that were too large and made them smaller by re-hardening, and I presume a great many mechanics have had similar experience.

No. 329—70.

Is there any recognized method of deciding proper sizes of tap-drills for given threads and for different materials? and, if not, would it not be advisable to formulate one based upon the amount of metal corresponding to some fraction of depth of thread to be left in the hole to be operated upon by the tap for each material?

Mr. Geo. E. Whitehead.—The question of tap-drill sizes is one that is very important, and it is very desirable that we establish a correct table to work to. I have used for the U. S. Standard thread (the table published by the Pratt & Whitney Co. in their catalogue) and find it practically right for iron or steel. I would only suggest a slight change in some sizes. By subtracting the exact size from their drilling size a trifle more allowance is made for the one-quarter inch than five-sixteenths size, and should be the reverse. Also more allowance is made for the five-eighths than

give way on the start, when he says that he heats the steel up to the point of scaling. My experience with the bushings that we introduce in our engines, and hardened steel stems, is that we do not heat them to a point where they would scale, but we give them plenty of medicine and take considerable care in the heating of them. Being slow about it, and keeping the temperature down below the scaling point, we do not find any of this enlargement. Our fits are made reasonably close to run, and usually the stem can be pushed into the hole (they are some nine or ten inches long), and then it is relieved by straightening up in the process of grinding, of course the larger and the longer the more care. In the steamer *Nashua* we have stems some nine feet long and two and a half inches in diameter. The construction of that machinery I did not have the care of—only in a general way. It was made in New York and the process of hardening those steels came about just after Mr. Roach had been out on Long Island Sound with a broken steel shaft. He came back and said that no more steel should come into any work of his. I protested in regard to it and urged that hardened steel bushings and stems must be used. The operation of hardening was quite a bugaboo with them. After one or two trials I took the matter in hand and simply rigged up a barrel of ice water, leaving part of the head in the barrel—I will explain that the steel was about two feet from the end where it had been hardened, with a space about eighteen inches long at each end. I simply rigged up a guide to drop vertically and heated the steel slowly and dropped it quickly into the water. It came out practically straight, copying the operation as used in straightening files while the steel was warm, putting it on the centers, a shaft some nine feet long was practically straight and without any scale; ran very nicely; and it occurs to me that the proper way to harden steel and keep it straight, especially bars that you wish to maintain in a parallel position, is to get the hot surface under solid water as quickly and as vertically as possible so that the surface of the water will not influence the part that is to be hardened unevenly by ebullition. I do not think the closing around of the chilling operation of the water can be too quick. The only improvement I suggest would be, if we could erect a cannon and shoot the steel like a ramrod into the water, we would have a straight piece after cooling.

The Chairman.—Did Mr. Wheelock move the steel in water as in tempering, or let it be still? When you put this rod of steel

down in the water, did you let it remain still in that way or keep stirring it around?

Mr. Wheelock.—No, sir, we let it be its own way; falling vertically into the water. The bottom of the barrel was supported by a flat rock, and we left it there until it was warm—what a person would call warm, being able to bear the hand on the surface, and then straightened it a little. The worst case of springing in the bearings that we had to deal with was less than one thirty-second of an inch out of true. That was straightened by the operation. The place of hardening was true, but at the point of leaving the hard, it was a little changed, due I presume to ebullition.

Mr. Geo. E. Whitehead.—In my experience we get more of this trouble in hardening in the winter than we do in summer, and I am inclined to think that dipping in water too cool has the effect of breaking tools a great deal quicker than if the water was of a milder temperature. I have hardened a great many dies and had quite a number crack. Most of the dies that cracked came from the softer or inferior grades of steel. Where we use the higher quality of tool steel we do not lose so many dies in tempering. I have had a good deal of experience such as has been mentioned by the different members. I have put soft steel shafts in presses where they would run six months and break, and, replaced with wrought iron, they have run three or four years before breaking. I have also taken threading-dies that were too large and made them smaller by re-hardening, and I presume a great many mechanics have had similar experience.

No. 329—70.

Is there any recognized method of deciding proper sizes of tap-drills for given threads and for different materials? and, if not, would it not be advisable to formulate one based upon the amount of metal corresponding to some fraction of depth of thread to be left in the hole to be operated upon by the tap for each material?

Mr. Geo. E. Whitehead.—The question of tap-drill sizes is one that is very important, and it is very desirable that we establish a correct table to work to. I have used for the U. S. Standard thread (the table published by the Pratt & Whitney Co. in their catalogue) and find it practically right for iron or steel. I would only suggest a slight change in some sizes. By subtracting the exact size from their drilling size a trifle more allowance is made for the one-quarter inch than five-sixteenths size, and should be the reverse. Also more allowance is made for the five-eighths than

give way on the start, when he says that he heats the steel up to the point of scaling. My experience with the bushings that we introduce in our engines, and hardened steel stems, is that we do not heat them to a point where they would scale, but we give them plenty of medicine and take considerable care in the heating of them. Being slow about it, and keeping the temperature down below the scaling point, we do not find any of this enlargement. Our fits are made reasonably close to run, and usually the stem can be pushed into the hole (they are some nine or ten inches long), and then it is relieved by straightening up in the process of grinding, of course the larger and the longer the more care. In the steamer *Nashua* we have stems some nine feet long and two and a half inches in diameter. The construction of that machinery I did not have the care of—only in a general way. It was made in New York and the process of hardening those steels came about just after Mr. Roach had been out on Long Island Sound with a broken steel shaft. He came back and said that no more steel should come into any work of his. I protested in regard to it and urged that hardened steel bushings and stems must be used. The operation of hardening was quite a bugaboo with them. After one or two trials I took the matter in hand and simply rigged up a barrel of ice water, leaving part of the head in the barrel—I will explain that the steel was about two feet from the end where it had been hardened, with a space about eighteen inches long at each end. I simply rigged up a guide to drop vertically and heated the steel slowly and dropped it quickly into the water. It came out practically straight, copying the operation as used in straightening files while the steel was warm, putting it on the centers, a shaft some nine feet long was practically straight and without any scale; ran very nicely; and it occurs to me that the proper way to harden steel and keep it straight, especially bars that you wish to maintain in a parallel position, is to get the hot surface under solid water as quickly and as vertically as possible so that the surface of the water will not influence the part that is to be hardened unevenly by ebullition. I do not think the closing around of the chilling operation of the water can be too quick. The only improvement I suggest would be, if we could erect a cannon and shoot the steel like a ramrod into the water, we would have a straight piece after cooling.

The Chairman.—Did Mr. Wheelock move the steel in water as in tempering, or let it be still? When you put this rod of steel

down in the water, did you let it remain still in that way or keep stirring it around?

Mr. Wheelock.—No, sir, we let it be its own way; falling vertically into the water. The bottom of the barrel was supported by a flat rock, and we left it there until it was warm—what a person would call warm, being able to bear the hand on the surface, and then straightened it a little. The worst case of springing in the bearings that we had to deal with was less than one thirty-second of an inch out of true. That was straightened by the operation. The place of hardening was true, but at the point of leaving the hard, it was a little changed, due I presume to ebullition.

Mr. Geo. E. Whitehead.—In my experience we get more of this trouble in hardening in the winter than we do in summer, and I am inclined to think that dipping in water too cool has the effect of breaking tools a great deal quicker than if the water was of a milder temperature. I have hardened a great many dies and had quite a number crack. Most of the dies that cracked came from the softer or inferior grades of steel. Where we use the higher quality of tool steel we do not lose so many dies in tempering. I have had a good deal of experience such as has been mentioned by the different members. I have put soft steel shafts in presses where they would run six months and break, and, replaced with wrought iron, they have run three or four years before breaking. I have also taken threading-dies that were too large and made them smaller by re-hardening, and I presume a great many mechanics have had similar experience.

No. 329—70.

Is there any recognized method of deciding proper sizes of tap-drills for given threads and for different materials? and, if not, would it not be advisable to formulate one based upon the amount of metal corresponding to some fraction of depth of thread to be left in the hole to be operated upon by the tap for each material?

Mr. Geo. E. Whitehead.—The question of tap-drill sizes is one that is very important, and it is very desirable that we establish a correct table to work to. I have used for the U. S. Standard thread (the table published by the Pratt & Whitney Co. in their catalogue) and find it practically right for iron or steel. I would only suggest a slight change in some sizes. By subtracting the exact size from their drilling size a trifle more allowance is made for the one-quarter inch than five-sixteenths size, and should be the reverse. Also more allowance is made for the five-eighths than

eleven-sixteenths or three-quarters inch—I do not know of any rules for getting at the proper drilling sizes, as each kind of metal would require to be drilled differently. I find it very convenient to have a table with both exact size and drilling size printed on same sheet for shop use.

For gauge work we use the exact size and for ordinary work the drilling size. I did not know how the Pratt & Whitney Co. obtained their drilling sizes, so I tried to procure them by drilling different sized holes, tapping each with a standard tap and then examining thread with microscope. After making several tests I found the drilling sizes which I got were so near to the Pratt & Whitney sizes that we continued using their table for some time. We are now using the same with the exception of a few sizes such as previously mentioned.

We make thousands of studs, and rarely hear of any complaints from them. No doubt the threads are jammed a trifle when inserted, and the slight imperfections in pitch and size of thread are hardly percep ible.

The taps and dies are wearing more or less and consequently we must have one or two thousandths of an inch limit for practical work.

Mr. Geo. M. Bond.—I would like to say in regard to our practice that it is simply the range of sizes to which Mr. Whitehead referred that was adopted arbitrarily. The iszes adopted were for the quarter-inch United States Standard thread, Sellers' system, to be the size of the tap drill which would be 0.004 of an inch larger than exact diameter at the root of the thread for one-quarter inch bolts or screws, increasing gradually by differences, found by experience in our tool room to be about right, up to 0.010 for an inch bolt or screw. This gives good tap drill sizes for cast iron; but if holes are to be tapped requiring complete threads; that is, a full thread of 60 degrees in the angle, and flat top and bottom one-eighth of the pitch, then of course the exact root diameters of the different size bolts, according to the Sellers' formula for the tap-drills, must be used instead.

For cast iron, the holes should be large enough to prevent the bottom of the thread of the bolt crowding against the top of the thread in the tapped hole, as the latter is likely to crumble and occasion trouble when the bolt is to be unscrewed; but for wrought iron and steel, drills may be used which are more nearly the exact diameter of the root of the thread, though a little clearance in this respect is not a disadvantage.

tighter your bolts are going to fit. In tapping with power there should be a certain amount of flexibility between spindle and tap. The wobbling of the tap without a guide will cut the cast iron hole out a little more than you want very quickly, although you may hardly appreciate that you are enlarging that hole. It is possible to make a fit with the same tap tighter in cast iron than in wrought iron, under certain conditions of workmanship.

Mr. Oberlin Smith.—I want to say that I agree entirely with Professor Sweet in thinking that a good many tapping holes in cast iron and other metals should be chambered out at the bottom. Then we have a clear hole, just the same as if it went entirely through a thin plate. Instead of using a "wobble-drill," as described, I used to take an ordinary flat drill and grind out a little notch on the corner of the grindstone. By grinding one lip away more than the other, thus throwing the center over, you get in effect what Professor Sweet speaks of as a "wobble-drill." This eccentric point striking the center of the hole as already drilled will throw the drill over gradually, and the projecting point will cut the chambering of the hole. This worked very well in the old-fashioned and aged drill-presses, because their spindles were generally an eighth of inch loose, but in some of our modern drill-presses we cannot obtain the necessary wobble. Here is a device that I got up two or three years ago (Fig. 72); a steel bar, perfectly plain,

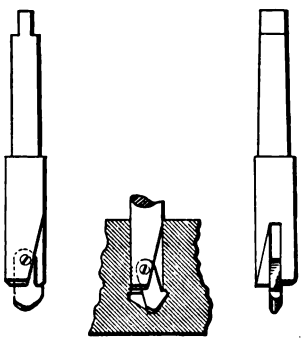

Fig. 72.

the diameter of the tapping-drill, with a little slot that went nearly through from one side, in which was a small steel cutter hung on a pivot. As soon as this is forced down in the bottom of a hole, this point strikes the conical surface of the hole and creeps over to the position shown in the second sketch, so that it cuts out a chamber of the kind desired. The whole thing runs true and does just what you want it to do. [Applause.]

Prof. Sweet.—I can hardly admit what friend Smith would imply—that we use the old-fashioned drill. We do not make the drill as he has indicated, neither do we finish the hole as he has indicated. We depend upon the elasticity of the shank to spring what little is necessary. Fig. 90 shows the form of the tool. With such a tool, the hole has the appearance at the bottom shown

that the studs and bolts will interchange; but in regard to iron, I have not yet been able with standard taps to make s or standing bolts that will interchange between cast iron wrought iron, or between cast iron and steel. The diffic seems to be that when we tap a hole in cast iron the finis hole is perceptibly larger than the tap. What I wanted to se was one size of screw thread for everything, that is, the s bolt to interchange indifferently in any part of the machine in any material; that I find is not practicable, and we have g it up. Now the trouble with an ordinary drill is, that it alv drills a hole larger than itself, and the reason for that is ma in the grinding. I have tested quite a number of twist-grinding machines, and I only know of one that will grind a which will drill a hole through a piece of metal without perceptible enlargement of the size of the hole over that of drill, and that is because the machine has a center grin attachment by the use of which we are sure that the center of drill is so ground that it is equidistant from all parts of the cumference. Apart from the drilling, we do not find it practic to use the same size for threads, but are obliged to have sizes for the same nominal size of standing bolt or stud, that say, the standing bolts or studs, that are made to fit into cast have to be slightly larger in diameter of thread than those fit into wrought iron tapped holes. This is a subject w interests all machine builders, it is a very important one, and which ought to receive consideration in our society, because, is necessary to have two sizes, I think that we might perhaps throwing our experiences together, fix upon what sizes are ne sary for cast iron, and see what can be done by suggestin standard covering ordinary service.

Mr. Oberlin Smith.—It seems to me that Mr. Barr has ado two standards, two diameters for his studs; one for those w go into cast iron and the other for those which go into wro iron. To do that he has to have two sets of finishing dies w give the final size and compass of studs. Why wouldn't i just as easy to have lots of studs all alike and have two kind taps, and then he would only have one standard? If a tap ma cast iron larger,—if that is the case that a tap will cut a larger in cast iron than in wrought iron, why not have a slightly sm tap for the cast iron, so that the final result would be the sam the two materials? I doubt not the tap makers like Mr. E

will make those two standards when we find out how much difference there ought to be in them, or perhaps by the taps that are made, and which differ slightly on account of the little differences in tempering, etc.—perhaps there are some given number of standard taps some of which could be selected slightly smaller, which could be laid aside for cast iron taps, and those which had been used might be kept for cast iron, and those new only for wrought iron.

Prof. Sweet.—I wish to ask Mr. Barr whether the tapped holes go through or bottom in the iron.

Mr. Barr.—They do not go through.

Prof. Sweet.—Have you ever tried the plan of chambering out the hole? While I am not able to say that we get all holes of a size, we find chambering out the holes to be a very good arrangement indeed. We call the tool used in that way the "wobble drill." I do not know that any one uses them but ourselves, but they would if they knew their value and they could be found for sale.

Mr. Whitehead.—I would like to ask Mr. Barr what difference he would expect there would be in tapping steel and in tapping cast iron.

Mr. Barr.—I have not measured that. The question of taps and dies resolves itself into this: the Pratt & Whitney Co. have brought out a standard thread and a gauge, and that is the thing we work by; if two sizes of taps are used the one size may be too large and the other may be too small. There is no certainty that they will do what is expected of them at all; but a die is a variable thing. You can get almost any diameter out of a die. Now if you have a standard tap it is a very easy matter to so adjust the dies that you can get a proper diameter for screwing into cast iron. Therefore I am of an opinion that it is not a good plan to have two sizes of taps. Now in regard to tapping through cast iron, most of our work does not go through; most of it goes in one and one-half diameters, and there we stop. We do not do the chambering that Professor Sweet speaks of, but we do run the drill down a little further, so that when we screw in the bottoming tap it does not crowd on the taper that is left in the bottom of the hole by the taper tap. Now, what was your question, Mr. Whitehead?

Mr. Whitehead.—My question was what difference would you expect it to be in a screw tap of cast iron and one of steel tapping the same metal?

Mr. Barr.—That I cannot say; all I know is that using the same standard, the Pratt & Whitney standard, we will say, one that will fit in a hole tapped in steel, will be too loose to pass inspection in a hole tapped in cast iron. What the difference is I do not know. The only thing I do know is that the work will not pass inspection.

Mr. Whitehead.—I should think that would apply more particularly to gauge work.

Mr. Barr.—No, sir, it would not; it applies to our regular, every-day work.

Mr. Bond.—It seems to me that the trouble due to the variation of size of tapped holes drilled in cast and wrought iron depends largely on the character of the tap used, because in the use of a new form of tap which has been made by us for some years for locomotive work, in which a "division of labor" is secured, the use of three taps, the first having only about one-third the depth of the U. S. Standard thread, the second about two-thirds, and the third tap the finishing size, thus dividing the work of the complete tapping equally between the three, greater uniformity has resulted in the size of the finished holes, and the loss in breakage of taps reduced to a minimum.

This form of tap is well liked by locomotive builders, and it seems to more nearly fulfill the requirements for cast iron, steel and wrought iron than the old system of using the taper, plug and bottoming taps, so familiar to all iron-workers and machinists. With these taps there is less of the crowding which tends to change the "lead" of the thread or of wearing out the thread in cast iron tapped holes.

I think taps made this way—and we are making many of them —would work as nearly uniform in different metals as it is possible to have them, and with the bolts and taps made carefully to standard gauges practical interchangeability will be readily secured.

Mr. O. C. Woolson.—I would ask Mr. Barr if the method of tapping in cast iron was the same as used in tapping wrought iron and steel? The practice in some shops of using a guide in starting a tap, in fact keeping a guide there until the tapping is finished, in a large majority of work, is a very practicable one. You suggest that to a common mechanic and he does not like it; but I will suggest this, that in tapping cast iron the quicker and smoother and truer you can get your tap in and get it out the

tighter your bolts are going to fit. In tapping with power there should be a certain amount of flexibility between spindle and tap. The wobbling of the tap without a guide will cut the cast iron hole out a little more than you want very quickly, although you may hardly appreciate that you are enlarging that hole. It is possible to make a fit with the same tap tighter in cast iron than in wrought iron, under certain conditions of workmanship.

Mr. Oberlin Smith.—I want to say that I agree entirely with Professor Sweet in thinking that a good many tapping holes in cast iron and other metals should be chambered out at the bottom. Then we have a clear hole, just the same as if it went entirely through a thin plate. Instead of using a "wobble-drill," as described, I used to take an ordinary flat drill and grind out a little notch on the corner of the grindstone. By grinding one lip away more than the other, thus throwing the center over, you get in effect what Professor Sweet speaks of as a "wobble-drill." This eccentric point striking the center of the hole as already drilled will throw the drill over gradually, and the projecting point will cut the chambering of the hole. This worked very well in the old-fashioned and aged drill-presses, because their spindles were generally an eighth of inch loose, but in some of our modern drill-presses we cannot obtain the necessary wobble. Here is a device that I got up two or three years ago (Fig. 72); a steel bar, perfectly plain, the diameter of the tapping-drill, with a little slot that went nearly through from one side, in which was a small steel cutter hung on a pivot. As soon as this is forced down in the bottom of a hole, this point strikes the conical surface of the hole and creeps over to the position shown in the second sketch, so that it cuts out a chamber of the kind desired. The whole thing runs true and does just what you want it to do. [Applause.]

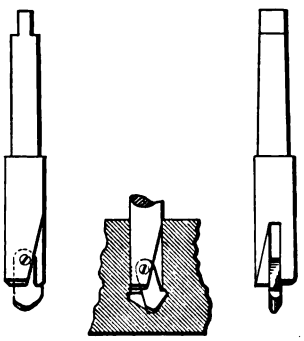

Fig. 72.

Prof. Sweet.—I can hardly admit what friend Smith would imply—that we use the old-fashioned drill. We do not make the drill as he has indicated, neither do we finish the hole as he has indicated. We depend upon the elasticity of the shank to spring what little is necessary. Fig. 90 shows the form of the tool. With such a tool, the hole has the appearance at the bottom shown

in Fig. 91, so that the stud and the taps will run down considerably farther in a hole of the same depth than they will in a hole left by an ordinary drill. I would say, also, that the three-tap system explained by Mr. Bond is the kind we have always used at the Straight Line Engine Works, and we started our business in 1880.

Fig. 91.

Fig. 90.

Mr. Oberlin Smith.—I know Prof. Sweet has saved a little extra depth of cast iron (from one-tenth to one-eighth of an inch), but where you have not much room up and down and want to put the chambering device in the place of a short tapping drill you have been using, without changing the height of your drill press, his long drill may not be so convenient. I thank him, however, for rubbing out my old wobble-drill, which I did not bring forward as a triumph of engineering, but only to show what the boys used to make.

Mr. J. F. Holloway.—I think one point has been overlooked in the discussion of this matter, and that is the uses of the holes to be tapped. Ordinarily, where cast iron is tapped, it is for the purpose of inserting a stud which, once put in, is expected to remain therein. Where wrought iron or steel is tapped, it is usually to go on a stud bolt or on a machine bolt, where it is to be taken off frequently, and must necessarily have an amount of freedom and a difference of diameter that will enable the nut to be taken off without chafing the thread. Now, in tapping cast iron in ordinary practice, it has been the custom not to make a full thread, for the reason that the thread is somewhat more apt to crumble, but to tap it with the same tap which you may use for another purpose, and to enlarge the end of the stud somewhat, so that it will be crowded into the hole, into which it is expected to be driven but once, and never to be taken out. In that way you can use taps of the same dimensions, simply enlarging the end of the stud slightly, which is screwed into the terminal place. Now, if the bolt was to be screwed into the cast iron, and taken out frequently, the area of the side of the thread being reduced very much, it would soon wear itself loose, and you could not use the same diameter of hole, or the same depth of thread in cast iron as you could in wrought iron for that reason; but ordinarily, holes tapped in cast iron are used for studs, which once screwed in are

expected to remain permanently. So, it seems to me, it is quite difficult to make a just and fair comparison of the use of taps in various materials, unless you take into account the purposes for which holes tapped are to be used.

Mr. Oberlin Smith.—If I may make a little remark, Mr. President, I agree with Mr. Holloway regarding the differences of conditions which exist in this matter. We know that a wrought-iron nut one inch thick is all right, and the Sellers formula shows that even if it was $\frac{3}{8}$ths of that amount it would be strong enough, so that we have a surplus of over 100 per cent., but in cast iron we should have still more, and an inch bolt should go more than one inch into cast iron. My rule is to go $1\frac{1}{2}$ inches deep, with a liberal extra depth in the hole for clearance—say $\frac{3}{4}$ inch. If the tap has cut the cast iron a shade larger, we can always make that difference up by lengthening the thread, which is a very simple matter —only making the bolt longer. Practically it fits a little tighter than a short thread, because the pitches are not absolutely uniform. Hence a bolt with a tolerably long thread will fit pretty tight, about as tight as it would in a thinner wrought-iron nut, and it makes a very good job, especially if the holes are chambered out. As to the matter of studs, which are put in permanently, it is all right to do it in several different ways: either to have a special thread of a tapering form; or to make the studs a little larger and force them in; or not to chamber the hole and not tap it quite to depth, and then let the stud jam in and smash the threads down near the end, and so be held firmly. But, as I understand Mr. Barr's description of his studs, he wants them to be interchangeable, so that he can sell them to people separately, and they can easily take them out of the castings and put in others. That is all right, and ought to be so. In such a case, I think he could get over the trouble of their fitting loosely in cast iron by running them in deeper. If he cannot do that, I should certainly say the best way was to select taps slightly smaller for the cast iron (having some distinctive mark on them)—either those that have been worn a little, or those accidentally somewhat smaller in the first place—and thus not have two diameters of studs. I know there is some difference in even the best of new taps, and it would be easy to select from a considerable stock some that would be small enough.

Mr. Bond.—I do not think there would be any trouble in finding a market for those taps.

eleven-sixteenths or three-quarters inch—I do not know of any rules for getting at the proper drilling sizes, as each kind of metal would require to be drilled differently. I find it very convenient to have a table with both exact size and drilling size printed on same sheet for shop use.

For gauge work we use the exact size and for ordinary work the drilling size. I did not know how the Pratt & Whitney Co. obtained their drilling sizes, so I tried to procure them by drilling different sized holes, tapping each with a standard tap and then examining thread with microscope. After making several tests I found the drilling sizes which I got were so near to the Pratt & Whitney sizes that we continued using their table for some time. We are now using the same with the exception of a few sizes such as previously mentioned.

We make thousands of studs, and rarely hear of any complaints from them. No doubt the threads are jammed a trifle when inserted, and the slight imperfections in pitch and size of thread are hardly percep ible.

The taps and dies are wearing more or less and consequently we must have one or two thousandths of an inch limit for practical work.

Mr. Geo. M. Bond.—I would like to say in regard to our practice that it is simply the range of sizes to which Mr. Whitehead referred that was adopted arbitrarily. The iszes adopted were for the quarter-inch United States Standard thread, Sellers' system, to be the size of the tap drill which would be 0.004 of an inch larger than exact diameter at the root of the thread for one-quarter inch bolts or screws, increasing gradually by differences, found by experience in our tool room to be about right, up to 0.010 for an inch bolt or screw. This gives good tap drill sizes for cast iron; but if holes are to be tapped requiring complete threads; that is, a full thread of 60 degrees in the angle, and flat top and bottom one-eighth of the pitch, then of course the exact root diameters of the different size bolts, according to the Sellers' formula for the tap-drills, must be used instead.

For cast iron, the holes should be large enough to prevent the bottom of the thread of the bolt crowding against the top of the thread in the tapped hole, as the latter is likely to crumble and occasion trouble when the bolt is to be unscrewed; but for wrought iron and steel, drills may be used which are more nearly the exact diameter of the root of the thread, though a little clearance in this respect is not a disadvantage.

So far as I know, there is no formula for determining this practical clearance diameter for the different metals, though one might readily be deduced, while, for the sizes mentioned, the arbitrary range of differences seems to cover the ground for either cast iron, steel or wrought iron.

Mr. Oberlin Smith.—We all know that, in order to get good results, we drill the hole in cast iron rather larger than the diameter of the bottom of the tap. Now cast iron is weaker than wrought iron or steel. We usually put in cast iron a longer tapped hole than we do in wrought iron, and yet we put less depth of thread there, for this incidental reason of "crumbling." We are making the thread weaker by construction, although the material is weaker to start with. It seems to me that we ought to make these tapping holes in cast iron just as small as we possibly can, so as to get the proper clearance. The allowance Mr. Bond speaks of is undoubtedly a good enough one, unless we should, for greater convenience and ease of remembering, take a constant for that difference, for instance a constant of three or four thousandths, or perhaps even two thousandths would be sufficient. We should adopt some such constant, or some series of figures, as a regular standard, and work to it, just as much as we should have standards regarding the threads themselves But I do not think that we ought to make a difference in this constant or series for wrought iron and steel and such stronger metals, and thus have a confusion of tapping-drill sizes. We should not have one tapping size for brass, and one for steel, and one for wrought iron, and one for cast iron, thus making great trouble and confusion, but we should have one standard for all materials. Steel and wrought iron, naturally, have stronger threads than does cast iron, and this enables us to use shorter nuts without needing the little additional advantage gained by being able to make the thread slightly deeper, because it will not crumble. In regard to having a standard with different tapping-drill sizes for different materials, I should certainly deprecate such action very strongly, on account of the great number of different drills necessary, and the number of standards to be recorded.

Mr. W. M. Barr.—I have just been experimenting with this very thing, and these experiments extended over several months. I do not find that the trouble is nearly so much with the drill as it is with the tap. There is no difficulty whatever in drilling and tapping holes in wrought iron or steel which will be all right, so

that the studs and bolts will interchange; but in regard to cast iron, I have not yet been able with standard taps to make studs or standing bolts that will interchange between cast iron and wrought iron, or between cast iron and steel. The difficulty seems to be that when we tap a hole in cast iron the finished hole is perceptibly larger than the tap. What I wanted to secure was one size of screw thread for everything, that is, the same bolt to interchange indifferently in any part of the machine and in any material; that I find is not practicable, and we have given it up. Now the trouble with an ordinary drill is, that it always drills a hole larger than itself, and the reason for that is mainly in the grinding. I have tested quite a number of twist-drill grinding machines, and I only know of one that will grind a drill which will drill a hole through a piece of metal without any perceptible enlargement of the size of the hole over that of the drill, and that is because the machine has a center grinding attachment by the use of which we are sure that the center of the drill is so ground that it is equidistant from all parts of the circumference. Apart from the drilling, we do not find it practicable to use the same size for threads, but are obliged to have two sizes for the same nominal size of standing bolt or stud, that is to say, the standing bolts or studs, that are made to fit into cast iron, have to be slightly larger in diameter of thread than those that fit into wrought iron tapped holes. This is a subject which interests all machine builders, it is a very important one, and one which ought to receive consideration in our society, because, if it is necessary to have two sizes, I think that we might perhaps, by throwing our experiences together, fix upon what sizes are necessary for cast iron, and see what can be done by suggesting a standard covering ordinary service.

Mr. Oberlin Smith.—It seems to me that Mr. Barr has adopted two standards, two diameters for his studs; one for those which go into cast iron and the other for those which go into wrought iron. To do that he has to have two sets of finishing dies which give the final size and compass of studs. Why wouldn't it be just as easy to have lots of studs all alike and have two kinds of taps, and then he would only have one standard? If a tap makes cast iron larger,—if that is the case that a tap will cut a larger hole in cast iron than in wrought iron, why not have a slightly smaller tap for the cast iron, so that the final result would be the same in the two materials? I doubt not the tap makers like Mr. Bond

will make those two standards when we find out how much difference there ought to be in them, or perhaps by the taps that are made, and which differ slightly on account of the little differences in tempering, etc.—perhaps there are some given number of standard taps some of which could be selected slightly smaller, which could be laid aside for cast iron taps, and those which had been used might be kept for càst iron, and those new only for wrought iron.

Prof. Sweet.—I wish to ask Mr. Barr whether the tapped holes go through or bottom in the iron.

Mr. Barr.—They do not go through.

Prof. Sweet.—Have you ever tried the plan of chambering out the hole? While I am not able to say that we get all holes of a size, we find chambering out the holes to be a very good arrangement indeed. We call the tool used in that way the "wobble drill." I do not know that any one uses them but ourselves, but they would if they knew their value and they could be found for sale.

Mr. Whitehead.—I would like to ask Mr. Barr what difference he would expect there would be in tapping steel and in tapping cast iron.

Mr. Barr.—I have not measured that. The question of taps and dies resolves itself into this: the Pratt & Whitney Co. have brought out a standard thread and a gauge, and that is the thing we work by; if two sizes of taps are used the one size may be too large and the other may be too small. There is no certainty that they will do what is expected of them at all; but a die is a variable thing. You can get almost any diameter out of a die. Now if you have a standard tap it is a very easy matter to so adjust the dies that you can get a proper diameter for screwing into cast iron. Therefore I am of an opinion that it is not a good plan to have two sizes of taps. Now in regard to tapping through cast iron, most of our work does not go through; most of it goes in one and one-half diameters, and there we stop. We do not do the chambering that Professor Sweet speaks of, but we do run the drill down a little further, so that when we screw in the bottoming tap it does not crowd on the taper that is left in the bottom of the hole by the taper tap. Now, what was your question, Mr. Whitehead?

Mr. Whitehead.—My question was what difference would you expect it to be in a screw tap of cast iron and one of steel tapping the same metal?

Mr. Barr.—That I cannot say; all I know is that using the same standard, the Pratt & Whitney standard, we will say, one that will fit in a hole tapped in steel, will be too loose to pass inspection in a hole tapped in cast iron. What the difference is I do not know. The only thing I do know is that the work will not pass inspection.

Mr. Whitehead.—I should think that would apply more particularly to gauge work.

Mr. Barr.—No, sir, it would not; it applies to our regular, every-day work.

Mr. Bond.—It seems to me that the trouble due to the variation of size of tapped holes drilled in cast and wrought iron depends largely on the character of the tap used, because in the use of a new form of tap which has been made by us for some years for locomotive work, in which a "division of labor" is secured, the use of three taps, the first having only about one-third the depth of the U. S. Standard thread, the second about two-thirds, and the third tap the finishing size, thus dividing the work of the complete tapping equally between the three, greater uniformity has resulted in the size of the finished holes, and the loss in breakage of taps reduced to a minimum.

This form of tap is well liked by locomotive builders, and it seems to more nearly fulfill the requirements for cast iron, steel and wrought iron than the old system of using the taper, plug and bottoming taps, so familiar to all iron-workers and machinists. With these taps there is less of the crowding which tends to change the "lead" of the thread or of wearing out the thread in cast iron tapped holes.

I think taps made this way—and we are making many of them —would work as nearly uniform in different metals as it is possible to have them, and with the bolts and taps made carefully to standard gauges practical interchangeability will be readily secured.

Mr. O. C. Woolson.—I would ask Mr. Barr if the method of tapping in cast iron was the same as used in tapping wrought iron and steel? The practice in some shops of using a guide in starting a tap, in fact keeping a guide there until the tapping is finished, in a large majority of work, is a very practicable one. You suggest that to a common mechanic and he does not like it; but I will suggest this, that in tapping cast iron the quicker and smoother and truer you can get your tap in and get it out the

tighter your bolts are going to fit. In tapping with power there should be a certain amount of flexibility between spindle and tap. The wobbling of the tap without a guide will cut the cast iron hole out a little more than you want very quickly, although you may hardly appreciate that you are enlarging that hole. It is possible to make a fit with the same tap tighter in cast iron than in wrought iron, under certain conditions of workmanship.

Mr. Oberlin Smith.—I want to say that I agree entirely with Professor Sweet in thinking that a good many tapping holes in cast iron and other metals should be chambered out at the bottom. Then we have a clear hole, just the same as if it went entirely through a thin plate. Instead of using a "wobble-drill," as described, I used to take an ordinary flat drill and grind out a little notch on the corner of the grindstone. By grinding one lip away more than the other, thus throwing the center over, you get in effect what Professor Sweet speaks of as a "wobble-drill." This eccentric point striking the center of the hole as already drilled will throw the drill over gradually, and the projecting point will cut the chambering of the hole. This worked very well in the old-fashioned and aged drill-presses, because their spindles were generally an eighth of inch loose, but in some of our modern drill-presses we cannot obtain the necessary wobble. Here is a device that I got up two or three years ago (Fig. 72); a steel bar, perfectly plain, the diameter of the tapping-drill, with a little slot that went nearly through from one side, in which was a small steel cutter hung on a pivot. As soon as this is forced down in the bottom of a hole, this point strikes the conical surface of the hole and creeps over to the position shown in the second sketch, so that it cuts out a chamber of the kind desired. The whole thing runs true and does just what you want it to do. [Applause.]

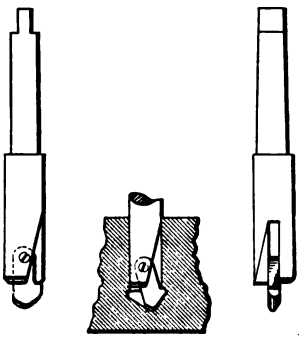

Fig. 72.

Prof. Sweet.—I can hardly admit what friend Smith would imply—that we use the old-fashioned drill. We do not make the drill as he has indicated, neither do we finish the hole as he has indicated. We depend upon the elasticity of the shank to spring what little is necessary. Fig. 90 shows the form of the tool. With such a tool, the hole has the appearance at the bottom shown

in Fig. 91, so that the stud and the taps will run down considerably farther in a hole of the same depth than they will in a hole left by an ordinary drill. I would say, also, that the three-tap system explained by Mr. Bond is the kind we have always used at the Straight Line Engine Works, and we started our business in 1880.

Fig. 91.

Fig. 90.

Mr. Oberlin Smith.—I know Prof. Sweet has saved a little extra depth of cast iron (from one-tenth to one-eighth of an inch), but where you have not much room up and down and want to put the chambering device in the place of a short tapping drill you have been using, without changing the height of your drill press, his long drill may not be so convenient. I thank him, however, for rubbing out my old wobble-drill, which I did not bring forward as a triumph of engineering, but only to show what the boys used to make.

Mr. J. F. Holloway.—I think one point has been overlooked in the discussion of this matter, and that is the uses of the holes to be tapped. Ordinarily, where cast iron is tapped, it is for the purpose of inserting a stud which, once put in, is expected to remain therein. Where wrought iron or steel is tapped, it is usually to go on a stud bolt or on a machine bolt, where it is to be taken off frequently, and must necessarily have an amount of freedom and a difference of diameter that will enable the nut to be taken off without chafing the thread. Now, in tapping cast iron in ordinary practice, it has been the custom not to make a full thread, for the reason that the thread is somewhat more apt to crumble, but to tap it with the same tap which you may use for another purpose, and to enlarge the end of the stud somewhat, so that it will be crowded into the hole, into which it is expected to be driven but once, and never to be taken out. In that way you can use taps of the same dimensions, simply enlarging the end of the stud slightly, which is screwed into the terminal place. Now, if the bolt was to be screwed into the cast iron, and taken out frequently, the area of the side of the thread being reduced very much, it would soon wear itself loose, and you could not use the same diameter of hole, or the same depth of thread in cast iron as you could in wrought iron for that reason; but ordinarily, holes tapped in cast iron are used for studs, which once screwed in are

expected to remain permanently. So, it seems to me, it is quite difficult to make a just and fair comparison of the use of taps in various materials, unless you take into account the purposes for which holes tapped are to be used.

Mr. Oberlin Smith.—If I may make a little remark, Mr. President, I agree with Mr. Holloway regarding the differences of conditions which exist in this matter. We know that a wrought-iron nut one inch thick is all right, and the Sellers formula shows that even if it was $\frac{3}{8}$ths of that amount it would be strong enough, so that we have a surplus of over 100 per cent., but in cast iron we should have still more, and an inch bolt should go more than one inch into cast iron. My rule is to go $1\frac{1}{2}$ inches deep, with a liberal extra depth in the hole for clearance—say $\frac{3}{4}$ inch. If the tap has cut the cast iron a shade larger, we can always make that difference up by lengthening the thread, which is a very simple matter —only making the bolt longer. Practically it fits a little tighter than a short thread, because the pitches are not absolutely uniform. Hence a bolt with a tolerably long thread will fit pretty tight, about as tight as it would in a thinner wrought-iron nut, and it makes a very good job, especially if the holes are chambered out. As to the matter of studs, which are put in permanently, it is all right to do it in several different ways: either to have a special thread of a tapering form; or to make the studs a little larger and force them in; or not to chamber the hole and not tap it quite to depth, and then let the stud jam in and smash the threads down near the end, and so be held firmly. But, as I understand Mr. Barr's description of his studs, he wants them to be interchangeable, so that he can sell them to people separately, and they can easily take them out of the castings and put in others. That is all right, and ought to be so. In such a case, I think he could get over the trouble of their fitting loosely in cast iron by running them in deeper. If he cannot do that, I should certainly say the best way was to select taps slightly smaller for the cast iron (having some distinctive mark on them)—either those that have been worn a little, or those accidentally somewhat smaller in the first place—and thus not have two diameters of studs. I know there is some difference in even the best of new taps, and it would be easy to select from a considerable stock some that would be small enough.

Mr. Bond.—I do not think there would be any trouble in finding a market for those taps.

Mr. F. H. Richards.—Respecting the use in succession of a series of taps of different sizes, I remember seeing such sets in use in one shop as long ago as 1866. I think they have been in constant use ever since, not only in that shop but in many others. The trouble is that the taps cost too much, and that there is too much variation made in their pitch by hardening. This, I think, is one reason why they have not been more generally adopted.

Mr. Woolson.—I have gauged a good many of the taps that are on the market, and find in an angle measurement that they vary from $\frac{1}{1000}$th to $\frac{3}{1000}$ths of an inch, and it is very difficult to tell what a man is using unless we go right out there and measure his taps. Then, after he has used his taps a little while, the corners will certainly wear off, and I believe he will not tap a great many hundred nuts before he will find that the difference will be fully as much as the difference between tapping in cast iron and tapping in steel. Mr. Barr has not answered my question, and I want to ask one more, that is, Does he use oil in drilling for the tap in cast iron, or does he drill it dry? The use of oil on cast iron drilling is desirable on most work.

Mr. Barr.—I had quite forgotten the first question. Would you mind stating it again?

Mr. Woolson.—Whether you used a guide in driving your taps.

Mr. Barr.—We do the tapping in the same machine that we do the drilling and at the same time, that is to say, we drill a hole and then we tap it. We do not tap the hole immediately after it has been drilled, but the holes are tapped before the piece is removed from the machine. Now, in regard to tapping a hole in cast iron and using oil, it is our practice to use oil; but, aside from that, I believe I have never seen a hole tapped in cast iron that was of the same size that would be made by the same tap tapping a wrought-iron nut. It may be done, but I have not seen it. Commercially, I do not believe it could be done. It might be done where very careful precautions are taken to have the tap sharp and exactly vertical and the holes exactly round and the tap well guided, but I am speaking now of ordinary shop work, not the little niceties of a machine-shop experiment, but the ordinary shop usage.

Mr. Oberlin Smith.—I want to ask whether those taps that cut large are rigidly fastened, or are they connected by a joint, something like a universal joint, or a wobbler?

Mr. Barr.—Do you mean the tap wobbling about?

Mr. Obe .—Is the tap rigidly fastened to the drill-press spindle, so that, if that wobbles slighty, it can be thrown around and enlarge the hole?

Mr. Barr.—If it were rigid, you could not tap a hole either on size or any other way. There must be a certain amount of flexibility, or the tap will not do good work.

Mr. Oberlin Smith.—Is that flexibility on the principle of a universal joint, or is that only slightly so in the socket that holds it?

Mr. Barr.—Oh, not at all. The taps have square shanks which fit loosely in the socket by which they are driven.

Mr. Oberlin Smith.—If it is fixed on the principle of two universal joints between the drill press and the tap, then the tap would be apt to follow and make a hole pretty near its own size.

Mr. Barr.—Try that when you get home.

Mr. Oberlin Smith.—I have tried it too often already.

No. 329-71.

What is the best method of preventing variation in pitch of screw-threads, as cut by dies in the screw-machine, resulting from irregular stretching or flow of the metal, caused by the action of the dies when operating upon large numbers of comparatively long screws of small diameter?

Mr. Geo. E. Whitehead.—The best method I know of is to make the length of dies two to three times the diameter of the screw you wish to cut, and use plenty of lubricant to keep the metal cool while threading. There is one thing which will change the pitch considerably, and that is the grinding or sharpening the face of the die. If ground irregularly, or if the face of the die gets dull, or if, in a four-prong die, three teeth cut and one does not—either of these defects will change the pitch. The best results are obtained, however, by re-sizing with a long die.

PAPERS

OF THE

ERIE MEETING

(XIXth),

MAY, 1889.

PAPERS

OF THE

ERIE MEETING

(XIXth),

MAY, 1889.

CCCXXX.

PROCEEDINGS

OF THE

ERIE MEETING

(XIXth)

OF THE

AMERICAN SOCIETY OF MECHANICAL ENGINEERS.

May 14th to 17th, 1889.

LOCAL COMMITTEE OF ARRANGEMENTS :—F. A. Scheffler, F. H. Ball, H. R. Barnhurst, J. K. Hallock, W. Hardwicke, J. S. Miller, George Selden, L. G. Skinner, H. F. Watson, Wm. Wilkin.

FIRST DAY, TUESDAY, MAY 14TH.

THE opening session of the XIXth Convention of the American Society of Mechanical Engineers was called to order at eight o'clock in the evening of Tuesday, May 14th, by President Henry R. Towne of the Society. The sessions were held in the rooms of the Board of Trade of Erie.

Mr. F. A. Scheffler of the Local Committee of Arrangements introduced Mr. Charles S. Clark, Mayor of Erie, who welcomed the Society to his city on behalf of the citizens. President Towne briefly responded for the Society.

Mr. Horace See, of Philadelphia, Pa., then presented his Annual Address, which it had been impossible for him to deliver at the usual time at the opening of the annual meeting at Scranton. It is published, for this reason, as one of the papers of this meeting.

At its close, a social reunion was held in the Board of Trade rooms, presided over by the ladies of Erie.

CCCXXX.

PROCEEDINGS

OF THE

ERIE MEETING

(XIXth)

OF THE

AMERICAN SOCIETY OF MECHANICAL ENGINEERS.

May 14th to 17th, 1889.

LOCAL COMMITTEE OF ARRANGEMENTS :—F. A. Scheffler, F. H. Ball, H. R. Barnhurst, J. K. Hallock, W. Hardwicke, J. S. Miller, George Selden, L. G. Skinner, H. F. Watson, Wm. Wilkin.

FIRST DAY, TUESDAY, MAY 14TH.

THE opening session of the XIXth Convention of the American Society of Mechanical Engineers was called to order at eight o'clock in the evening of Tuesday, May 14th, by President Henry R. Towne of the Society. The sessions were held in the rooms of the Board of Trade of Erie.

Mr. F. A. Scheffler of the Local Committee of Arrangements introduced Mr. Charles S. Clark, Mayor of Erie, who welcomed the Society to his city on behalf of the citizens. President Towne briefly responded for the Society.

Mr. Horace See, of Philadelphia, Pa., then presented his Annual Address, which it had been impossible for him to deliver at the usual time at the opening of the annual meeting at Scranton. It is published, for this reason, as one of the papers of this meeting.

At its close, a social reunion was held in the Board of Trade rooms, presided over by the ladies of Erie.

CCCXXX.

PROCEEDINGS

OF THE

ERIE MEETING

(XIXth)

OF THE

AMERICAN SOCIETY OF MECHANICAL ENGINEERS.

May 14th to 17th, 1889.

LOCAL COMMITTEE OF ARRANGEMENTS :—F. A. Scheffler, F. H. Ball, H. R. Barnhurst, J. K. Hallock, W. Hardwicke, J. S. Miller, George Selden, L. G. Skinner, H. F. Watson, Wm. Wilkin.

FIRST DAY, TUESDAY, MAY 14TH.

THE opening session of the XIXth Convention of the American Society of Mechanical Engineers was called to order at eight o'clock in the evening of Tuesday, May 14th, by President Henry R. Towne of the Society. The sessions were held in the rooms of the Board of Trade of Erie.

Mr. F. A. Scheffler of the Local Committee of Arrangements introduced Mr. Charles S. Clark, Mayor of Erie, who welcomed the Society to his city on behalf of the citizens. President Towne briefly responded for the Society.

Mr. Horace See, of Philadelphia, Pa., then presented his Annual Address, which it had been impossible for him to deliver at the usual time at the opening of the annual meeting at Scranton. It is published, for this reason, as one of the papers of this meeting.

At its close, a social reunion was held in the Board of Trade rooms, presided over by the ladies of Erie.

CCCXXX.

PROCEEDINGS

OF THE

ERIE MEETING

(XIXth)

OF THE

AMERICAN SOCIETY OF MECHANICAL ENGINEERS.

May 14th to 17th, 1889.

LOCAL COMMITTEE OF ARRANGEMENTS :—F. A. Scheffler, F. H. Ball, H. R. Barnhurst, J. K. Hallock, W. Hardwicke, J. S. Miller, George Selden, L. G. Skinner, H. F. Watson, Wm. Wilkin.

FIRST DAY, TUESDAY, MAY 14TH.

THE opening session of the XIXth Convention of the American Society of Mechanical Engineers was called to order at eight o'clock in the evening of Tuesday, May 14th, by President Henry R. Towne of the Society. The sessions were held in the rooms of the Board of Trade of Erie.

Mr. F. A. Scheffler of the Local Committee of Arrangements introduced Mr. Charles S. Clark, Mayor of Erie, who welcomed the Society to his city on behalf of the citizens. President Towne briefly responded for the Society.

Mr. Horace See, of Philadelphia, Pa., then presented his Annual Address, which it had been impossible for him to deliver at the usual time at the opening of the annual meeting at Scranton. It is published, for this reason, as one of the papers of this meeting.

At its close, a social reunion was held in the Board of Trade rooms, presided over by the ladies of Erie.

Second Day, Wednesday, May 15th.

The second session was called to order at ten o'clock in th morning. The Secretary's register showed the following membei in attendance during the sessions of the Convention:

Ashworth, Daniel.....Pittsburgh, Pa.
Ball, Frank H .....Erie, Pa.
Barnes, A. T.....Boston, Mass.
Barnhurst, H. R .....Erie, Pa.
Baugh, S. A .....Detroit, Mich.
Betts, Alfred .....Wilmington, Del.
Bole, W. A.....Pittsburgh, Pa.
Bray, Chas. W.....Youngstown, O.
Burns, A. L .....New York city.
Clark, Walter L .....New York city.
Cloud, Jno. W.....Buffalo, N. Y.
Cooper, Jno. H .....Philadelphia, Pa.
Creelman, Wm. J .....Rochester, N. Y.
Davis, E. F. C.....Pottsville, Pa.
Denton, James E.....Hoboken, N. J.
Dick, John .....Meadville, Pa.
Doran, W. S.....New York city.
Dutton, C. Seymour .....Youngstown, O
Fawcett, Ezra .....Alliance, O.
Field, C. J.....Brooklyn, N. Y.
Firestone, J. F.....Columbus, O.
Gilmore, Robt. J.....Providence, R. I.
Gilkerson, J. A.....Homer, N. Y.
Gobeille, Jos. Leon.....Cleveland, O.
Hallock, J. K.....Erie, Pa.
Hardwicke, Wm .....Erie, Pa.
Hemenway, F. F.....New York city.
Herman, Ludwig.....Cleveland, O.
Higgins, Samuel .....Meadville, Pa.
Hornig, Julius L.....Jersey City, N. J.
Hughes, E. W. M.....Chicago, Ill.
Hutton, Fred'k R. (*Secretary*) .....New York city.
Ide, A. L .....Springfield, Ill.
Jenks, W. H.....Brookville, Pa.
Jones, Willis C .....Cincinnati, O.
Kirkevaag, Peter.....Youngstown, O.
Low, F. R.....New York city.
McEwen, J. H .....Ridgway, Pa.
MacDuffie, C. D.....Manchester, N. H.
McRae, J. D.....Baldwinsville, N. Y.
MacFarren, S. J .....McKeesport, Pa.
Manning, Chas. H.....Manchester, N. H.
Mansfield, A. K.....Salem, O.
Miller, T. Spencer .....New York city.
Miller, Walter.....Cleveland, O.

Moore, Enos L ..... Portsmouth, O.
Morgan, Thos. R., Jr ..... Alliance, O.
Morse, Chas. M ..... Buffalo, N. Y.
Nason, Carleton W ..... New York city.
Parker, Chas. H ..... Cambridgeport, Mass
Parks, Edward H ..... Providence, R. I.
Parsons, F. W ..... Elmira, N. Y.
Passel, Geo. W ..... Cincinnati, O.
Randolph, J. H ..... Chicago, Ill.
Ridgway, J. T ..... Trenton, N. J.
Rice, F. B ..... Dunkirk, N. Y.
Roberts, William ..... Waltham, Mass.
Russell, C. M ..... Massillon, O.
Ruth, W. M ..... Fort Wayne, Ind.
Scheffler, F. A ..... Erie, Pa.
Selden, Geo ..... Erie, Pa.
See, Horace ..... Philadelphia, Pa.
Sharp, Joel ..... Salem, Mass.
Skinner, L. G ..... Erie, Pa.
Smith, C. M. W ..... Erie, Pa.
Smith, Geo. H ..... Providence, R. I.
Smith, Scott A ..... Providence, R. I.
Sowter, Isaac G ..... Detroit, Mich.
Spangler, H. W ..... Philadelphia, Pa.
Sprague, W. W ..... Town of Lake, Ill.
Suplee, H. H ..... Philadelphia, Pa.
Swasey, Ambrose ..... Cleveland, O.
Towne, Henry R. (*President*) ..... Stamford, Conn.
Trautwein, Alfred P ..... Hoboken, N. J.
Watson, H. F ..... Erie, Pa.
Watts, Geo. W ..... Philadelphia, Pa.
Webb, J. Burkitt ..... Hoboken, N. J.
West, Thos. D ..... Cleveland, O.
Whitehead, Geo. E ..... Providence, R. I.
Wiley, Wm. H ..... New York city.
Wilkin, W. M ..... Erie, Pa.
Wood, De Volson ..... Hoboken, N. J.
Woodbury, C. J. H ..... Boston, Mass.

The first business was the

REPORT OF THE COUNCIL.

The Council would present its semi-annual report to the Society as follows:

There have been four losses by death since the last report at the Scranton meeting (Vol. X., p. 5):

Daniel N. Jones ..... Member.
Cornelius H. Delamater ..... "
John Ericsson ..... "
Harvey F. Gaskill .....

In the January roll of the members for 1889, the total membership was stated to be 875.

The additions reported hereafter at this meeting, and changes, make the present actual summary as follows:

Honorary members	14
Life members	8
Members	830
Associates	47
Juniors	87
Total	986

The Council would further report that since receiving the letter of invitation from Mr. E. N. Carbutt, President of the Institution of Mechanical Engineers of Great Britain, by which this Society was invited to hold a meeting in London, England, in May, 1889, similar invitations of courtesy have been received from the Institution of Civil Engineers of Great Britain, and the Society of Arts of London. The committee of the Council appointed to consider the matter of accepting these invitations and arranging details of transportation, etc., in connection therewith, found that from among the members of the American Society of Mechanical Engineers and the American Institute of Mining Engineers, by arrangement between the societies, a party of over one hundred and seventy persons (including ladies) could be depended upon for the trip. They proceeded, therefore, to charter, for the exclusive use of this party, the steamer "City of Richmond," of the Inman and International Steamship Co., at the rate of $110 per person for the round trip. Arrangements have been completed to have this steamer sail May 25th. An additional party of about twenty will sail the following week per the "City of New York," of the same line, together with about fifty of the American Society of Civil Engineers, the two parties uniting in Liverpool. After a visit and most hospitable entertainment in London, England, and the provinces, they will continue their journey to Paris. The party will disband in Paris toward the end of June, the members returning to this country at their individual convenience. A most distinguished committee of English engineers is to act as a reception committee, and points of the greatest professional interest are to be visited.

The Council has been consulted in reference to co-operating with British engineers in a memorial to the late Prof. W. J. M.

Rankine, of Glasgow. The reply to the communication advised that the memorial fund be expended to found and endow a laboratory of engineering, connected with the University of Glasgow, to be known by Rankine's name, and that in this event members of this Society would be invited to subscribe to this object.

The Council have also decided upon a step of some importance, in removing its executive office from the lower and business section of New York city. The former offices at No. 280 Broadway, between Chambers and Reade Streets, were in an office building (Stewart Building), and the growing library of exchanges, the gifts of apparatus and other property, and the growing volume of business attendant upon the rapid growth of the Society and its widening usefulness, made a merely office headquarters an inadequate accommodation. As the result of a letter-ballot on this subject, the Council decided to secure part of a house in the upper or residence part of New York city, where the Society's library could be made accessible, and kept open for consultation in the evenings. They have rented the ground floor of No. 64 Madison Avenue, New York, with this view, and are now in possession. It is proposed in the autumn to make special provision for the comfortable use of these rooms by the members when visiting New York.

Upon the death of Capt. John Ericsson, the Council departed from its usual custom, and requested the members resident in New York to attend his funeral as delegated representatives of the Society.

His services to the profession, and to the nation also, in its crisis at the civil war of 1861–65, prompted them also to prepare the following minute, and direct that it be suitably published:

The Council of the American Society of Mechanical Engineers, convened in special session after the death of the late Capt. John Ericsson, member of the Society, have prepared the following minute, and have directed that it be spread upon their records, and published in the Report of the Proceedings of the approaching Convention (XIXth) of the Society.

Resolved, That in the death of Capt. John Ericsson, the profession of mechanical engineering has lost one of its most illustrious and notable representatives, who, during a long and busy life, had attained more of success than is usually allotted to one man in the application of science to engineering problems. His life, reaching down to this day, spans the entire epoch of the development of the locomotive engine for railways, from its modest beginning at the Rainhill com-

petition in 1829, when he entered his design, the "Novelty," at the side of Stephenson's "Rocket."

Resolved, That in the field of the development of the caloric engine for industrial purposes, the profession of mechanical engineering appreciates the foresight of Captain Ericsson in realizing the capabilities of that source of power for light services, and his labor and skill in the designing of such engines.

Resolved, That in the effort to utilize the direct heat of the sun as a source of power for industry and manufactures, Captain Ericsson stood easily in the forefront of investigators in this direction, which would seem to promise so much of future increase of comfort and amelioration of toil for the race, when the satisfactory solution of the problem is reached.

Resolved, That we recognize the intuitive capacity of Captain Ericsson, by which he saw the possibilities of the screw propeller for the propulsion of sea-going vessels, and its greater efficiency and safety as applied for this purpose to war vessels. We appreciate his boldness and strength of conviction in the design and construction of the steamer Princeton for the U. S. Navy, embodying these ideas.

Resolved, That aside from the feeling of indebtedness to Captain Ericsson, which every American feels toward the designer of the original Monitor of 1861, the profession of mechanical engineering recognizes the pregnant consequences of the conception of turreted war-ships, which principle impressed itself upon the naval architecture of all nations for many years after it was first realized by Captain Ericsson.

Resolved, That we further recognize the debt which is due to Captain Ericsson for his experiments on a practical scale in the field of submarine warfare with torpedo-boats, and trust that further progress may follow from the experience which has thus been gained.

Resolved, That copies of these resolutions be sent to the executors of Captain Ericsson, with a request that they will give them such publicity in this country and in Sweden, as shall make manifest the warm appreciation in which his professional colleagues held the services which he had rendered in his profession in this country.

Resolved, That a committee of the American Society of Mechanical Engineers be appointed by this Council to memorialize the Government of the United States to commemorate in some suitable manner the pre-eminent services rendered to this country, at a time of great national crisis, by the engineering genius and skill of our late member, Capt. John Ericsson.

Such committee, subsequently appointed, consists of Messrs. Thurston, Leavitt, Emery, Holloway and Robinson.

Purchase has been also authorized and effected of a reproduction in permanent photography of the Scott portrait of James Watt. It now stands in the Society's rooms.

The report of the Tellers of election of members on the three

ballot lists for this meeting, is here presented for publication and record:

"The undersigned were appointed a Committee of the Council to act as Tellers, under Rule 13, to count and scrutinize the ballots cast for and against the candidates proposed for membership in the Society of Mechanical Engineers, and seeking election before the XIXth meeting of the Society in May, 1889.

"They would certify, for the formal insertion in the Records of the Society, to the election of the appended named persons, to their respective grades upon Lists Nos. 1, 2, and 3, respectively, pink, yellow and green.

"There were 364 votes cast in the ballot upon the pink list, of which 9 were thrown out because of informalities.

"There were 369 votes cast upon the yellow ballot, of which 12 were thrown out because of informalities.

"There were 395 votes cast upon the green ballot, of which 16 were thrown out because of informalities.

"The lists are appended below.

"STEPHEN W. BALDWIN, } *Tellers.*"
"WM. H. WILEY, }

MEMBERS.

Backstrom, G. L.	Philadelphia, Pa.
Baldwin, Oscar H.	Pittsburgh, Pa.
Barnes, Abel T.	Jamaica Plain, Mass.
Barr, John H.	Minneapolis, Minn.
Baugh, Saml. A.	Detroit, Mich.
Beekman, John V.	Brooklyn, N. Y.
Benjamin, Park	New York city.
Blake, Percy M.	Hyde Park, Mass.
Broadbent, Chas. L.	New York city.
Brooks, Wm. B.	Erie, Pa.
Brück, Henry T.	Jersey City, N. J.
Cadwell, Wm. D.	Nashua, N. H.
Cary, Albert A.	New York city.
Christie, W. W.	Hillburn, N. Y.
Cook, A. S.	Hartford, Conn.
Cramp, Andrew D.	Philadelphia, Pa.
Davis, D. W.	Salem, O.
Dock, Herman	Philadelphia, Pa.
Doran, Wm. S.	New York city.
Draper, T. W. M.	New York city.
Drown, F. E.	Pawtucket, R. I.
Drummond, D. D.	Chicago, Ill.
Fairbairn, W. U.	Hyde Park, Mass.

Field, Cornelius J. ..... Brooklyn, N. Y.
Flather, John J. ..... Bethlehem, Pa.
French, C. E. ..... Deseronto, Canada.
Gilmore, Robert J. ..... Providence, R. I.
Greene, Stephen L. ..... Newburyport, Mass.
Griffin, Eugene ..... Boston, Mass.
Handren, John W ..... New York city.
Hardwick, Wm. ..... Erie, Pa.
Havemeyer, Hector C ..... New York city.
Hayward, Fred. H. ..... New York city.
Hershey, Martin E. ..... Harrisburg, Pa.
Hughes, E. W. M. ..... Chicago, Ill.
Humphrey, John ..... Keene, N. H.
Hunter, F. S. ..... Brooklyn, N. Y.
Idell, Frank E. ..... New York city.
Jacobus, D. S ..... Hoboken, N. J.
Jenks, Wm. H. ..... Brookville, Pa.
Jones, Edward H. ..... Cleveland, O.
Keller, John A. ..... Hamilton, O.
Kent, Ellis C. ..... Bethlehem, Pa.
Laidlaw, Walter ..... Cincinnati, O.
Locke, Warren S. ..... Providence, O.
McClatchey, A. F. ..... Springfield, Ill.
McDuffie, Chas. D. ..... Manchester, N. H.
Mahon, Wm. L. ..... Detroit, Mich.
Mattice, Asa M. ..... Cambridgeport, Mass
Miller, Jas. S. ..... Erie, Pa.
Montgomery, H. M. ..... Norwood, Mass.
Parks, Wm. R. ..... Boston, Mass.
Parsons, Fred W. ..... Elmira, N. Y.
Penruddock, J. H. ..... Fort Gratiot, Mich.
Poore, Townsend ..... Scranton, Pa.
Potter, Frederick D. ..... New York city.
Rice, F. B. ..... Dunkirk, N. Y.
Richards, Geo. ..... Manchester, England
Richmond, Geo. ..... New York city.
Roney, W. R. ..... Chicago, Ill.
Royce, H. A. ..... Boston, Mass.
Rund, Edwin ..... Pittsburgh, Pa.
Scribner, Chas. W. ..... Ames, Iowa.
Sederholm, E. T. ..... Chicago, Ill.
Snow, Wm. W. ..... Hillburn, N. Y.
Stanwood, Jas. B ..... Cincinnati, O.
Terrell, Chas. E. ..... Jersey City, N. J.
Tribe, James ..... Providence, R. I.
Verastegui, Albert ..... Havana, Cuba.
Voorhees, Philip R ..... New York city.
Webster, Wm. R. ..... Philadelphia, Pa.
Weickel, Henry ..... Stamford, Conn.
Willcox, Chas. H. ..... New York city.
Wohl, Louis ..... Chicago, Ill.

Wolcott, Frank P. ..... Elmira, N. Y.
York, L. D. ..... Portsmouth, O.

ASSOCIATES.

Dodge, Wallace H. ..... Mishawaka, Ind.
Hurford, O. P. ..... Chicago, Ill.
McCollin, Thos. H. ..... Philadelphia, Pa.
Magee, Frank A. ..... New York city.
Putnam, H. C. ..... Eau Claire, Wis.
Raymond, Jas. H. ..... Chicago, Ill.
Simpson, Geo. R. ..... Washington, D. C.
Stangland, B. F. ..... New York city.
Tucker, Wm. B. ..... Elizabeth, N. J.
Watson, H. F. ..... Erie, Pa.

JUNIORS.

Aborn, Geo. P. ..... Warren, Mass.
Aguillera, A., Jr. ..... Puerto Principe, Cuba.
Anderson, W. E. ..... Fayetteville, Ark.
Bang, Henry A ..... New York city.
Barr, Harry P. ..... Boston, Mass.
Bird, Wm. W. ..... Worcester, Mass.
Cruikshank, Barton ..... Brooklyn, N. Y.
Dewson, Edwd. H., Jr. ..... St. Joseph, Mo.
Earle, Edgar P. ..... Hazleton, Pa.
Eberhardt, F. L. ..... Newark, N. J.
Edwards, V. E. ..... No. Chelmsford, Mass.
Goss, Edward O. ..... Waterbury, Conn.
Holmes, Chas. L. ..... Waterbury, Conn.
Johnston, Edward B. ..... Cincinnati, O.
Keiley, H. J. ..... New York city.
Laird, John A. ..... St. Louis, Mo.
Lowe, Wm. V. ..... Fitchburg, Mass.
Percival, Geo. S ..... New York city.
Platt, John ..... Cambridgeport, Mass.
Quimby, Wm. E ..... Orange, N. J.
Reist, H. G ..... Harrisburg, Pa.
Reynolds, Geo. F. ..... Chicago, Ill.
Samuels, Jonathan H. ..... Springfield, Ill.
Scholl, Julian S ..... Harrisburg, Pa.
Sheppard, Frank E. ..... Dorchester, Mass.
Smith, C. M. W. ..... Erie, Pa.
Trowbridge, Frank C. ..... Hamilton, O.
Wiggin, Wm. H. ..... Worcester, Mass.

PROMOTIONS.

FROM ASSOCIATE TO FULL.

Keppy, Frederick, Bridgeport, Mass.

FROM JUNIOR TO FULL.

Hill, William, Collinsville, Conn.

At the close of this Report, the President named the committee, under Article 31 of the Rules, to nominate officers for the Society's year 1889–90, as follows:

Mr. Chas. H. Manning.....Manchester, N. H.
" John H. Cooper .....Philadelphia, Pa.
" F. F. Hemenway.....New York city.
" A. K. Mansfield.....Salem, Ohio.
" E. H. Parks.....Providence, R. I.

No new business being presented to the Convention, the precedent was established of discussing at the opening session the Address of the President read at the preceding general session. Messrs. MacFarren, Denton, and Wood took part in discussion. The paper by Thos. S. Crane, of Newark, N. J., on "The Piping of Steel Ingots," received no discussion. The paper of Mr. Henry R. Towne, of Stamford, Conn., entitled "Gain-Sharing," was discussed by Messrs. Denton, Wood, Parker, Nason, and Davis.

"The Comparative Cost of Steam and Water Power," paper by Mr. Chas. H. Manning, of Manchester, N. H., received discussion by Messrs. Denton, MacFarren, and Scheffler. Mr. D. W. Robb, of Amherst, N. S., presented a memorandum on The Old Locomotive "Sampson," which was not supplemented.

Until the hour of adjournment, the Topical Queries were discussed by Messrs. Christie, Fawcett, Denton, Hemenway, Scheffler, Sprague, Ide, Hardwicke, Scott Smith, MacFarren, Cooper, Davis, Nason, Duran, Denton, and Towne, as follows:

"What form of self-oiling boxes have you found the best for line and counter shafting? Can you give figures as to economy of oil as compared with other methods?" and "What form of oil cup or lubricator do you find most economical for use on machines requiring constant lubrication?"

Wednesday Evening, May 15th.

The third session was called to order at eight o'clock. The paper on "Standards," by Jas. W. See, of Hamilton, Ohio, received discussion by Messrs. Oberlin Smith, Nason, Suplee, and Webb, and resulted in a motion that a committee of the Society be appointed by the President to consider and report at the next meeting the expediency of taking action on the subject of a Bureau of Standards to be established by the U. S. Government, as proposed in that paper. That committee was subsequently an-

nounced—Mr. James W. See, of Hamilton, Ohio, Mr. Oberlin Smith, of Bridgeton, N. J., and Mr. Coleman Sellers, of Philadelphia, Pa. Prof. J. Burkitt Webb, of Hoboken, N. J., read his two papers: "An Error in the Encyclopædia Britannica," and "Note on the Steam Turbine." The former was discussed by Profs. W. C. Unwin, of London, England, and De Volson Wood; the second by Messrs. Swasey, Denton, and Wood. Mr. Samuel Webber, of Charlestown, N. H., reported "Notes on the Comparative Loss by Friction in a Transmitting Dynamometer under Different Loads and Speeds." This was discussed by Prof. Denton. "Steam Consumption of Engines at Various Speeds," a paper by Prof. Jas. E. Denton, was discussed by Messrs. Wolff, Spangler, and Wood. Prof. Denton's other paper was on the "Performance of a Thirty-five Ton Refrigerating Machine of the Ammonia Absorption Type."

THIRD DAY, THURSDAY, MAY 16TH.

The fourth session was called to order at ten o'clock in the morning.

The first paper was by Prof. De Volson Wood, on "Expansion of Timber due to the Absorption of Water." The other papers were: "Some Properties of Ammonia;" "Formulæ for Saturated and Superheated Vapors," and "Some Properties of Vapor and Vapor Engines," which were discussed by Messrs. Denton, Ball, and Nason. Mr. A. F. Nagle, of Chicago, Ill., read a paper on "Cornish, or Double Beat Pump Valves;" and Mr. A. W. Jacobi, of Newark, N. J., presented one on an "Improved Motion Device for Engine Indicators;" the latter being discussed by Messrs. Wood, Denton, Suplee, and Ball. Mr. F. W. Dean's paper, supplementary to the previous one on the "Distribution of Steam in the Strong Locomotive," read at Nashville, in May, 1888, was discussed by Messrs. Sprague, Denton, Ball, and Mansfield. The final paper of the session was that of Prof. J. M. Whitham, of Fayetteville, Ark., on "Cylinder Ratios of Triple-Expansion Engines." It received discussion by Messrs. Spangler, Suplee, Ball, Doran, and Wood.

The remainder of the hour up to time of adjournment was taken up by the Topical Discussions. Messrs. Scott A. Smith, Dutton, and Towne, discussed the question of a central support under the bed of engines of the girder-bed type. Messrs. Sweet, Rice, Denton, Dutton, Wood, Whitehead, and Woodbury, spoke of

the reasons why it prevents breakage of bolts to reduce the metal section between head and threads. Messrs. Christie, Woodbury, MacFarren, Parker, Russell, and Towne, discussed the advisability and practicability of electric motors for mechanical operations.

Fourth Day, Friday, May 17th.

The final session was called to order at half-past nine in the morning. The hour was put slightly earlier than at first appointed, to admit of the enjoyment of the afternoon excursion by those compelled to leave town by early trains.

The first paper was that by Scott A. Smith, of Providence, R. I., on "Tractive Force of Leather Belts on Pulley Faces." It received discussion by Messrs. Nagle, Cooper, Denton, Ball, Dutton, Davis, and Towne.

The paper by Mr. Jno. H. Cooper, of Philadelphia, Pa., on the "Longitudinal Riveted Joints of Steam Boiler Shells," was discussed by Messrs. Parker, Scheffler, Hutton, Suplee, and Towne. Mr. Lewis F. Lyne, of New York city, presented the last two papers of the session, on "Bits of Engine-room Experience," and the "Use of Crude Petroleum in Steam Boilers;" the latter being a supplement to his paper presented at the Philadelphia meeting of 1887. The former was discussed by Messrs. Oberlin Smith, Dutton, Mansfield, Cooper, and Davis.

At the close of the professional business, Mr. C. J. H. Woodbury gave notice that—

In accordance with Art. 45, the following proposed amendment will be offered at the next meeting:

Art. 20. Insert after "consisting of," "the past Presidents and the."

Art. 21. Insert at beginning, "The past Presidents during their membership in the Society."

And in connection with the same matter I shall move that the past Presidents at this date shall be included in the above.

The following resolutions were then offered:

Resolved, That the thanks of the Society are due in an eminent degree to the Local Committee of Arrangements for the Erie Meeting.

The success of this meeting has been due in no small degree to the services of these gentlemen, in making ample provision for the entertainment of the Society, devoting their time and energy for the promotion of the purposes of the Society, both in regard to the sessions, the excursions, and also the social courtesies offered to the members and their friends.

We shall always retain pleasant remembrances of the Erie meeting, which will be due primarily to the efficient services of the Local Committee of Arrangements.

Resolved, That the American Society of Mechanical Engineers desire to express their appreciation of the hospitality of the Erie Board of Trade in extending to the Society the use of their rooms, appropriately decorated, for the Society's meetings; and return thanks to the Board for having contributed so substantially to the success and pleasure of this Convention.

Resolved, That the thanks of the Society be tendered to the ladies of Erie, who have kindly given so much of their time to the entertainment of the Society, during our visit here, as well as to the entertainment of the ladies of our party; and that we take this opportunity of assuring them that we will long carry with us the most pleasant recollection of the numerous occasions on which they have so hospitably entertained us.

Resolved, That the Society hereby expresses its thanks to the manufacturers of Erie for extending to its members the privilege of visiting their interesting establishments, the inspection of which has formed a highly entertaining feature of the present meeting.

After a few words of reply by Erie gentlemen, the Convention adjourned.

Excursion Days.

On the afternoon of Tuesday, many of the members visited the U. S. S. "Michigan," stationed in the harbor of Erie. They inspected also the City Water Works and stand-pipe. The party was then conveyed in carriages to view the Scott stock-farm, near the city.

On Wednesday afternoon, carriages took the party to visit the Erie City Iron Works, the Stearns Mfg. Co., and the Jarecki Mfg. Co.

On Thursday afternoon, the members were similarly conveyed to the Watson Paper Mill, the Ball Engine Co., the Jarecki foundry, and the shops of Messrs. Nagle & Cleveland & Hardwick. A shower somewhat interrupted this afternoon's programme.

In the evening, a reception was tendered to the Society by the local members in the Reed House. The dining-saloon was cleared for dancing, and the music and a collation were brilliant features of the evening.

On Friday, after an early adjournment, the members were taken for a sail upon the land-locked bay which forms the splendid harbor of Erie, the life-saving station giving a special exhibition drill, for the benefit of those visitors who found time to land at the end of the Presque-Isle.

CCCXXXI.

PRESIDENT'S ADDRESS. 1888.*

BY HORACE SEE, PHILADELPHIA, PA.

(President of the Society, 1887-88.)

"Knowledge and wisdom, far from being one,
Have oft-times no connection. Knowledge dwells
In heads replete with thoughts of other men:
Wisdom, in minds attentive to their own.
Knowledge is proud that he has learned so much;
Wisdom is humble that he knows no more."

COWPER.

WITH the general introduction of labor-saving devices, and the advancement of the mechanic arts, the demand for the laborer is every day becoming less and less, and that for the skilled workman greater and greater, as the drudgery of life is lifted from man and transferred to the machine, which, in its turn, demands of him skill to build and to manage.

As a natural consequence, the supply of skilled workmen — the rank and file of our industrial army from which many of the illustrious men in our profession have sprung — is insufficient to meet the demand which our manufacturing interests, from their rapid and marvelous growth and diversified character, have created.

In this emergency the wealth and prosperity of our country is shown by the numerous schemes launched on the ocean of experiment for the education of the young to fill any position from the workman to the manager. By some it is proposed to teach specific trades in the school instead of in the workshop, not only as an offset to the dropping off of apprenticeship in some branches, but, particularly, on account of supposed superiority of the school over the workshop as a place wherein to inculcate the necessary knowledge, because the academic mind regards the intellect of the people "as lying dead for the want of knowledge."

* This Address should have been delivered at the opening session of the Scranton (XVIIIth) Meeting in October, 1888, upon Mr. See's withdrawal from his office. On account of his severe illness at that time, the address was not prepared for publication in Part I. of the present volume, but has been postponed to the present time and place.

The scientist says that light is not to be found in the workshop, where darkness reigns supreme; that "in former times all industries were taught by apprenticeship, which really afforded a good technical education suited to past periods, when industries were carried on by rule of thumb, and not on scientific principles. In past periods, medical men were trained in the same way until science illumined their profession, and then technical education in it became essential for the safety of the public." *

It is unfortunate for this argument that the medical education of to-day is cited as having become more scientific and less practical, for nowhere else is practice looked upon with greater reverence, and such efforts made to secure the assistance of the most eminent practitioners to impart their valuable information and display their skill for the edification of the student. For this reason the hospital, as a vast field for acquiring practical knowledge, has been brought alongside of the college for the student to note what is being done there, and to acquire skill for the work of his profession.

It is suggested that "the mechanic arts high school may be brought into our existing system of public education, and made to serve the needs of a large class of youth who have special capacities for industrial work," † because "manual training has been proved by private experiment to be an indispensable part of education to a large part of our American youth; but the perplexing question is how it can be brought into the public school so as to justify its place, and to produce results that are as satisfactory in the direction of the trades as the results of the academic and classical schools are in the preparation for professional work. The public high schools have been specialized towards the professions, but little or no attention has been paid to the specializing of instruction toward the great industries."†

This system is intended to benefit the trades and render aid to the boy whose bent is towards industrial life. Handiwork is to be recognized, and used to reclaim the missing educational link, as well as to compensate for the defects in such a life, brought about by the dropping out of apprenticeship in some branches of the trades.

Beginning at the age of fourteen, the course of study is to be three or four years, two-fifths of the time daily to be given to selected or graded shop work, one-fifth to drawing, and the remaining two-fifths to appropriate book work (which Prof. Huxley calls bookish education).

* Playfair. † Seaver.

It is claimed that the result is "a high degree of mechanical sk and a well-marked development in the power of independe thinking," * also that the mechanic arts school supplies just wh the student needs, "looking forward to work in science, technolog industrial art, or commercial activity." *

It is not only perplexing to conceive how a trade can be taug in the manner specified, but how a boy, staggering under his lo of science, technology, industrial art, or commercial activity can brought down to such an humble pursuit and made to work at The fact is that he cannot be brought there, but aspires at once something higher. His efforts in this direction, as a rule, are u successful, and cause him to drop out of mechanical pursuits.

One of the most prominent schemes, on account of the larg endowment of the institution, is that of a free school of mechanical trades, to be located in an agricultural country at some distance from manufacturing establishments, where buildings must be built and equipped with the appliances necessary for teaching each particula trade.

It shows how far from natural methods the teaching of the youn to become skilled workmen is drifting, and seems to add anothe example to the many previously existing, of kind but misdirecte efforts to educate them.

It is well to know that the founder of this school amassed fortune greater than any other in the city where he dwelt, withou the assistance of a superior education, and that his competitors i the race to acquire wealth included not only many with a scant education like his own, but also a large number with one far mor complete and brilliant.

In opposition to the schemes which intend to turn the channel o education for the trades from what is natural, there has been som expression of late.

A giant in the mighty works which have marked our age, liberal provider for the education of his neighbor's workmen a well as his own, writes, "I speak as one from the education ally dead in saying that I never had a scrap of instruction bea ing on my profession, beyond what I imbibed for myself, an that I feel that it has done me incomparably more good than if i had been administered to me. I repudiate the imputation of ho tility to knowledge or to giving facilities for attaining it to thos who desire to acquire it and have capacity to utilize it; but

* Seaver.

deprecate plunging into doubtful and costly schemes of instruction led by the *ignis fatuus* that 'knowledge is power.' Where natural capacity is wasted in attaining knowledge, it would be truer to say that 'knowledge is weakness.' Nevertheless I do not disparage knowledge; but, on the contrary, I respect and value as highly as anyone the vast store of human thought and experience which is embedded and sometimes entombed in print, and the useful part of which is accessible to all through cheap literature and libraries. But that store of knowledge, valuable as it is to those who seek it for an object, and desirable as it is to those who pursue it for the laudable purpose of mental improvement and intellectual occupation, has no benefit to confer on unwilling or incapable recipients, and I am afraid it must be confessed that its economic value in the ordinary vocations of life which give employment to the multitude is extremely small." *

"Sir Lyon Playfair declares himself an advocate of including within the scope of technical education the teaching of specific trades and industries. I, on the contrary, say that the workshop and factories, or other places where actual business is carried on, are the proper schools for the learning of such trades and industries." *

His definition of the object of technical education, which, he says, is "to give an intelligent knowledge of the sciences and arts which lie at the basis of all industries," is not very clear, but as he proceeds to mention with approval the attendance of bricklayers in a class of bricklaying, tailors in a class of cutting and fitting, and watchmakers in a class of watchmaking, we are at no loss to understand the scope to be given to the education he demands.*

Mechanical science is defined "as enabling its possessor to plan a structure or machine for a given purpose without the necessity of copying some existent example; to compute the theoretical limit of the strength and stability of a structure, or the efficiency of a machine of a particular kind; and to judge how far an existing practical rule is founded on reason, how far on custom, and how far on error." †

The workers in the trades enumerated above are not usually looked upon as coming within the definition of those requiring mechanical science in order to be fully equipped for their field of usefulness. If they, however, are to be included within its meaning, it would not do to leave out the thousands of others with the same

* Armstrong. † Rankine.

pretensions existing in our large cities. To attempt a thorough education of such a throng in schools, either through private generosity or at public expense, is altogether impracticable.

To further a more practical education, one of our colleges has founded a chair of practice in mechanical engineering, the aim being to train the engineer in a manner similar to that adopted for the physician and lawyer. Heretofore "professional instructors of a high grade were attainable, but as a rule they had little or no familiarity with the needs of the practical mechanical engineer, and their knowledge of mathematics, drawing, physics, chemistry, etc., however profound, as a rule dealt with a class of problems which differed so much in detail from those encountered by the mechanical engineer, that, though the underlying principles might be all that was necessary, their mode of application to the practical problems of the machine shop was too little developed to be useful." *

Now it is proposed to bring the student down from the highly scientific plane of the school to the matter-of-fact customs and usages of every-day practice of the workshop, so that, when he enters the latter, he will be familiar with the useful concrete methods which are necessary for his success.

In another direction, but outside of the school of mechanics, we have another move for practical education. It is a school of journalism, the class being taught by one fresh from that field, and most of the students are those engaged in some capacity on the press. The professor is quoted as saying to his students that those "who want to conduct country newspapers, and are unable to get that best of training work on a large city newspaper, where the work is directed by experts," † should take the course in journalism.

If it is important that the engineer should receive instruction from the practitioner to enable him successfully to design and execute work, is it not equally important that the machinist should acquire his skill from contact with the best mechanics, by practice in and by familiarity with the customs, usages, character, and variety of work of the workshop?

In an address delivered in Philadelphia, on the Nautical School Ship, its Objects and Workings, the speaker, after referring to the establishment of manual training-schools, and that they accomplished on land what the nautical school ship did on the water, gave as a reason why the latter should be established "that thousands of

* Sellers. † Smith.

boys who are not in a position to obtain instruction in training-schools must have something done for them." * This was an unintentional acknowledgment that the manual training-school is out of the reach of the masses, and benefits but a few. The advocates of the manual training system do not stop to think how the children are to be provided for during the extended period of non-production which follows their common-school education.

The parents of these children are not provided with the necessary means for maintaining them until the age of eighteen or nineteen years, but on the contrary are compelled before this time to send them where something can be done to increase the store needed for their support. If a better education is to be given to this class, the night school must supply it in connection with the workshop in the one direction; or, if the philanthropist desires to lend his assistance to support as well as to educate, the money would go farther, and the product, it seems to me, would be a much superior one, if the manual and practical education were left to the workshop in the other.

In carrying out this last scheme, the boy, who has previously received a good common-school education, should be regularly apprenticed for at least four years in an establishment engaged in the special work he expects to follow at the end of the term. Instead, however, of devoting the entire time, as at present, to shop work, but four consecutive days of the week would be spent in this way, and the remaining two in study. In order that a full complement shall be provided for the different establishments throughout the week, the boys for each establishment should be divided into bodies, so as to spend their time alternately there. By this means thirty-two months would be spent in the shop and sixteen in the school, together with the superior advantage not only of sandwiching the mental labor between plenty of physical exercise, but of frequently having brought before the pupil the practical application of the rules taught in the school, besides his having the almost continual exercise of his hands, and his finding out how to do the varied work.

The industrial home, with its schools, should be located in the midst of a manufacturing center. The school should be well provided with all the necessary facilities for instruction in subjects bearing upon mechanical engineering, naval and civil architecture, chemistry, electricity, mathematics, and drawing. For boys who are

* Lawrence.

able to live at home, night-schools could be provided in the same institution, taught by another corps of teachers.

Light and popular exercises at fixed periods in a gymnasium attached to the school would lighten the work, as "all work and no play makes Jack a dull boy." At the end of the session, rewards might be given to those excelling in special branches; marks for regularity of attendance to be included in making up the average.

It would be a great advantage to our youths if the common-school education were modified so as to call on all of the faculties of the mind, and not to rely so much on cramming the memory. The eye should be taught early to perceive, and the hand to delineate, the objects around. The knowledge acquired in this way would be real, and of more value to the possessor than all that is abstract in most of the pursuits of life. Let us bend our efforts and lend our assistance to hasten the time "when more of the mechanical branches of our educational institutes shall find their true position, and where the students shall be instructed by example of noble work, rather than by the toy models abounding in confusing complication which they cannot understand, and which are constructed regardless of proportion and meaningless in design, and are pernicious in every sense of the term. Let us hope, if the tide of human progress is sweeping on towards a more useful education, that the day may not be far away when he who knows what to do and how to do it will be regarded as the equal of him who only knows what has been done and who did it." *

The ancients well knew the value of practice in the field, of exercises with conditions as nearly as possible like those in actual warfare, and the development of the physical and moral qualities in their legions. These subjects to-day are receiving more attention in army circles, where the importance of developing them is urged. It is said that "the commander of an army may possess all the genius of a Napoleon for great combinations and far-reaching plans; he may have the talent of a Gustavus for grand tactics, or of a Frederick or a Wellington for quick discernment in action; yet if his troops be deficient in physical and moral qualities, all may fail. It is axiomatic that the quality of the ultimate unit—the man—must vitally affect the character of the work done by the masses." †

"The Egyptian soldiers were inured to the fatigues of war in

* Sweet. † Weaver.

peace by severe and rigorous discipline; likewise the Persian troops were trained by Cyrus, by frequent physical exercises, to be inured to fatigue, and were prepared for real battle by mock engagement." *

"The Greeks in turn paid the same attention to developing the physical and moral powers of their soldiers for the fatigue of campaign and for combat; only, with this people, the system was elaborated into laws that became the fundamental principle of the government—the chief end of citizenship was to become a worthy soldier. Such were the laws of Lycurgus; their sole object was to develop the male child into a powerful and skillful soldier. From their earliest infancy no other taste was instilled into them but for arms. To go barefoot, to lie on the bare ground, to be satisfied with little meat and drink, to suffer heat and cold, to be exercised continually in hunting, wrestling, running on foot and horseback, to be inured to blows and wounds, so as to vent neither complaint nor groan,—these were the rudiments of the Spartan training." *

"So sensible were the Romans of the imperfection of valor without skill and practice, that in their language the name of an army was borrowed from the word 'exercise.'

"Military exercises were the important and unremitted object of their discipline. The recruits and young soldiers were constantly trained, both in the morning and evening; nor was age or knowledge allowed to excuse the veterans from daily repetition of what they had carefully learnt." †

"The luxury and voluptuousness of the East filtered into Europe through the conquests of Alexander and of the Romans, sapping first the physical strength of the Greek phalanx, then that of the Roman legion, and leaving the last to be toppled over by the vigorous brute strength of the unorganized, undisciplined hordes of barbarians from the North. All that was noble and worthy of the military art in Europe vanished; progress, civil and military, disappears in the chaos of the Dark Ages.

"The only trained soldiers of this period are to be found in the East. The Saracenic armies that followed the Great Prophet and the caliphs that came after him, forcing Islam on Christian people, were made up of valiant slaves who had been educated to guard the person and accompany the standard of their lord.

"The highest development of this class of troops is had in the Janizaries of the Ottoman Turks." ‡

* Rollin. † Gibbon. ‡ Weaver.

The organization was afterwards maintained by levying on the same tribes. "At the age of twelve or fourteen years the most robust youths were taken from their parents, their names enrolled in a book, and from that moment they were clothed, taught, and maintained for the public service. Their bodies were exercised by every labor that could fortify their strength; they learned to wrestle, to leap, to run, to shoot with the bow, and afterwards with the musket. A spirit of submission and temperance, silence, patience, and modesty, pervaded both officers and men." *

"It is suggested that the manly sports of our day come in, just at this point, to produce a high average man, not a specialist, to supply the deficiency and complete the system. In these sports the average man is the best man; they call upon the mind and body in a soldierly, manly way, for an intensity of effort that cannot be attained, it is believed, in any other form. It is agreed that nothing so serves to develop physical activity, endurance, coolness in excitement, quickness of thought, daring, and other moral traits that spring from the enthusiasm associated with contest of numbers seeking success through combined effort under leadership, with emergencies ever present and always changing. In no other way can battle conditions—physical and moral—be so perfectly simulated." † The pre-eminence which practice in the field, as well as physical endurance and moral qualities, gave to the soldiers of ancient times, and made them victorious in battle, while the loss of these qualities allowed them to be readily vanquished by vigorous, undisciplined, brute strength, is an argument, not to neglect, but to pay more attention to practice in the field of labor chosen, and to the development in our youth of all that made the ancients great, for success in the peaceful warfare of trade. Nor is this all; the thousands, of whom but a few can become generals or even captains in this contest, whose services, however, cannot be dispensed with, should be trained as workmen capable of assuming a higher position, taught as men to feel proud of their occupation, encouraged by proper reward and acknowledgment of their skill, shown that patience is requisite to secure the prize, that the genius of both the engineer and workman is the genius of patience, and that "a piece of cobbler's wax that will keep a man fastened to his work chair is the potent thing that the world calls inspiration." ‡

* Trollope. † Gibbon. ‡ Weaver.

DISCUSSION.

Mr. S. J. MacFarren.—I should have regretted it exceedingly if this Address had been allowed to pass with the possibility of its being construed by the press, for instance, as the utterance of this Society with reference to the system of manual training which is attempted to be introduced into our public schools, particularly here in this State at this time. Governor Beaver has appointed a committee whose members have visited the industrial and technical schools of Europe, at the head of which committee is Dr. Atherton, President of the Pennsylvania State College, and which has upon it also such men as the President of Girard College. They have prepared a bill on this very subject; and just at this time anything which could be construed by the enemies of manual training into an expression of opinion by this Society adverse to such systems would be particularly unfortunate, and for that reason I am glad to have the opportunity, as one of your newest and smallest members, to say a word on the subject of this proposed reform, which is a most important one, and which engineers, of all people, should appreciate and favor.

The author says that "it would be a great advantage to our youths if the common-school education were modified so as to call on all of the faculties of the mind, and not to rely so much on cramming the memory. The eye should be taught early to perceive and the hand to delineate the objects around." No educated or thoughtful person, or parent who has thought about his own boy's future, would criticise that for instance, it being directly in the line of favoring manual training, as is also this other statement that "the Ancients well knew the value of practice in the field, of exercises with conditions as nearly as possible like those in actual warfare, and the development of the physical and moral qualities in their legions." Those two quotations I mention first because they belong to the ground-work of the argument *for* the support of manual training in the schools. But we find that the bias of the Address and of the author's own mind is evidently *against* manual training. For instance, he quotes some one's definition of the object of technical education, which he says is "to give an intelligent knowledge of the sciences and arts which lie at the basis of all industries." He says that is not very clear; I think that *is* a clear definition; and then he goes on to confound *manual training* with *trade-schools.* In fact, this whole Address is based upon

a misapprehension in the mind of its author on the latter pc
Manual training is as distinct from *trade-schools* as our gramn
schools are from the commercial colleges, or from the school
medicine and law which perfect our education later. Manual tr
ing is a system of mechanical exercises scientifically calculatec
and experimentally adapted to the capacities and faculties of t
of grammar-school age—or high-school age, if I might bring
little farther; and *none* of the arguments which are used in
Address against trade-schools apply to it in the slightest deg
A *trade-school* is a school to prepare a man for some partic
trade; it aims to make a bricklayer, or carpenter, or blacksn
or machinist. *Manual training* does not attempt anything of
sort. It attempts to give a boy at the most impressible a
moderate insight into the elementary *principles* and a l
experience of the *practice* which underlie all mechanical const
tion, and in that sense it is invaluable; and when compared
memorizing lists of money-order post-offices in Central Africa,
pedigrees of the queens of Madagascar before the last rev
tion, such as our boys are memorizing in the schools of
country, it is a great advance. I believe that *manual trainir*
a coming reform of educational methods in our common sch

The author of this Address quotes a naval authority who
that thousands of boys who are "not in a position to ob
instruction must have something done for them." And he
that "this was an unintentional acknowledgment that the ma
training school is out of the reach of the masses and benefits
a few." Pennsylvania proposes to bring it in reach of *all* sc
children. "The advocates of the manual training system,"
the Address, "do not stop to think how the children are t
provided for during the extended period of non-production w
follows their common-school education." But that is prec
what the advocates of manual training *do* stop to think of.
assertion just quoted applies to our present *graded gram*
schools exactly—NOT to *manual training methods.* I can count
the fingers of these two hands the concerns in America—or
represented here in the person of Mr. Morgan, of Alliance, Oh
which have anything approaching the old apprenticeship syste
an assistance to American youths to fit themselves for mecha
and industrial pursuits. That specialization of manufact
which have special machinery, and make a special thing, and
comparatively unskilled labor, and teach a man or boy but

thing out of the many things comprised, results in a "trade." I stand here as an American parent to make a plea for American boys to this representative assembly of American Engineers, which I believe to be a modern and progressive body, and I beg of you that you will not allow any utterance which can be construed as an official opinion of this organization to go out to the country that this society is against *manual training* in the public schools. I think anybody who has seen, for instance, the Manual Training School of Philadelphia, or the Tulane High School of New Orleans, or the schools organized by private enterprise in St. Louis, Chicago, Toledo, and other cities, will be what I am,—a partisan of *manual training* in the public schools.

I want to repeat again that this Address is based upon a *confusion of ideas* between *manual training* and *trade-schools*. These are exactly and precisely as distinct as the instruction received in our grammar-schools by the boys in arithmetic is distinct from the exercises of a commercial college. There is no attempt in *manual training* to make any *particular kind* of worker of a boy, but there *is* an attempt to give him experimental and general information as to the principles and materials necessary to all industrial art. Suppose, for instance, a boy is to be subsequently a preacher or doctor, or lawyer or druggist, or a member of any of the so-called professions, leaving out our own profession; in this age of mechanism, when our households are permeated with the ramifications of gas, electrical and other appliances, how can the elementary knowledge of such things be otherwise than good? The idea is carried out in the Address that such instruction would be confined in its benefits solely to those who look forward to a *mechanical* career. That is entirely incorrect. I challenge any one to name an occupation in which it would not be useful—even housekeeping, or, we will say, the case of a man who is a gentleman of leisure, and who is simply a householder. I challenge any one to name a place where a man can be in after-life in which this elementary education may not and probably will not be of the utmost value to him.

I ought to apologize for speaking on this subject at all in the presence of such leaders in education as Prof. De Volson Wood, for instance; but I was so full of it that I could not keep still.

Prof. J. E. Denton.—I cannot but feel that the remarks of the last speaker do some injustice to Mr. See's ideas. I do not believe that the latter is opposed to manual education so far as it is

really valuable. Like most veteran engineers of successful careers, Mr. See is loth to have the idea prevail that an engineer can practice the profession without taking his shop training in actual shop. He therefore means to call attention to the evil of expecting the manual school wholly to supply what has in the past been solely obtained by working in actual shops. In other words, he would not deny that the manual training was not good as far as it goes, but that schools cannot from their artificial character be expected to take the place of practical shop experience. I thoroughly agree with this idea, and I believe that the time is past when it need be feared that any other view prevails among managers of manual training schools.

It must, however, be noted that there are many lines of livelihood of a technical character in which the instruction in the manual training school is sufficient without supplementing it by the real shop experience which the manager of an iron-works or ship-yard undoubtedly needs in order to practice his particular branch of technical art.

Prof. De Volson Wood.—The fact that I have ventilated myself many times upon this and kindred subjects is sufficient to allow Mr. MacFarren's greater interest and zeal in the matter. Having heard from one representative of our institution, it is not necessary for me to take much time in order to make a point or two. In fact, I had not contemplated saying anything upon the subject. The position of the writer would doubtless have been more readily understood had he discriminated more clearly between the different grades of instruction. The character of instruction is necessarily different for boys under seventeen years of age, who devote most of their time to learning a trade, and those over that age who devote most of their time to study. The most marked recommendation of the author seems to be this: "In carrying out this scheme, the boy who has previously received a good common-school education, should be regularly apprenticed for at least four years in an establishment engaged in the special work he expects to follow at the end of his term." Now, a school has its definite functions. A school is a place for learning and for giving instruction, and if, as he goes on to say, four days in the week should be employed in manual operations and two in study, then it becomes either a manual training school or a trade-school. Now, in such a school, granting that it were established, instruction should be given in the shop as well as in the school-room.

The author goes on to say: "The school should be provided with all the necessary facilities for instruction on subjects upon mechanical engineering, naval and civil architecture," etc., etc. Upon reading this, I inferred that the plan contemplated the thorough instruction of mechanical engineers. But I see that it is qualified by saying "subjects bearing upon." It will hardly be claimed at the present day with the large amount of literature which exists on mechanics, mechanical construction and mechanical engineering, that a boy who devotes a large portion of his time to manual work can accomplish much in the line of the studies here marked out. It has come to pass that a four-years course seems too short, not merely for young men who begin at fourteen but for those who begin at eighteen, in order to accomplish what is desired in the schools. It is intimated in the paper, that a young man who is trained in a thorough course of study will not follow the profession, but will turn aside into something else. In other words, that he will not come down to using his hands. Such may or may not be the case. I know of many young men who, after having taken the severest course in our schools, went through all the grades of labor in the shop; they went through more rapidly than the men who had not had a school education. They could accomplish more in the same time. In many cases special arrangements are made with the proprietors, so that they could be advanced as rapidly as their proficiency warranted. It is not necessarily the case that a young man receiving a high education will scorn the manual part.

The fact that some learn the profession entirely after graduation, and others engage in scientific and official labors, is no argument against the higher education. The same facts are true of all professional education. With the exception of those who forsake the profession, it is an argument in favor of such education; for the fact that many are retained in these new relations, and that others maintain themselves in their positions, is an experimental proof that such spheres of action are a desirable part of the social and business organisms of society. The graduate fills a place which the uneducated cannot, and, by coming in contact with business men and managers, creates a demand for the knowledge which he possesses, and which it is the province of the school only to supply.

The schools are the outgrowth of a desire and the necessity. Men having risen to positions of eminence in their profession

without education have desired knowledge, and schools have risen on account of that desire, and so far as they supply that want so far they are a success. If the school cannot give something that the shop cannot, then the school is a failure. The school is a place where sciences are to be learned. A manual training school has a different aim—more particularly that of training the hand. I am certain that this Society looks with favor upon the school, although its members may look upon it with different degrees of favor.

Some may assert that too much time is given to abstract study —that so little use is made, for instance, of higher mathematics that time may be more profitably spent in subjects called practical to the exclusion of such mathematics; but the student knows that many engineering subjects demand a knowledge of higher mathematics in order to investigate them, and it is the province of the school to give him the desired instruction. If not done in the school, it may not be done at all. The literature on engineering is manifold, ramifying all departments of physical science, and he who would attain to a fair knowledge of it must devote to it years of study. This, then, is a plea for the highest grade.

Now for the manual training. One of the greatest difficulties to be overcome in the manual training school at the present time is to secure instructors. There are teachers in our public schools to-day who have a genius for teaching manual training, but they are few in number. I stepped into our public school one day, and saw on the table a wooden shovel, and another article also of wood. I asked the teacher where he got them. He said he asked the scholars to bring in of their own handiwork these things, and this is the result. Now, that is a very simple illustration of what you will secure in a manual training school, and not every teacher can do it successfully. If manual training is enforced by law, many teachers will put on the air of doing it without the spirit, and it is the spirit that is wanted more than anything else. The law, however, should result in its more rapid development. A few years since great stress was laid upon object-teaching, and justly so. Many teachers without the name had been teaching by object lessons before it was known as a system. Now this manual training goes back of that, and instead of putting a machine or working device before the pupil, and requiring him to talk about it, the manual trainer requires the boy to make something with his own hand. Knowledge gained in this way will not be vague, but will be def

nite. Manual training, therefore, when properly managed, has its advantages both to boys and girls in the schools. Where it has been tried, it has excited so much interest that they have learned as much or more from books as they did without it. Their minds are awakened; they have an opportunity to do something; they are stimulated to action, and the result is beneficial. If the system involved the necessity of erecting extensive workshops and securing costly apparatus, it would fail in small districts. It is necessary for the advocates of this measure to move slowly if their work is to be permanent.

As regards trade-schools I have little to say, as those who understand their scope know just what they are for and how they should be managed. The old methods of the apprenticeship system were not agreeable to the boy who entered the shop. The language to him was often more forcible than polite. And if, instead of leaving him to hap-hazard ways, a good mechanic were appointed to go about and see what the young apprentice was doing, and give a hint here and a hint there, greater progress would be made, and it would be exceedingly beneficial to the young man, and I doubt not to the shop itself.

*Mr. Horace See.**—I would have been inclined to let the discussion stop here; but as certain misrepresentations have appeared in the press, and as some portion of the debates has been worded so that I am to be *construed by the press* as opposed to manual training, it will be incumbent upon me briefly to reply. Failing also to have certain corrections made in the quarter where the original misstatements were published, I think for this reason a brief rejoinder should appear in the Transactions of this Society.

Those gentlemen who attack my address do so because they say it is directed against manual training.

Neither directly nor indirectly is there a word which states or even implies anything which should lead to such a conclusion. The declaration that the manual training *school* (that is, one which follows the public school and of which there can be but few) is out of the reach of the masses, cannot be construed to mean that *manual training* is wrong, of no value and should not be incorporated in the public schools. Manual training is one thing, and a school where manual training and its kindred subjects *alone* are taught is another. A school which can be attended by

* Authors' Closure under the Rules.

the *masses* is one thing, and that which only a *few* can use is another. The gentlemen in their haste have confused the two things. In this they are like the two heroes of Cervantes, and have attacked that which is only the creation of their own brain.*

My address was written as a plea for the skilled workman, whose services, in this age, have arisen to such great prominence that the work of the engineer would be limited indeed without him. I think this is unmistakably put in the opening and closing sentences, as well as in the body of the address. My desire was to strip the subject of all sentimentality, to interest our profession in the production of a body of men whose services are so essential for successfully carrying out our plans, to incite them to encourage young men to enter the trades, by teaching them that it is ennobling to work with one's hands, and when they become skilled workmen to reward them for the skill which they display.

Some contend that the American youth should occupy a higher position than that of a workman; but what is more humiliating than the spectacle of thousands of our countrymen who have no trade, who daily are compelled to beg for work as common laborers? To those who enter industrial pursuits in a manly way, who endeavor to acquire the highest order of skill, who are not devoid of talent, high wages will be at their command as long as health and strength remain, whilst those who, puffed up by false pride, seek and enter seemingly respectable callings will be compelled to stand longer hours, receive smaller returns and liable at any moment to be thrust out of employment, with the difficulty of regaining it on account of the large surplus of such labor.

Our country is boundless, our resources unlimited, the opportunities great for those with brains, whilst our people—free from the restraints which encompass those who dwell in less favored lands—if filled with noble aspirations can make their own position and carve their own escutcheon. With these advantages resting upon them, it seems to me that they would be better off in this world's goods, much better citizens and the nation far stronger if a greater number were reared as skilled and intelligent workmen.

---

* How manual training is to be incorporated into the public school system, and what value we are to place upon the instruction given, is an entirely different subject.

CCCXXXII.

COMPARATIVE COST OF STEAM AND WATER POWER.

BY CHARLES H. MANNING, MANCHESTER, N. H.
(Member of the Society.)

THE circumstances under which steam and water come into competition as motive powers vary so widely with geographical situation, purpose to which the power is to be put, and other conditions too numerous to be mentioned in a short paper, that I shall confine myself pretty closely to the condition of things in cotton and woolen manufacturing along the valley of the Merrimack River.

Along this stream are situated Lawrence, Lowell, and Manchester, three of the leading textile manufacturing cities of New England, and cities, too, which were created by their water powers; so that if we can show that steam can compete successfully with water here, it surely can elsewhere in the same lines of production.

The history of the development of the cotton and wool industries of this country includes with it the development of the great water powers; for when these industries commenced to assume large proportions, the stationary steam engine was in its infancy, so that there was at that time no question as to what motive power it was best to adopt.

To get a fair understanding of the cost of the water power we must remember, first, that where a large power is improved and made available, the cost per unit of power is decreased proportionally, as well in maintenance as in first cost. Again, these large water powers, more especially those at Lawrence and Manchester, were developed by companies owning large extents of land made valuable by the sale of water powers at low figures, the companies making their profits by the sale of lands rather than by the water power.

The system at Lowell differs somewhat from the other two in that the water power is owned and controlled by a stock company made up of the manufacturing companies themselves in proportion to their water rights, therefore, as they buy from themselves, their prices, which, as a general thing, are lower than Law-

rence, may be taken as a pretty good guide as to the cost, as there is little object in their making themselves pay much of a profit.

The water power at Lawrence is owned and controlled by the Essex Company, and has been sold in mill powers, together with mill sites to the extent of about 130 mill powers. This unit of water power varies slightly in the different places, that in Lawrence being thirty (30) cubic feet of water per second on a fall of twenty-five (25) feet, whilst at Manchester it is thirty-eight (38) cubic feet per second on a fall of twenty (20) feet, the first being equivalent to 85.23 H.P. gross, and the latter to 86.36 H.P. gross.

At Lowell there are three different falls, but the average mill power there is about the same as at Lawrence.

The original cost of a mill power at Lawrence was ten thousand dollars, subject to an annual rental of three hundred dollars more, bringing the real cost to fifteen thousand dollars.

These tenants have also the right, under certain restrictions, to draw surplus water, paying for the first twenty per cent. additional, four dollars per day per mill power; for the next thirty per cent., or from twenty per cent. to fifty per cent., eight dollars per mill power per day; above fifty per cent. it drops back to four dollars per day again. At the present time the Essex Company leases mill powers at twelve hundred dollars per annum instead of the former method of a cash payment and rent. To summarize the foregoing:

Cost, per gross H.P. per annum, of water at Lawrence:

Under original leases	$10.55
Surplus water up to 20%	14.51
" " from 20% up to 50%	29.02
Under recent leases	14.08

At Lowell, "The Proprietors of The Locks and Canals" continue to charge themselves three hundred dollars per annum rent on all mill powers granted in the original leases, and charge five dollars per day per mill power for surplus water up to forty per cent.; exceeding forty and up to fifty per cent., ten dollars per day; from fifty to sixty per cent., twenty dollars per day; and when any one exceeds sixty per cent., they must pay twenty dollars per day per mill power for the entire surplus.

On the original leases cash payments of ten thousand dollars per mill power were made, so that on original leases the cost per gross H.P. is the same as at Lawrence, or, summarizing as before:

Cost, per gross H.P. per annum, of water at Lowell:

Under original leases	$10.55
Surplus water up to 40%	18.14
" " from 40 to 50 %	36.28
" " " 50 to 60 %	72.56

At this latter price water becomes an expensive luxury.

The original leases amount to about one hundred and forty mill powers, or nearly twelve thousand gross H.P., which at the present time is supplemented by about eighteen thousand H.P. of steam.

At Manchester the water power is owned by the Amoskeag Manufacturing Company, who made original grants at about the same terms as Lowell and Lawrence, except that as the mill power is a trifle greater, it makes the cost per gross H.P. a few cents less. For some years tenants were allowed to use surplus water without charge, but when the capacity of the power at low stages of the river was reached, a charge of five dollars per mill power for surplus water was made. This was the means of causing several of the mills to substitute auxiliary steam power for surplus water; but still later, the Amoskeag Company having reduced the charge to two dollars per day per mill power, tenants who are equipped to do so use surplus water whenever allowed.

We will summarize now for Manchester.

Cost per gross H.P. per annum at Manchester:

Under original leases	$10.42
Surplus water	7.15

It is usual in computing water powers to subtract one foot from the head as measured from still water, which is an allowance for loss of head in the water entering and leaving the wheel.

The efficiency of a first-class turbine should be about eighty-five per cent. of the net fall, so that if we consider that the average wheel that would be put in to-day will deliver to the shaft seventy-five per cent. of the gross power paid for, we shall not be far wrong.

Under these circumstances the net H.P. would cost $\frac{10.50}{.75} = 14.00$ for water under the original leases.

The cost of the plant will vary largely per H.P. inversely with the head under which it is used, as the greater the head the smaller the wheel for a given amount of power; but under a head of about

thirty feet, the cost of a modern plant of about 1,000 H.P. would be as follows:

Feeder headgates, rack, etc.	$3.70	per N. HP.
Steel penstocks	14.60	"
Wheelpits, piers, etc.	11.20	"
Wheels, casings, draft-tubes, and shafting	22.00	"
Total cost of plant	$51.50	"

To be able to maintain speed during freshet times, an extra allowance of wheel power is made, except where the wheels are placed between two canals, and this varies from twenty-five to fifty per cent., so as an average we will allow thirty-three and a third per cent., bringing this cost to $51.50 \times 1.33\frac{1}{3} = 68.67$. To this must be added, for a sinking fund for renewals, four per cent.; repairs, one and a half per cent.; proportion of general expenses, such as insurance, taxes, interest, etc., six per cent.

Summing these up:

Sinking fund	$2.75
Repairs	1.03
General expenses	4.12
Total	$7.90

Wages of a wheelman, at $2 per day for three hundred and nine days a year, would be $618, and supplies, such as packing, oil, and waste, $100 per annum, or about $.72 per H.P. per annum.

Total cost per N. H.P. per annum under original grants:

Cost of water	$14.00
Sinking fund, etc.	7.90
Attendance and supplies	.72
	$22.62

If the water is supplied from surplus at four dollars per mill power per day, this must be increased by $\frac{4 \times 309}{65} - 14 = 5.01$, making the cost $27.63; and by a similar computation, if the water is "surplus" at $2.00, the cost decreases to $16.20.

We now come to the consideration of the steam side of the question, which is a more complex matter, as the cost of steam power varies greatly with the uses to which a portion or the whole of the exhaust steam may be applied.

In a cotton mill where only white cloth is produced, there is very little use for exhaust or back-pressure steam, except for slashing the year around, and heating for from five to seven months; and undoubtedly the compound engine, using steam of one hundred and fifty lbs. pressure or over, and cylinders so proportioned as to allow a portion of the steam from the intermediate receiver to be used for heating, etc., is the best type.

In woolen mills, and cotton mills producing colored goods, there are large demands the year around for low-pressure steam for dyeing and drying purposes; and where such a mill is driven entirely by steam, there will in winter time be use for at least three-quarters of all the exhaust steam in the various processes.

If one-half of the mill is driven by water power, the engine to drive the remainder should be a simple engine, running always against a back pressure, in which case the power will be obtained at a very small cost.

We will consider only these two extreme cases, and in both we will consider 1,000 N. H.P.

A well-designed compound engine should, when using high steam, say of 150 lbs. gauge pressure, deliver to the shafting 93 per cent. of the H.P.; therefore, to deliver 1,000 N. H.P. the engine should indicate $\frac{1,000}{.93} = 1075$; but, to be liberal, we will make the calculation for 1,100 H.P. The engine is to run ten hours a day on speed, and, allowing for stopping and starting, this will amount to ten and one-quarter hours per day for three hundred and nine days a year. An engine of this type should be run on one and three-quarters pounds of coal per H.P., including all coal used for starting and banking, and we will take the average cost of such coal at $4.50 per long ton. This brings the cost per H.P. per annum for coal to $12.25, allowing no credit for exhaust steam used in heating, etc.

If the average use of steam from the receiver throughout the year is one-fourth of the whole, the engine should be charged with about one-tenth of the heat supplied by the fuel to this one-fourth; in other words, we must credit the engine with nine-tenths of one-fourth of cost of coal, which reduces the cost of coal to $9.49.

Engineer at $3.00, oiler at $1.50, two firemen at $1.50 each, and one coal-passer at $1.20, will make an annual pay-roll of $2,688.30, or $2.44 per H.P. per annum. Engine-room supplies, $250 per annum, or $.23 per H.P. per annum.

Summing up, we have:

Net coal chargeable to engine	$9.49	per H.P.
Attendance	2.44	"
Supplies	.23	"
Total running expenses	$12.16	"

COST OF PLANT.

Engine, including piping and foundation	$27.00	per H.P.
Engine-house	5.00	"
Boilers ready for use	10.00	"
Feed-pumps, injectors, etc	1.50	"
Boiler-house, chimney, and flues	6.00	"
Coal-shed, tracks, etc	3.00	"
Total	$52 50	

AS IN THE WATER PLANT.

Sinking fund at 5%	$2.62
Repairs 2½%	1.31
General expenses, insurance, taxes, interest, etc., 6%	3.15
Total	$7.08

COST PER H.P. PER ANNUM.

Running expenses	$12.16
Charges on plant	7.08
Total	$19.24

The cost per net horse power per annum will be eleven-tenths of this, or $21.16, which may justly be reduced by the proportion of fire-room expenses and boiler charges equivalent to the portion of the steam used for heating and slashing.

The other case which we will consider is where all the exhaust steam is used at a pressure of about ten pounds above the atmosphere, for other than power purposes. Under these circumstances the engine becomes the simple non-condensing engine corresponding to the high-pressure cylinder of the compound engine; or for very large powers the compound engine may be used, the low-pressure cylinder then being under much the same conditions as the intermediate of a triple-expansion.

In such an engine, single cylinder, the cost of coal per H.P. is

three pounds per hour, charging all the coal to the engine; but this can be reduced to two and a half; but we will take the larger amount.

If the efficiency of the boiler plant is 80 per cent., and the engine works between the limits of 150 lbs. per gauge initial pressure, and 10 pounds per gauge back pressure, it will convert about one-tenth of the total heat required from the fuel by the steam into useful work, or .3 of a pound of coal per H.P., which may be increased to .5 by the condensation in cylinder.

The boiler plant for such an engine will cost more than for the first engine considered, as there is a greater weight of water to be evaporated; but this is fully offset by the decreased cost of engine, especially if the single-cylinder type is chosen. The running expenses and charges on plant will be practically the same as in the former case; but a much larger deduction from fire-room expenses and boiler charges can justly be made from the cost of power.

Our cost of fuel chargeable to power is reduced in this case to $3.50 per H.P. per annum, and, other charges remaining the same, brings the total cost per H.P. per annum down to $13.25, and per net H.P. to $14.58.

At the Amoskeag Mills there is a pair of Corliss engines fitted to run this way with an initial steam pressure of 100 pounds per gauge running against 10 pounds back pressure, and these engines can be started at any time and run at 1,200 H.P. without its being felt in the boiler-house, by merely turning the steam for the dye-houses through the engine.

The cost in coal is so small that it falls within the daily variation from other causes, as frequently the consumption will decrease instead of increase when these engines are started.

To sum up, we have the cost per net horse-power per annum:

Water power under original leases	$22.62
Surplus water at $5 per M.P. per diem	27.63
" " at $2 per M.P. per diem	16.20
Compound engine, one-quarter exhaust, used for heater, etc.	12.16
Single-cylinder, all exhaust used	14.58

As the governing conditions vary in different localities, these computations must be changed accordingly; but when the increased facility of the steam-engine for close regulation of speed is weighed on the one hand, and the liability of water powers to flood, drought, and ice, I think most will decide in favor of the steam power.

DISCUSSION.

Prof. J. E. Denton.—When we have a chance to get right at th fountain head of the facts, as is evidently the case here, I am al ways provided with a few questions. At the debate last year o water-power I made a remark which, not having had time to pu into the discussion, I will repeat. It was, that there has not bee anything more variable in its estimates for many years back tha the relative cost of water and steam. You could find almost an sort of a showing by taking different statements. My remark wa that in the report of the Vienna Exposition, in summing up o water *versus* steam, it was stated that the cost of water-power i New England was placed at a very small fraction, something lik one-fifteenth or one-twentieth the cost of steam. A few month after that report was published, a hydraulic engineer from Phil delphia stated in the Journal of the Franklin Institute that th figures given in the Vienna report were taken from the Philade phia Water Works statistics and represented simply the cost waste oil in running their plant; there was nothing for repairs, an there was nothing for the real cost of the water-power. I believ now that we have the exact facts here for this Merrimack systen with one exception, which is the figure for the possible deterior tion of these great dams. And that is one question I wish t ask. Is the deterioration of the dams considered in the figur given by Mr. Manning? The cost is stated here of gener expenses, insurance, taxes, interest and sinking fund. Does th sinking fund cover the cost of reconstruction of these great dan —which, as I understand it, were built in some cases at a larg price to the parties owning them, and then passed into secon hands at a cheaper price—and the water rental put on the bas of the repurchase? I believe that is the case at Holyoke. would like to ask also whether the allowance of one and thre quarters pounds for compound engines is from actual measur ments over a considerable period of time? As far as I can lear a more proper allowance there would be about two pounds. have seen a number of statements that these compound engin in that district use generally 16½ pounds of water to a hors power. It would require an evaporation, averaging banking fir and all, of about nine pounds to bring it to a pound and thre quarters. I am skeptical about any boiler being able to evaporat much over eight pounds on an average, day in and day out, inclu

ing banking fires. My idea would be, therefore, that the allowance of coal ought to be increased to about $1.50. I do not put this as authoritative, but simply in such a form that Mr. Manning will be sure to reply to it.

Again, taking the case where the non-condensing engine is used in a dye-house. As the portion of the steam going through that engine devoted to work is only a small portion, you get 90 per cent. of that steam for use in the dye-house, and the 10 per cent. difference cannot be noticed, as I understand it. If that is the case, why is one-third the cost of the steam put in against that engine? How is that one-third arrived at? Is it merely a guess? Or is it really a proper allowance for that case?

Mr. S. J. MacFarren.—While I am free to say that Mr. Manning's paper was a surprise to me, as one of those who thought that water-power was the cheapest, and while, of course, I do not question any of those conclusions for a moment, especially in cases where there is a large demand for large amounts of low-pressure steam, I would like to supplement the discussion by saying that I lived for some four years in Northern Mexico, where the whole table-land region, perhaps two thousand miles in length, abounds in water-powers, and where fuel is almost prohibitory in cost. Although there are timber-lands, transportation is excessive, and wood at the factory costs at the most favorable place I know of $3.50. I know of places where wood sells for $15 and $18 per cord, and coal and coke on the line of the Mexican Central Road is $18 or $20 per ton. For pure power purposes, water-power is often a great deal the cheapest.

Prof. Denton.—I would like to add one word. I know of a case at home right here, within fifty miles of New York. Those cases that the gentleman speaks of I know are very prevalent. But we cannot get any exact data about them. The case of water-power which I have in mind is a 75 H. P. plant at the Forest of Dean Mine Dock of Cornwall, on the Hudson River. Power is desired to operate a Cornish pump at the bottom of a mine about 300 feet deep. The ponderous nature of the pump-rods, which run horizontally above ground for about a hundred feet, limit the speed to six revolutions per minute. Power is also required to operate an air-compressor.

Water is taken from a small lake, giving a fair surplus all the year round, and drives an overshot wheel forty feet in diameter at the rate of about eleven revolutions per minute. Spur gears of

2 to 1 ratio give the necessary motion to the pump-rod and air-compressor. The cost of the wheel is about the same as that of a steam-engine and boiler fitted to the work. Coal would have to be drawn to the mine up the Palisades, and over such a distance that its cost would greatly exceed that of the water. This case is also remarkable from the fact that a turbine-wheel could not be economically applied, as it would have to run so fast that to gear down to the six revolutions required for the pump would involve an impracticable application of gearing.

*Mr. Manning.**—The allowance of 1¾ pounds for running the compound engine, including the banking of fires, is taken from the engines of the Nurse Mills, which were tested very carefully by reliable parties, and the cost came inside of that. That was with new boilers and everything in good working order. The pressure of steam, as I recollect it now, was 120 pounds. That has been exceeded. Better results than that even have been obtained. The next point as to evaporation of the boiler requiring nine pounds and over, that is not a difficult feat by any means. A properly designed boiler will evaporate over ten pounds of water from feed of 100 to 120 degrees to steam of 100 pounds. If the gentleman is dubious on the subject, if he will come up and see me some day, I will show him how it is done. The figures were based largely on my experience at the Amoskeag Mills. The difficulties of obtaining exact cost, except from the known evaporation of the boiler by boiler test, and the weight of water accounted for in the engine, comes in from the fact that the whole steam plant is run practically by one pipe. There are several large pairs of engines, two large presses, and one large compound and other small engines, all receiving steam from the same pipe and always in operation at the same time, besides very many other uses, so that it is impossible to get a test there from the measurement of the water evaporated, the coal to do it, and the performance of any one engine. The figures given, I think, can be pretty readily substantiated from the fact.

Prof. Denton.—The allowance of $3.50, on page 505, Mr. Manning, is that from a measurement or a guess?

Mr. Manning.—No, sir, that is not a guess. That is the credit given from the actual work done by the steam.

---

* Author's closure under the rules.

CCCXXXIII.

THE OLD LOCOMOTIVE "SAMPSON."

BY D W. ROBB, AMHERST, N. S.
(Member of the Society.)

At the Albion coal-mines in Pictou County, Nova Scotia, may be found a curious collection of old machinery, mostly lying rusty and disused, which, to the engineer of to-day, recalls the times of Watt and Stephenson, and the early days of the steam-engine. While making a recent visit to this place, the writer was shown many mechanical curiosities, notably three old locomotives, built by Timothy Hackworth in the shops of the Stockton and Darlington Railway, in England, in the year 1838; also a condensing beam engine, built about 1828, with ponderous flywheel and square driving shaft. A blowing cylinder, used to supply air to a foundry cupola of ancient construction, still in use, is connected with one end of the beam, the crank shaft being connected with the other end and the steam cylinder nearer the center of the beam. Steam for this engine was furnished by an old-fashioned egg-shaped boiler. The working pressure did not exceed five pounds above the atmosphere, and the water was supplied by gravity from a tank placed a few feet above it. Leaks were repaired by simply fitting a plate over the leak, in the inside, well packed with potatoes or horse dung, the very moderate pressure rendering rivets or bolts unnecessary. One of the locomotives referred to, the "Sampson," was in use as late as the year 1882, is in a fairly good state of preservation, and, as it is a good example of the first English locomotives, a brief description may not be uninteresting. As previously stated, it was built at the repair shops of the Stockton and Darlington Railway, at New Sheldon, Durham Co., England, and was brought out with two similar locomotives, in 1839, to run on a railway, built for the Albion mines, to convey coal from its pits at Stellarton, to Pictou Harbor, a distance of six miles. As will be seen from the illustration (Fig. 114), the "Sampson" has three pairs of driving wheels, coupled in the usual manner, and not differing very much in appearance from the driving wheels of the modern

"mogul" locomotives. These wheels consist of a cast-iron cer and an outer rim, also of cast iron, twelve wooden plugs be

Fig. 114

driven between the center and rim to hold the rim in place. tires are of iron or steel, shrunk on in the usual manner. axles, which are five and five-eighths inches in diameter, rui

ordinary journal boxes, bolted to brackets made of boiler plate, which are riveted to the shell of the boiler (Fig. 111). The boiler is a plain cylindrical shell, fifty-four inches in diameter, and about thirteen feet long, containing a single return flue, twenty inches in diameter; one end being fitted with grates was used as a furnace. The products of combustion following the flue to the front end of the boiler, were then returned direct to the smoke-stack, which is at the rear end of the locomotive (Fig. 112). The cylinders and driving gear are at the front end of the locomotive, and the driver's place was at the front, so that he could keep a good lookout ahead. The fireman was stationed at the rear.

The cylinders ($15\frac{3}{8}''$ dia. × 18″ stroke) are vertical, resting on cast-iron box-like frames, forming part of a bonnet or hood which partially encloses the valve gear, pumps, throttle and reversing levers and other working parts. The cross heads, instead of being guided by slides in the ordinary way, have an arrangement of levers and sliding block (Fig. 113). That this device caused very little friction is shown by the fact that the original pins and brass bushes in the levers and sliding block are still in place, and show very little wear, after forty years of almost constant use. The valve gear consists of four eccentrics, attached to the axle to which the cylinders are connected; the eccentric rods extending up into the hood on the front end of the boiler, have forked ends which engage the pins of a rock arm, which is connected with the slide valves; these eccentric rods are controlled by the reversing lever, respectively engaging or disengaging them for the forward or backward motion (Fig. 112). The feed pumps, two in number, are connected with the eccentric rods, and were thus brought within the hood in full view of the driver; in fact, this arrangement of cylinders and valve motion gave the driver a convenient oversight of all the working parts of the engine while in motion, and without leaving his place; but, strange to say, he was compelled to go outside to ascertain the height of water or pressure of steam, the water gauges and steam gauge being located on the side of the boiler. The steam gauge consists of a spring scale attached to the lever of the safety-valve. The pressure of steam did not exceed forty pounds, the spring scale being graduated to fifty. The exhaust steam after leaving the cylinders was conveyed within the shell of the boiler (Fig. 112) to the smoke-stack. The reason for thus reheating the exhaust steam is difficult to understand. Probably the idea was that the heat of the exhaust could be utilized within

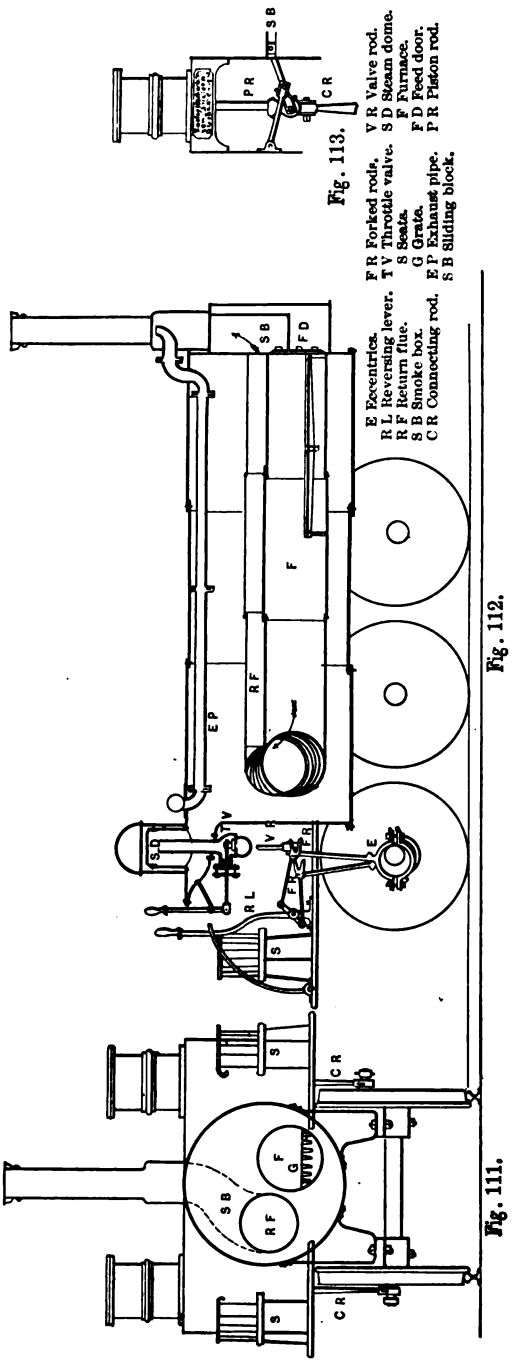

Fig. 111.

Fig. 112.

Fig. 113.

the boiler, the designer overlooking or not clearly understanding the higher temperature of the live steam within the boiler.

That the engineers of that date (1838) had, to some extent, grasped the requirements of locomotive construction, may be gathered from the many devices made use of in this early representative of the "species locomotive" which are still in use; such as the three pairs of coupled driving wheels, placed as near together as possible, the center pair being without flange, the forced draught obtained by means of the exhaust in the smoke-stack, and the cylinders connected outside the frame.

One of these locomotives was driven by George Davidson, who worked on them while being built in England, and came out to Nova Scotia with them in 1839; he is therefore one of the oldest if not the oldest locomotive driver in America. He is still hale and hearty, and tells many reminiscences of his forty years on the rail. Donald Thompson, a "canny Scot," and another faithful veteran, scorns the modern locomotive with its complicated gauges, air-brakes, etc., and delights to recount a feat of hauling a train of about one hundred and eighty-nine tons of coal out of a crooked siding on a wet day, which one of the Intercolonial R. R. engines failed to move. In reply to the writer's inquiry as to the effect of winter weather on the unprotected, cabless "Sampson," the veteran replied: "Au' the rain an' wind an' snaw for forty year never made auld Donald Tampson shiever yet." Further interrogation as to the care of his engine elicited the following: "'Deed an' I was far more carefu' o' her than of the gude wife."

The sand-box of the "Sampson" consisted of two buckets of sand, one at each end of the locomotive, the sand being thrown by hand on the rails. This duty was attended to by the driver when moving ahead, and by the fireman when moving backward.

CCCXXXIV.

NOTES ON THE COMPARATIVE LOSS BY FRICTI IN A TRANSMITTING DYNAMOMETER UNDER 1 FERENT LOADS AND SPEEDS.

BY SAMUEL WEBBER, CHARLESTOWN, N. H.

(Member of the Society.)

THE writer of this paper spoke, at the Philadelphia Meetir the Society in 1887, of sundry records in his possession, of a s of experiments made in 1871, in order to ascertain the amount proportion of power absorbed by a balance dynamometer, in t mitting through it different loads at different velocities. Gr to his surprise then, the friction was found to remain con under a very considerable increase of load and to vary slightly the velocity, and as the experiments described then and by Professor Thurston have fully firmed the results which I then ar at, I have looked up my old notes tabulated a portion of them in such as to show not only the constancy o friction in the dynamometer, but the consequent decrease of the c cient of friction, thereby confir the results reported by Mr. C. J Woodbury, at the meeting of No ber,* 1884.

FIG. 115.

The dynamometer used in thes periments was the same in princip the one shown in the illustration somewhat different in form of cons tion, the receiving and delivering pulleys standing horizontal each other, instead of vertically. The belt from the shaft wa ried to the lower pair of pulleys, so as to operate directly o steelyard, and a bronze friction pulley, 12″ diameter and 4″ was substituted for the pair of pulleys on the other shaft. T

* Trans. A. S. M. E., Vol. VI., p. 136, No. CLXIII.

friction pulley was fitted a Prony brake, having a lever of the same length as the steelyard shown, or the radius of a 10 ft. circle or 19.0985 inches, as accurately as it was possible to measure it. The brake was made of ash, and lined with blocks of cork, leaving spaces between them, which were filled with flannel soaked in oil, and a small stream of water, to cool the pulley, was supplied by a funnel on the top of the brake. A dash-pot similar to the one shown on the steelyard was also attached to the brake to steady the motion. The first 125 experiments were rejected, as there was a continual change, although agreeing generally with the later tests. After that time, the brake seemed to have worn to a smooth fit on the pulley, and the operator who managed it had become accustomed to the use of the clamp-screws, so that he was able to keep the brake perfectly level. The numbers do not read in exactly consecutive order, as the driving pulleys were changed many times, and as these changes were usually made at noon or at night, when the shafting was stopped, the experiments recorded reached over several days, during which the weather and temperature were variable, which will account for some of the variations in friction shown.

The speed was also variable, the trial having been made at the end of several lines of shafting, connected by various belts, and several hundred feet distant from the source of power.

Still with these variations, there is a general uniformity in the results, which show that when the dynamometer was once in motion, a largely increased power might be transmitted through it without increase in the internal friction of the machine, which corroborates Professor Thurston's experiments with the steam engine, and consequently, that the coefficient of friction diminished with the load, which confirms those of Mr. C. J. H. Woodbury.

As I believe that all ascertained facts should have a permanent record, I am desirous that these data should be included in the publications of the Society, and also because they answer the questions which have been asked me by members, as to how any reliable measure of different powers could be obtained by a transmitting dynamometer; such members having been under the impression that the friction in the dynamometer would vary with the load transmitted. These trials showed me that it did not, and during a long period, comprising a number of years and covering many thousand weighings, I have simply taken the power absorbed by the dynamometer, when running without a load, and deducted it from

the total weighing of the machine tested. I have found, as these tables show, a slight increase in the friction, with increase of velocity, but in no ascertainable proportion to such increase.

It will be seen by examination of the cut of the dynamometer, that these tests showed the whole power absorbed by it, with the exception of that which disappeared at the first bearing and pair of bevels, and as in the ordinary use of the instrument the power would be applied in the reverse direction, or with the driving belt acting on the upper shaft and pulleys, the weighing of the dynamometer without a load would register very closely the amount of power consumed in it, and the comparison of the results obtained by a summary of such weighings, in a large number of cotton mills, with those derived from indicator cards taken from the steam engines, as well as with the calculated results from different well known and thoroughly verified turbines, have shown such a close agreement, and so small a percentage of difference, as to satisfy me that such a dynamometer is a perfectly efficient and reliable instrument.

My experience with spring dynamometers has not been satisfactory, but I believe that the one used in these experiments can be depended upon, as is also the case with the "Emerson power scale," the difference between them being that this instrument includes in its weighing the power required for the belt to the machine, while the Emerson power scale only weighs the power of the machine itself, *minus* the driving belt, and therefore falls short in the summary, when applied to a single machine. If inserted in a line of shafting, I believe it will register the power transmitted by that shaft accurately.

FRICTIONAL EXPERIMENTS WITH TRANSMITTING DYNAMOMETER.

APRIL AND MAY, 1871.

No. of Experiment.	Diameter Driving Pulley.	R. P. M. Dynam'r.	Lbs. on Brake.	Lbs. on Steelyard.	Ft. lbs. on Brake per sec. 550 = 1 H. P.	Ft. lbs. per sec. on Steelyard of Dynam'r.	Coeff. Friction.	NOTES.
129	8″	197	1	1.8	32.79	59.01	.4444	
130	8″	197	2	2.9	65.57	95.68	.3104	
131	8″	197	3	3.9	98.36	127.87	.2308	
132	8″	197	4	4.9	131.15	160.05	.1836	
133	8″	198	5	5.9	165.29	195.04	.1526	
134	8″	200	6	6.9	200	230	.1305	
135	8″	200	7	7.9	233.55	263.33	.1140	
136	8″	200	8	8.9	266.66	296.66	.1012	
137	8″	200	9	9.9	300	330	.0919	
138	8″	200	10	10.9	333.33	363.33	.0826	
139	8″	197	10	10.8	327.87	354.09	.0741	Day after above.
140	8″	197	11	11.8	360.65	386.83	.0678	Day after above.
141	8″	197	12	12.8	393.44	419.67	.0626	Day after above.
142	8″	197	13	13.8	426 23	452.46	.0580	Day after above.
143	8″	197	14	14.8	459.01	485.23	.0541	Day after above.
144	8″	200	15	15.8	500	526.66	.0507	Day after above.
145	8″	198	16	16.8	528.92	555.87	.0476	Day after above.
146	8″	197	17	17.8	557.37	583.6	.0450	Day after above.
147	8″	197	18	18.8	590.19	616.39	.0425	Day after above.
148	8″	198	19	19.8	628.10	654.54	.0404	Day after above.
149	8″	197	20	20.8	655.73	681.97	.0383	Day after above.
202	8″	198	3	3.6	99.17	119	.1446	Several days later, room and weather warmer.
203	8″	198	5	5.6	165.29	185.12	.1071	
204	8″	197	10	10.6	327.87	347.54	.0566	
199	12″	286	3	3.64	142.86	173.33	.1758	
200	12″	282	5	5.64	235.21	265.41	.1100	
201	12″	278	10	10.64	459.77	489.19	.0597	
196	16″	390	3	3.70	194.8	240.26	.1892	
197	16″	387	5	5.70	322.58	367.74	.1228	
198	16″	385	10	10.70	641.02	685.9	.0654	
171	18″	428	3	3.92	214.28	280	.2347	Cool and damp.
172	18″	428	5	5.92	357.14	422.85	.1554	
173	18″	428	7	7.92	500	565.71	.1162	
174	18″	417	10	10.92	694.64	758.33	.0842	
175	18″	417	12	12.92	833.33	897.22	.0690	
176	18″	400	20	20.92	1333.33	1394.66	.0440	
192	20″	488	3	3.74	243.9	304.06	.1979	Warmer day, see Nos. 202–4.
193	20″	480	5	5.74	400	459.20	.1289	
194	20″	440	10	10.74	735.29	789.70	.0699	
177	24″	571	3	3.86	285.71	367.62	.2228	
178	24″	571	5	5.86	476.19	558.09	.1471	
179	24″	548	10	10.86	925.92	1005.05	.0725	
180	24″	526	20	20.86	1754.38	1829.82	.0412	
189	24″	548	3	3.81	277.77	352.77	.2126	Last series repeated. Warmer day.
190	24″	577	5	5.81	480.77	558.65	.1394	
191	24″	566	10	10.81	943.40	1019.81	.0749	

FRICTIONAL EXPERIMENTS.—*Continued.*

No. of Experiment.	Diameter Driving Pulley.	R.P.M. Dynam'r.	Lbs. on brake.	Lbs. on Steelyard.	Ft. lbs. on Brake per sec. 550 = 1 H. P.	Ft. lbs. per sec. on Steelyard of Dynam'r.	Coeff. Friction.	NOTES.
185	30″	714	3	3.9	357.14	464.28	.2284	
183	30″	700	5	5.9	581.40	686.05	.1526	
187	30″	682	10	10.9	1136.36	1238.63	.0777	
188	30″	652	15	15.9	1630.43	1728.26	.0566	
184	30″	620	20	21	2061.86	2164.95	.0476	
153	36″	828	5	6.25	689.66	862.07	.20	
154	36″	857	6	7.25	857.14	1035.71	.1724	
155	36″	882	10	11.25	1470.59	1654.41	.1111	
159	36″	800	18	19.25	2400	2566.66	.0649	
158	36″	800	19	20.25	2533.33	2700	.0617	
157	36″	800	20	21.25	2666.66	2833.33	.0588	
205	36″	857	3	4.06	428.57	580	.2611	Last trials repeated. Warmer day. Belt tightened.
206	36″	839	5	6.06	699.30	847.55	.1749	
207	36″	822	10	11.06	1369.88	1515.07	.0959	

DISCUSSION.

Prof. J. E. Denton.—If I understand this paper, it seems to me inaccurate to claim that it records any measurement of a coefficient of friction which confirms the experiments on the friction of engines discussed at previous meetings. Mr. Webber has a table of coefficients in his paper which is the ratio of the power lost in friction to the power transmitted. But he includes the friction of the entire apparatus, embracing four bevel gears, two driving-pulleys, two spur-gears, and all the miscellaneous details. It is impossible to say that this ratio is the coefficient of friction on any *one* bearing, and it therefore does not confirm Mr. Woodbury's experiments in my opinion at all. I want very carefully to assert to-day that I do not believe there is a particle of proof in any investigation of friction ever made, that Morin's laws do not hold for ordinary practical oil-cups or restricted rates of feed. I have reviewed this point in the last volume of the Transactions in connection with Prof. Thurston's paper.

Prof. Wood.—I want to ask Prof. Denton one question. You speak in your remarks about the friction. Did you mean the friction or the coefficient?

Prof. Denton.—I mean that the coefficient of friction is practically constant.

Prof. Wood.—When you spoke of the shaft and the bearings, you meant the coefficient?

Prof. Denton.—Yes, sir.

Mr. C. J. H. Woodbury.—I find some reference has been made in the paper to former experiments of mine. I need only call attention to the fact that I read several years ago two papers before the Society, in which I expressly stated that the variation of the coefficient at different pressures was limited as a practical matter only to the smaller pressures which exist, especially in spinning machinery, where the pressure is so light and the film of oil so thick that the viscosity of the oil is an important part of the frictional resistance of the material.

Prof. Denton.—I would like to add a word in view of Mr. Woodbury's remarks, that in my discussion in bringing up this point I agreed with Mr. Woodbury entirely, that his experiments, just as he says, did apply to these particular conditions, and all that he claimed was thoroughly true; but that it does not fit Morin's conclusions. Morin worked at practical shafting fed with oil in the ordinary way.

*Mr. Samuel Webber.**—I am not aware that the actual and ascertained facts of the paper, carefully noted during many days with the assistance of a skillful practical mechanic, need any argument on my part to sustain them.

Called out by Prof. Thurston's papers on the internal resistance of engines, they corroborate them fully in showing that a large increase of power was transmitted through the dynamometer without any perceptible increase in its internal friction, and that they agree thus with Mr. Woodbury in showing a great decrease in what I have called the coefficient of friction due to the load.

In a paper which I have in my possession, given me by Mr. Woodbury in 1883, he makes the coefficient of friction under a pressure of 1 pound per square inch .1700, under a pressure of 10 pounds per square inch .0348, under a pressure of 20 pounds per square inch .0257, and under a pressure of 40 pounds per square inch .0201, and it is these results which I have said my notes confirm.

I have not attacked Morin in any way, but may say that hav-

* Author's closure under the Rules.

ing met him personally in early life, and knowing something of the conditions under which his experiments were made, I consider myself fully competent to judge as to the value of those experiments, and whether they limit the extent of human knowledge as to the laws of friction. I do not propose to say that the term "coefficient of friction," as I use it in the paper, is exact as to the friction of any one bearing or gear, but it was the only available term I could use to represent the proportion of the total of transmitted power absorbed in the transmitting instrument.

Whatever previous theories these facts may conflict with, they *are facts*, and as such are presented for record.

CCCXXXV.

CORNISH OR DOUBLE-BEAT PUMP VALVES.

BY A. F. NAGLE, CHICAGO, ILL.
(Member of the Society.)

In the earlier studies of the writer there were few problems which perplexed him more than to find a satisfactory theory for the construction of a double-beat pump valve. The text-books were silent on the subject, and engineering journals contained only illustrations without sufficient data for any analytical investigation. Hence he had to gather what facts could be found, and attempt to formulate a theory.

Valves were found with seats nearly an inch in width, sometimes flat and sometimes beveled. The unbalanced area was rarely determinable, and the weight was never given. The possible lift was frequently noted, but whether the valve ever reached this limit was not recorded. Sometimes valves were known to rise with such force as to break the stop provided, and then again they would seat with such violence as to endanger the safety of the pump. There seemed to be no intelligent practice on the subject, and the problem was evidently one which theory could not solve, and the only way was to make something, and then experiment with weights, springs, and air snifted or pumped in, until something passably good was arrived at.

The principal features into which the subject appeared to divide itself were:

1. The width of seats.
2. The unbalanced area.
3. Its weight.
4. Its lift.
5. Its form of body.

1. *The width of seat.* What should be the width of a valve seat? Theoretically, a knife edge, so that the same area should be presented to the water pressure before as after it is lifted. Practically, only sufficiently wide to sustain the pressure brought to

bear upon it without injury to the metal. Brass should sustain a pressure of at least 1,000 lbs. per square inch of surface with safety and permanency. This is less than one-thirtieth of its crushing strength, and only about two-thirds the pressure brought upon crank-pin journals. The comparison with a revolving journal is not perfect, but if the valve seats gently, as it should, 1,000 lbs. per square inch would not seem to be too great. Upon this basis my valve would have less than one-quarter the width of seat of any known previous practice. I knew of no reason why the seat should be flat, for it is much more likely to lodge dirt or sand than a beveled one, and the latter would also be more conducive to an easy flow of water.

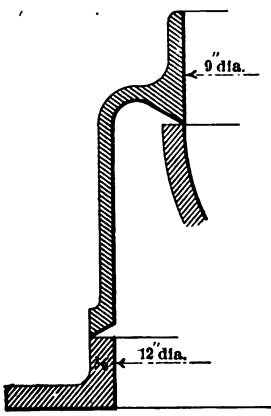

Fig. 116.

2. *The unbalanced area.* With a wide seat it is impossible to know exactly what the unbalanced area of a valve really is. It may be that of either extreme between the inside or outside diameters, as indicated in Figs. 116 and 117, or it may be a yet worse case if the bearing should be perfect over its entire surface, like Fig. 118, where it may approximate to a vacuum between the faces.

Upon the supposition of this the extreme condition, as shown in Fig. 118, an illustrative case will attract attention as the possible explanation for the violent and noisy action of many double-beat valves. Assume a valve whose lower-seat inside diameter is 12 inches, and upper outside diameter 9 inches, width of seats one-half inch, and a water pressure of 80 lbs. per square inch. We now find

The area of 13 inches = ... 132.73 sq. in.
The area of 9 inches = ... 63.62 sq. in.
Unbalanced area by outside diameters..... .... 69.11 sq. in.
Area of 12 inches = ... 113.10 sq. in.

Area of 10 inches = ... 78.54 sq. in.
Unbalanced area by inside diameters ..... 34.56 sq. in.
Seat area 100 per cent. of inside unbalanced area, and about 80 × 69.11 ÷ 34.55 = 160 lbs. pressure per square inch of surface.

Extreme pressure required to open the valve, exclusive of its weight, is (80 + 15) × 69.11 ÷ 34.56 = 190 pounds per square inch, more than double the static or normal pressure. If we assume but a slight air pocket inside of the valve, in which the air will be compressed to this great pressure, is it not evident that, at the instant of opening, the valve will be projected upward with great force? Even if we do not assume a vacuum to exist between the faces, it is still certain that something less than the normal pressure must be between the faces, or the valve would be in a leaky condition; and hence there must inevitably be required a greater pressure per square inch to start the valve than exists outside of it, and this condition is one which accounts for the shocks and noise of these valves.

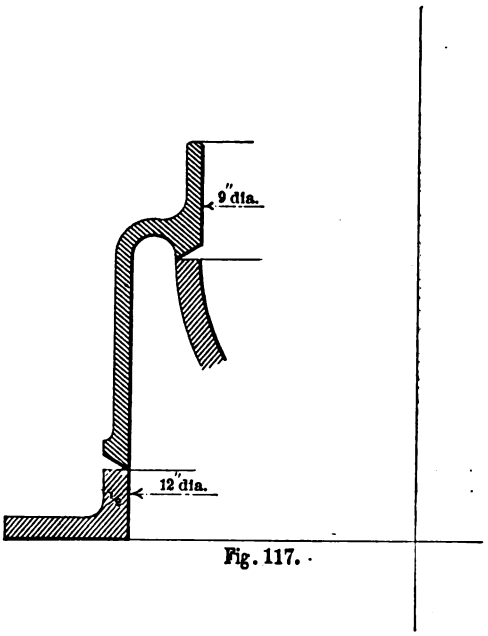

Fig. 117.

3. *The weight of the valve.* I thought it was the weight of the valve, if free to move, which determined the velocity of discharge through it. If the valve is large in diameter compared with its lift, so that the velocity of approach becomes so small that it could be ignored, and its form of such gentle curves that no violent impingement occurs, then it would seem that the weight per square inch of unbalanced area must govern the flow or velocity; for it is this weight which is the equivalent of a pressure upon the water within the valve which causes the outward flow. And if this theory were correct, then the flow through it would have the same velocity at any position it might be in, and the valve should

rise and fall in exact proportion to the changing velocity of the plunger. If, on the other hand, the valve be of irregular form, very light, and the velocity of approach very great, then the calculation for its action would be very complicated.

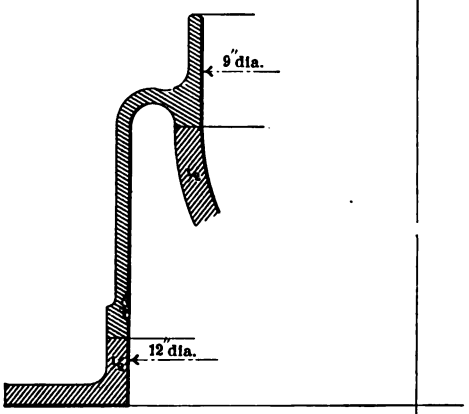

Fig. 118.

4. *Its lift.* This is practically answered in the last section. The velocity being determined by the weight, and always the same for the same weight, then its lift would naturally adjust itself to the changing speed of the plunger, so that the requisite water might be supplied to it or discharged from it. If, for example, a valve weighed one pound per square inch of its inside unbalanced area, it was reasoned that the velocity through the valve would be that due to this pressure, or, applying the well-known formula:

$$v = 8.03 \times \sqrt{h},$$

$$v = 12.20 \text{ feet per second.}$$

The size of the plunger and its velocity, and the number of valves, now determine the lift of each valve.

5th. *The form of the valve.* First of all, there should be no air pockets, such as are possible in such forms as are shown in Figs. 116, 117, or 118. The curves should all be of easy lines in order to avoid impact, it being reasoned that flat surfaces, particularly at the upper bend of the valve, would cause an impact which would make the valve rise more than that due to the pressure produced by the velocity. An extreme view would be that if a square elbow, or right-angled turn, were made at the upper end, the pressure would be double that due to the velocity, comparing the effect with the relation of square elbows to easy bends in pipes.

With these theories in mind I constructed the pump valves for

the High Service Pumping Engine at Providence, R. I. The engine is of the vertical compound type, with cranks exactly opposite each other (the first instance of the kind in this country, I believe, 1874) and geared 1 to 5, driving two horizontal double-acting plunger pumps. For full description of this engine see *Franklin Institute Journal* for September, 1876. The plungers

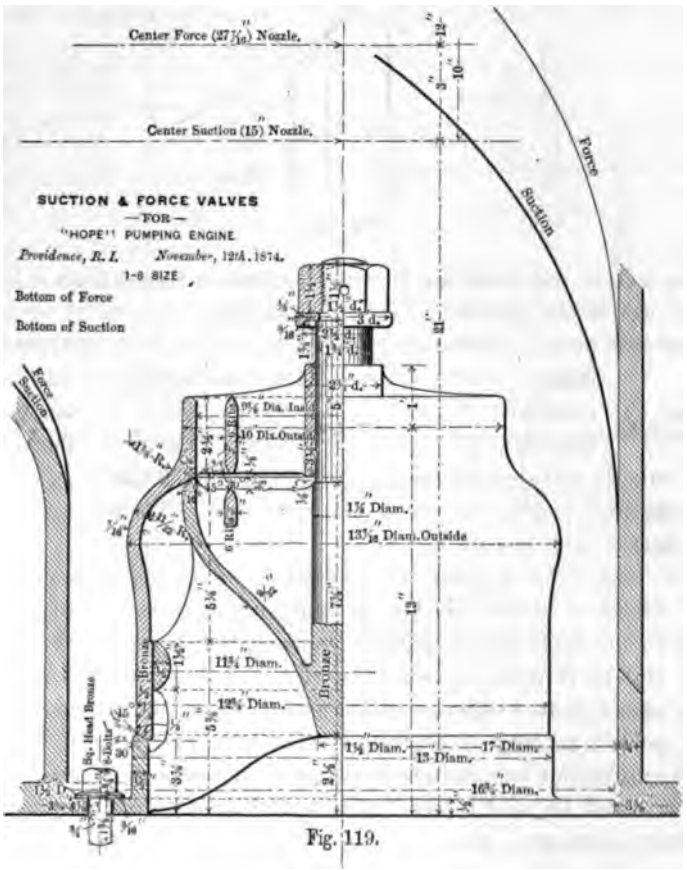

Fig. 119.

are 17 inches in diameter and 4 feet stroke, and the greatest speed about 20 revolutions per minute.. All the valves were of the same size, and only one for each inlet or outlet, and that was 12 inches in diameter at the lower seat, and 9⅛ inches at the upper. The seats were designed to be three-eighths of an inch wide, but the *seats*, not the *valves*, were actually chamfered so that only one-eighth of an inch bearing-surface remained.

Fig. 119 is a vertical section of the valve, and Fig. 120 a full-size section of the seat.

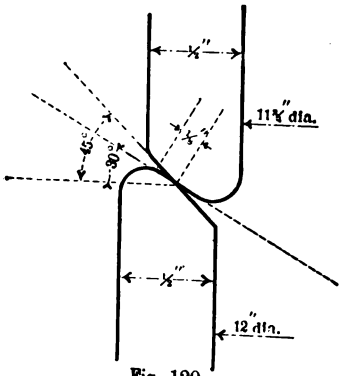

Fig. 120.

The weight was 53.44 lbs. in water, one-seventh less than in the air.

Mean net water pressure	=	52 lbs.		
Lower seat outside diameter		$12\frac{3}{4}''$	=	127.68 sq. in.
" " inside "		$12\frac{1}{2}''$	=	122.72 "
Upper " outside "		$9\frac{1}{8}$	=	65.40 "
" " inside "		$9\frac{3}{8}$	=	69.03 "
Net outside unbalanced area		=	62.28	"
" inside " "		=	53.69	"
Seat area		=	8.59	"

The seat area is only 16 per cent. of inside area, and only $52 \times 62.28 \div 8.59 = 377$ lbs. pressure per square inch of surface.

Upon the theory of a perfect seating, the pressure required to open the valve would be $62.28 \times (52 + 15) \div 53.69 = 77.31$ lbs.

I confess that I am somewhat skeptical as to the possibility of such perfect seating of a ground valve as to produce the condition of a vacuum, but somewhere between a vacuum and the water pressure it must be, and I have assumed this extreme condition the better to illustrate a theory.

These valves worked noiselessly at the greatest speed, and after six months' run the grinding-marks were not worn away.

It will be observed that the valve weighed just about 1 lb. per sq. inch of inside unbalanced area, and hence, if the theory advanced in section 3 were correct, the velocity of the water through it should have been 12.20 ft. per second. It proved to be fully 20.00 ft. per second.

In order to learn how much truth there was in these theories, I

took several indicator cards directly from the valve itself. A small brass rod ($\frac{3}{16}''$) came through a stuffing-box directly over the center of the valve, and over this was placed an old-fashioned MacNaught indicator with a light spring. Just how much this stuffing-box and spring affected the correctness of the diagram it is impossible to say, but care was taken that at the instant of taking the cards the stuffing-box would be very free.

These cards are reproduced at full size in Figs. 121, 122, and 123,

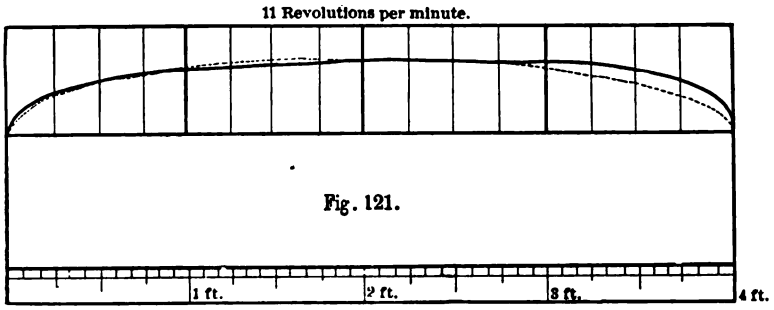

Fig. 121.

Position of Piston.
Heavy Line traced by Indicator Piston attached to Valve.
Dotted Lines Velocity of Pump Plunger.

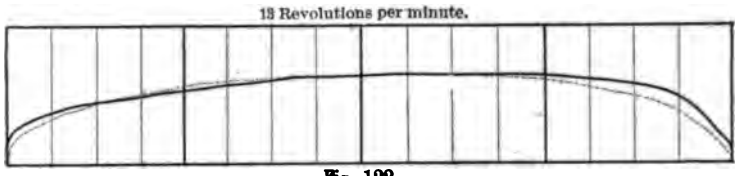

Fig. 122.

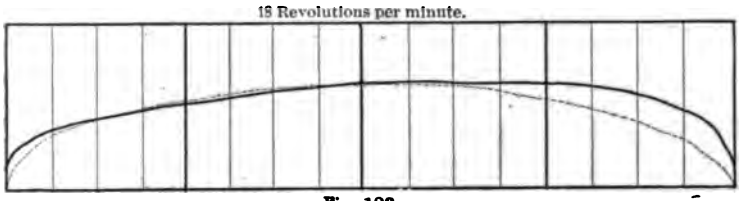

Fig. 123.

and the dotted lines are added to represent the line of velocities of the plunger at all points of the stroke.

Fig. 124 is an enlargement of a card taken at 8.75 revolutions per minute in order to show more perfectly the relation of the two lines.

The greatest lift attained at

11 rev.	per min.	=	$\frac{3}{8}$	inches	=	.032	ft.
13 "	"	=	$\frac{15}{32}$	"	=	.039	"
18 "	"	=	$\frac{9}{16}$	"	=	.047	"

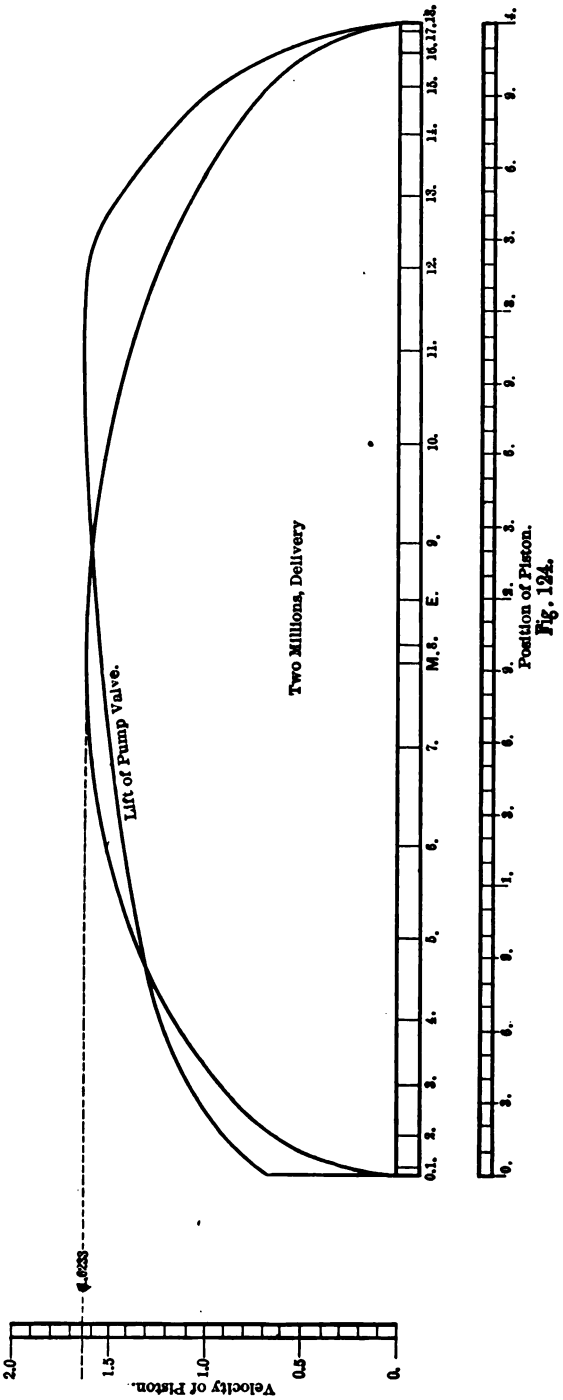
Two Millions, Delivery
Lift of Pump Valve.
Position of Piston.
Velocity of Piston.
M.S.
E.
0.1.
2.
3.
4.
5.
6.
7.
8.
9.
10.
11.
12.
13.
14.
15.
16.
17.
18.
0.
1.
2.
3.
4.
5.
6.
7.
8.
9.
10.
11.
12.
13.
14.
15.
16.
17.
18.
0.
0.5
1.0
1.5
2.0

Fig. 124.

It is not possible to know the exact diameters at which the discharge may be considered to take place, but I assumed it for the lower seat at 12 inches, and the upper at $9\frac{1}{8}$ inches.

Circumference of discharge at

12 inches diameter	=	37.70 inches		
$9\frac{1}{8}$ " "	=	28.27 "		
Total	=	65.97	=	5.50 ft.

Area of discharge of valve at

11 rev.	=	5.50 × .032	=	.1760	sq. ft.
13 "	=	5.50 × .039	=	.2145	"
18 "	=	5.50 × .047	=	.2585	"
Area of 17 inches plunger				1.576	"

Maximum velocity of plunger at

11 rev. = 4 × 2 × 11 × 1.57 ÷ 60 = 2.30 ft. per sec.
13 " = 4 × 2 × 13 × 1.57 ÷ 60 = 2.72 " "
18 " = 4 × 2 × 18 × 1.57 ÷ 60 = 3.77 " "

Displacement of plunger at

11 rev.	=	1.576 × 2.30	=	3.6248	c. ft. per sec.
13 "	=	1.576 × 2.72	=	4.2867	" "
18 "	=	1.576 × 3.77	=	5.9415	" "

Velocity through valve at

11 rev.	=	3.6248 ÷ .1760	=	20.60	ft. per sec.
13 "	=	4.2867 ÷ .2175	=	20.00	" "
18 "	=	5.9415 ÷ .2585	=	23.00	" "
It was calculated to be				12.20	" "

Head due to velocity of 20.60 ft.	=	6.60 ft.	or	2.87 lbs.
" " " " " 20.00 "	=	6.20 "	"	2.70 "
" " " " " 23.00 "	=	8.20 "	"	3.57 "

Weight of valve per square inch of unbalanced area, 1.00 "

Ratio of weight of valve to pressure due to flow through the valve, about 1 to 3.

The diagrams, as well as experience, showed :

First, that the width of a valve seat could safely be brought to a

very narrow surface, probably much less than I made it ($\frac{1}{8}''$); for the pressure in this case was but 377 lbs. per square inch of surface.

Secondly, that the lift of a valve is exactly proportioned to the velocity of the plunger, if it is not too light so as to be brought to its stop before the maximum velocity of plunger is attained. The deviation from this theoretical curve, as shown in the cards, is attributable to the friction of the stem running to the indicator, and possibly somewhat to seat area, small as it is.

Thirdly, that in the form of valve shown, the theory that the velocity of the water through the valve is that due to the head corresponding to the weight of the valve per square inch of unbalanced area, did not prove to be very near the truth. I can conceive of but one reason for this great variation from the theory assumed, and that is, the effect of the horizontal issuing stream diminished the vertical pressure. I think it is not improbable that there is a mathematical demonstration for the resultant vertical force due to an issuing horizontal stream from a curved aperture, and express correctly the relation of lift to weight, but I have not attempted to thus solve that problem. I do not think that the friction of stem or force of spring is sufficient to account for the deviation.

The valves were symmetrical and round in form, and were afterwards turned down and reduced in weight to 35 lbs. in water, or .66 lbs. per square inch of inside unbalanced area, but I regret that I took no further diagrams. The narrow seats, and the quiet action, and the synchronous motion with the plunger, were the more important features in my mind at that time, and the question of weight of valve was left to experiment after all.

OTHER DOUBLE-BEAT PUMP VALVES.

The valves for the Cornish Pumping Engine at Providence, R. I., were made of substantially the same design as the one just described for the High Service Engine. The dimensions and form are shown in Fig. 125. Its seats were chamfered in the same manner to about one-eighth of inch in width, and the valves always worked well, although nothing is known of the pressure required to operate them. The valve weighed in water, per square inch of unbalanced inside area, 1.28 lbs.; outside area, 1.11 lbs.; and seat area about 12 per cent. of inside area. Water pressure 80 lbs. Pressure upon seats, 680 lbs. per square inch.

ST. LOUIS HIGH SERVICE PUMP VALVE.

I do not know who designed the valves for this engine, but I am in possession of a drawing of one, which is shown in Fig. 126. From the data given I find that its weight in water per square inch of

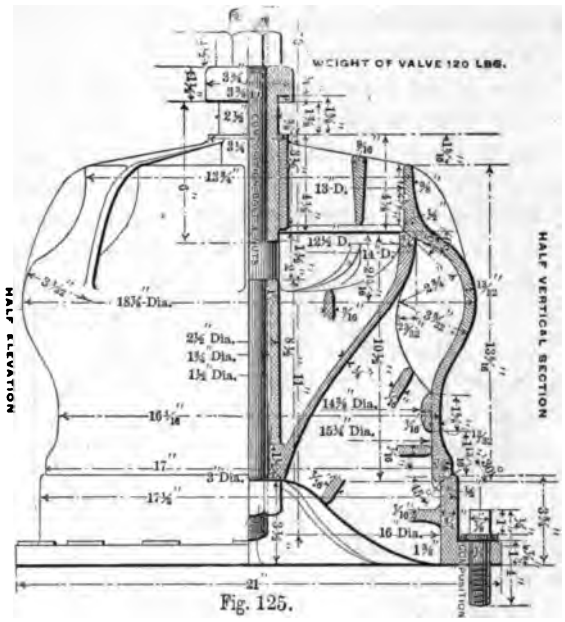

Fig. 125.

nside unbalanced area is 1.86 lbs.; and for outside unbalanced area s 1.12 lbs.

On the drawing is this indorsement:

"These valves are working under a pressure of 90 lbs. per square inch, seat with very little noise, and give perfect satisfaction at the St. Louis Water Works, November 27th, 1873."

Seat area is 67 per cent. of inside area, and pressure per square inch about 250 lbs.

MILWAUKEE WATER WORKS PUMP VALVE.

I am indebted to Mr. Edwin Reynolds, General Superintendent of the E. P. Allis & Co. works, and a member of this Society, for a full description and drawing of this valve. It is reproduced to scale in Fig. 127.

Its weight in water per square inch of inside unbalanced area is .40 lbs.; outside unbalanced area is .21 lbs.

Its seat area is 88 per cent. of inside area.

Water pressure 53 lbs.

Pressure per square inch on the seats, about 120 lbs., which is exceedingly light.

Plunger 21½ inches in diameter, 3 feet stroke, and maximum revolution 25 per minute, or 3.92 feet per second. There are ten valves for each end of the pump.

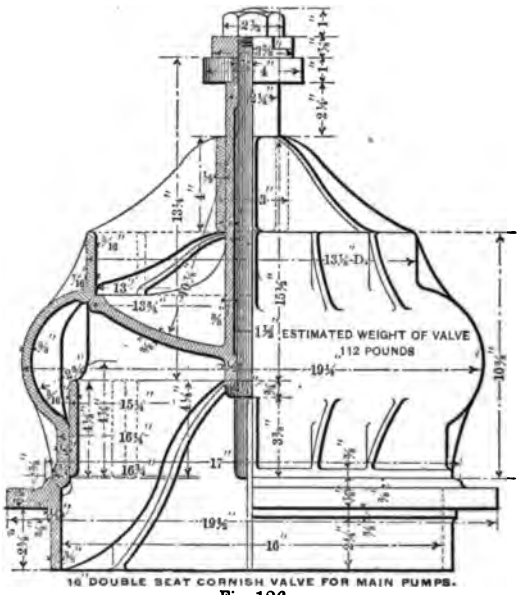

Fig. 126.

Maximum possible lift of valve . . .	$\frac{13}{16}''$.
Valve opening about	$\frac{11}{16}''$.

Proceeding in a similar manner as followed in calculating the relation of plunger velocity and flow of water through the valves in the case of the Providence High Service Engine, we find, upon the supposition that the valve reached its full possible lift, that the velocity through the valve was 5.68 feet per second, but what evidence is there that the valves reach this limit? Thanks to the indicator for dispelling this illusion. If it be assumed that the marks on the stop show that the valves reach it, I do not think that conclusive evidence; for, as already pointed out, a broad seat can have the effect of throwing the valve up to a very great height, and yet recede again as soon as open.

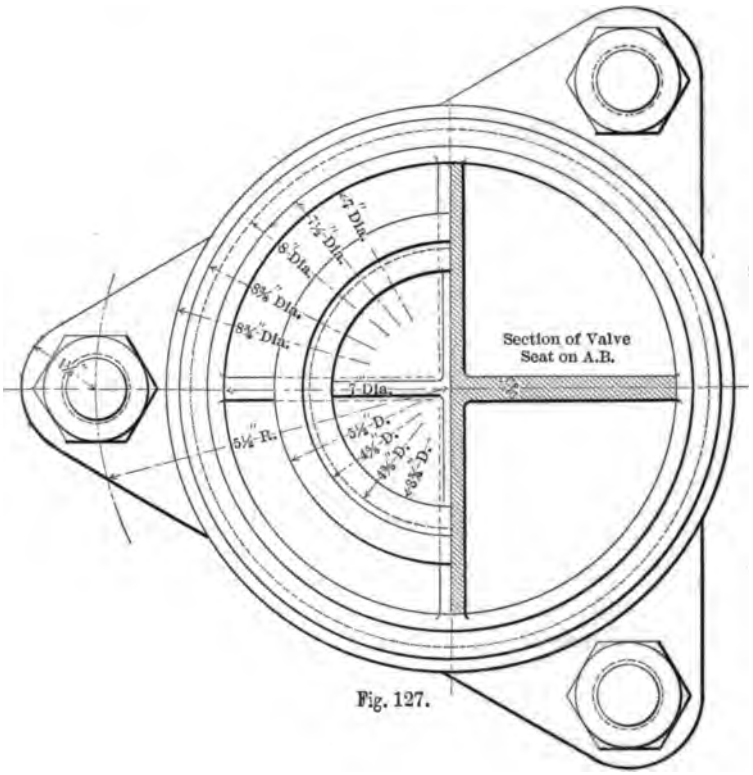

Fig. 127.

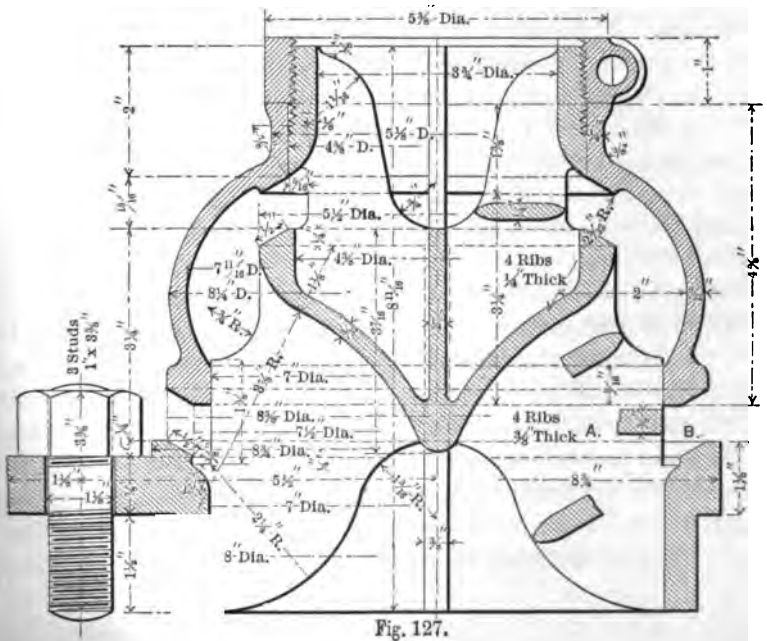

Fig. 127.

Mr. Reynolds writes me in explanation of the action of the valves as follows: "You will notice that the stop rings (Fig. 127) are screwed on, which allow the lift of the valve to be adjusted in order to make it work at its quietest point. At high speeds (say 200 feet per minute) the valves are somewhat noisy, but in a pump with valve area equal to 75 per cent. of plunger area, and at a speed of 100 to 125 feet per minute, the valves are practically noiseless."

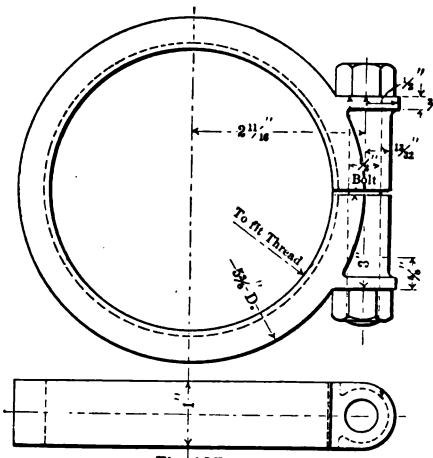

Fig. 127a.

Unless I had positive evidence to the contrary, such perhaps, as is only obtained by the aid of the indicator, I should doubt very much whether these valves ever lifted above one-half an inch. And the noise that begins to manifest itself at the higher speed I should attribute to the broad seats, as already explained to be possible.

With such broad seats there is the constant uncertainty in one's mind whether to refer the unbalanced area to the inside or outside diameters. If we take it at the inside diameters, and approximately take the pressure producing the velocity through the valve at three times its weight, as shown by the cards to be nearly the ratio, we find the velocity of the issuing stream to be about 13.2 feet per second, instead of 5.68 feet if wide open, and hence its lift only about three-eighths of an inch. If taken at the outside diameter we find the velocity to be about 9.67 feet per second, and its consequent lift about one-half inch.

Reflections.—These double-beat valves have been used as long as the Cornish Pumping Engine itself, and with more or less satisfaction. I presume it is possible to make them work very well under a great variety of conditions; but there is one feature in which they are necessarily defective, namely, the lift must always be quite large unless great power is sacrificed to reduce it. It is undeniable that a small lift is preferable to a great one, and hence it naturally leads to the substitution of numerous small valves for one or several large ones. To what extreme reduction of size this view might safely

, must be left to the judgment of the engineer for the particular in hand, but certainly, theoretically, we must adopt small es. Mr. Corliss, at one time, carried the theory so far as to e them only 1⅝ inches in diameter, but from 3 to 4 inches is more common practice now. A small valve, it must be remem- d, presents proportionately a larger surface of discharge with same lift than a larger valve, so that whatever the total area of e-seat opening, its full contents can be discharged with less lift ugh numerous small valves than with one large one.

did not intend to speak of er valves in this paper, but study of the subject leads up t so naturally that I shall ll on it a moment. I think to Mr. Henry R. Worthing- belongs the honor of first g numerous small rubber es in preference to the larger l valves he found in general Since that time to this day, has not been done with ital organ of the machine? ems as if at times engineers ght that because they were ng large pumps, they must sarily make large valves, ence we find examples of s 3 and 4 ft. in diameter. ist be extremely gratifying e friends of Mr. Worthing- find that the latest practice e of our most successful

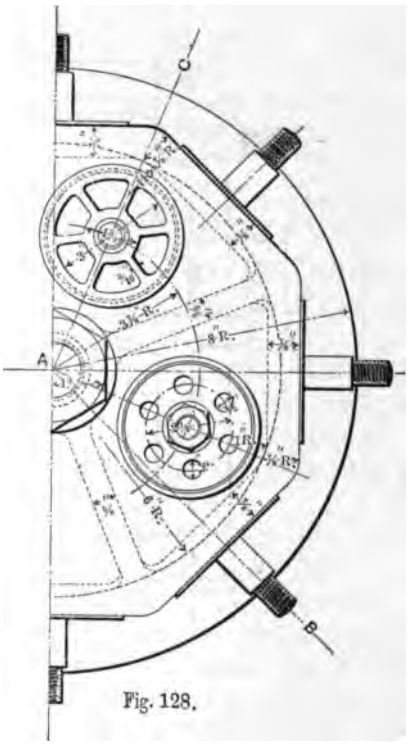

Fig. 128.

eers, Mr. Edwin Reynolds, is that of Mr. Worthington many ago, and that he is using now numerous small rubber valves most a standard pattern for all of his late pumping engines. indebted to Mr. Reynolds for a drawing of this valve, and it roduced in Fig. 128. You will observe that, in order to obtain num valve area in minimum space, a number of cages, or are erected, around which the small valves are placed.

s needless to say that these valves work well under all the tions of a city pumping engine. If, at first thought, the large

seat area would seem to be objectionable for the reason give: the case of a metal valve, I think we can find an explanation their better action in the fact that the softer material permits *gradual* application of the water pressure underneath the while with the metal valve it must necessarily be sudden. A vc spring is generally used to limit the rise of the valve, but an i cator diagram of its actual lift and rate of lift would be instruc

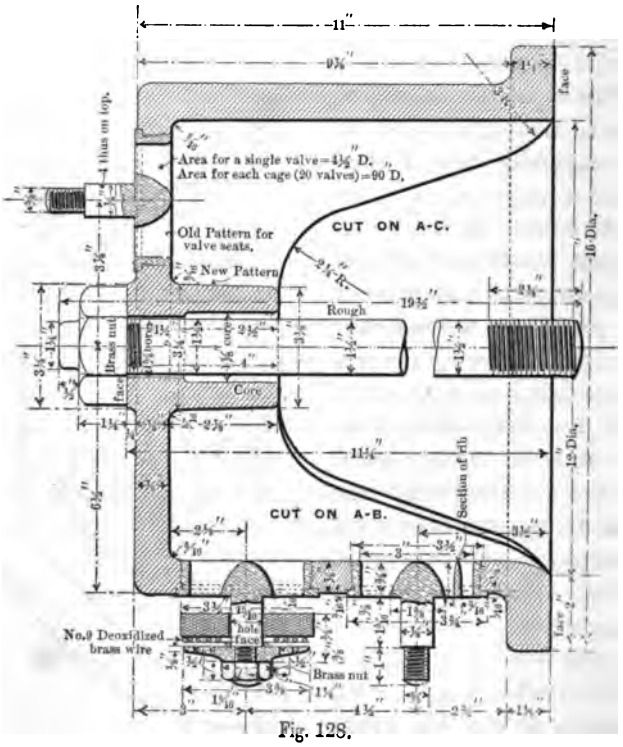

Fig. 128.

This could be obtained best from the suction valves, if the p were located in a well without any pipe connection, and in that no stuffing-box would interfere with the free lift of the valve.

CHICAGO WATER WORKS.

The report of the Chief Engineer for the year 1888 is at since the above was written, and it contains some valuable relating to pump valves of the double-beat pattern. It is less to repeat here in detail the data given, but the following culations are made therefrom: A 15-inch valve had a seat ar

85% of inside unbalanced area; and its weight per square inch of inside unbalanced area = 1.31 lbs.; its weight per square inch of outside unbalanced area = .71 lbs.

The above valve was of brass, and one of iron with wooden seats was substituted. Its seat area was 94% of inside unbalanced area, and its weight per square inch of inside unbalanced area = 1.16 lbs.; its weight per square inch of outside unbalanced area = .60 lbs.

A 25-inch valve had a seat area of 75% of inside unbalanced area, and its weight per square inch of inside unbalanced area = 1.41 lbs.; its weight per square inch of outside unbalanced area = .80 lbs.

An 8-inch valve had a seat area of 75% of inside unbalanced area, and its weight per square inch of inside unbalanced area = .96 lbs.; its weight per square inch of outside unbalanced area = .55 lbs.

Water pressure 65 lbs.

All these valves worked poorly and noisily. To improve their working, spiral springs were added to their already overburdened weight, and then follows the story of the large quantities of air pumped into the pump chambers in order to make the valves work well.

Page 189.—"To keep these valves from lifting too high, and to make them seat quickly, spiral springs are used. They work all right as long as they are new; but as soon as they lose their elasticity, or break, the valves cause an unnecessary thumping noise in the pumps, and a trembling of the floor."

Page 190.—"A few weeks ago one of these large center valves broke the spiral springs and stripped the nut off the bolt which holds the valves." Speaking of the 25-inch valve, the report says: "Thus it has .845 lbs. of weight per square inch of floating area (what I have termed the outside unbalanced area) to bring it down to its seat. To accelerate this the four spiral springs are required."

Of the 8-inch valve it says: "They have only .56 lbs. per square inch to seat them. These valves work noisily, as soon as the spiral springs are weakened or broken, which is immediately noticed in the working of the pump."

Page 219.—"One of the new engines stripped the nut from the bolt which holds the large double-beat suction valve in place."

It is difficult to distinguish between the noises in a pump caused by the *closing* of one valve, and the *opening* of the other. I have no reason for the noisy action of these valves other than has been pointed out in this paper, namely the *excessive seat area.* Spiral

springs served to soften the blow upon the nut, or stop, in the *rising* of the valve, and when they were broken by the violent concussion in *opening*, the nut was also soon broken.

I do not think the springs were needed to help *close* the valves—they were already excessively heavy. It is very doubtful in my mind whether these broad seats act at all in the nature of a "floating" surface. The real surface, or area, against which the water impinges to lift the valve, is on the inside, or between the seats, and to that area the weight of the valve should be referred. The outflowing current moves parallel with the seats, and hence has no vertical component acting to lift the valve.

We have already seen that the pressure due to the velocity of outflow is reduced to nearly one-third of its force in its vertical effect to lift the valve, by the oblique direction of the water passing through the valve; hence I do not think the seat surface, which is parallel to the flow, should be added to the lifting area.

The report proceeds, after speaking of the constant difficulties with these valves, to speak of the great improvement effected by substituting for them numerous small ($4\frac{1}{8}''$) rubber valves. These valves are substantially the same as the Reynolds pattern, illustrated in Fig. 128.

SUMMARY OF VALVE PROPORTIONS.

Location of Engine.	Diameter of valve in inches.	Weight in water per square inch of inside unbalanced area in lbs.	Ratio of seat area to inside unbalanced area.	Pressure upon seat per sq. inch in lbs.	Action.
Providence High Service Engine.....	12	1 lb. reduced to .66 lb.	16%	377 lbs.	Good
Providence Cornish Engine...	16	1.28	12%	680	Good
St. Louis Water Works.	16	1.86	67%	250	Some noise
Milwaukee " "	7	.40	88%	120	Some noise at high speed
Chicago " "	25	1.41	75%	151	Noisy
" " "	15	1.31	85%	140	"
" " " wood seats.....	15	1.16	94%	132	"
Chicago Water Works.	8	.96	75%	151	"

CCCXXXVI.

EXPANSION OF TIMBER DUE TO THE ABSORPTION OF WATER.

BY DE VOLSON WOOD, HOBOKEN, N. J.

(Member of the Society.)

HAVING had occasion to use the facts in regard to the expansion of timber in the direction of its fibers, and failing to find, after a limited search, definite figures, I prepared a specification for the Department of Tests in Stevens Institute, according to which the results in the following table were reported.

The specification directed that two specimens each of pine, oak, and chestnut, each about three feet long and six inches wide, should

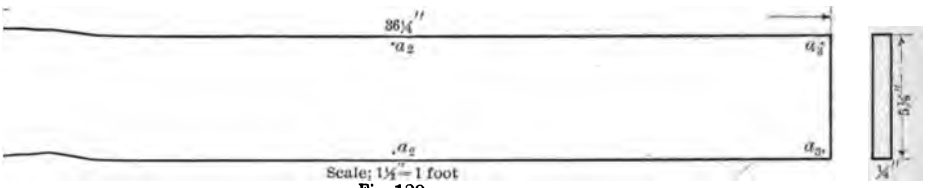

Fig. 129.

be selected, of good quality, fairly straight grained, free from knots and fairly seasoned. The specimens were then to be kept in a dry warm room for about three weeks. Eight brass pins were to be inserted, one near each of the four corners, two near the middle of the length and near the edges, and two near the middle of the width and near the ends. The arrangement of the pins and general dimensions of the specimens are shown in the annexed figure (Fig. 129), drawn $\frac{1}{8}$ of full size.

A very small mark was made on each pin with a center punch to facilitate accuracy of measurements. These were on one side only of the specimen, and the readings were to the nearest half-hundredth of an inch.

The report states that the specimens were, according to the specification, kept in the office for three weeks, when the initial measurements were made, after which they were immersed in water

June 7, 1888, and removed from the water July 14, having been in the water thirty-seven days, and the final measurements made on the latter date.

The record is as follows:

CLASS OF WOOD.	PINE.		OAK.		CHESTNUT.	
No. of the specimen	1	2	3	4	5	6
LONGITUDINAL MEASUREMENTS.						
Initial length *aa* inches	35.545	35.665	35.620	35.525	35.625	35.540
Final length *aa* inches	35.565	35.680	35.645	35.560	35.695	35.585
Elongation, inches	0.020	0.015	0.025	0.035	0.070	0.045
Per cent. of elongation	$\frac{2}{50}$	$\frac{12}{100}$	$\frac{7}{100}$	$\frac{1}{10}$	$\frac{1}{5}$	$\frac{18}{100}$
TRANSVERSE MEASUREMENTS.						
Initial a_1a_1 inches	4.500	4.470	4.485	4.480	4.505	4.480
Initial a_2a_2 inches	4.495	4.450	4.475	4.440	4.470	4.470
Initial a_3a_3 inches	4 460	4.450	4.485	4.420	4.485	4.475
Mean	**4.485**	**4.456**	**4.482**	**4.447**	**4.487**	**4.475**
Final a_1a_1 inches	4.620	4.580	4.635	4.625	4.695	4.635
Final a_2a_2 inches	4.615	4.555	4.645	4.570	4.635	4.615
Final a_3a_3 inches	4.580	4.570	4.685	4.560	4.660	4.685
Mean	**4.605**	**4.568**	**4.655**	**4.585**	**4.663**	**4.628**
Expansion inches	0.120	0.112	0.173	0.138	0.176	0.153
Per cent	2.7	2.5	3.9	3.1	3.9	3.4
$\frac{\text{Rate of expansion}}{\text{Rate of elongation}} =$	45	59	56	31	19	25
Mean	52		43½		22	

The mean per cents. of elongation were

	Pine.	Oak.	Chestnut.
Elongation %	0.06½	0.08½	0.16½
Of lateral expansion %	2.6	3.5	3.65

It will be seen that chestnut expanded more than the pine or oak both transversely and in the direction of the fiber; that the mean elongation of the chestnut was 2.6 times that of the pine, and the lateral expansion was 1.4 times as great as that of the pine.

DISCUSSION.

Mr. F. H. Ball.—I happen to have had a little experience, which I will explain; it may be of interest. In our pattern shop we had occasion to make an engine frame. The side of the engine frame was made by gluing up pine, piling the pieces on top of one another. The two sides were also made in that way, and then there was a flat piece put across. That part had to be

worked out into shape, and so far as we observed the grain of the wood was straight, and very much like the other wood. They were both pine. First let me say, the round end of the pattern was put on for convenience with a dove-tail, so that it lifted off from its end of the frame. We noticed very soon after we began to use the pattern that this last piece appeared to be shorter than the others. We did not suppose that between two different kinds of pine there would be any material difference in the shrinkage lengthwise, if there was any shrinkage in the length; but we noticed that that piece was shorter, and kept getting shorter. I won't say exactly what the difference is; but my impression, just from looking at it, was that this piece was an eighth of an inch shorter than the other, or else the other parts were an eighth of an inch longer. So finally we had to take this piece off and put on another. We did not notice any appreciable shrinkage in other directions. This piece I do not think was over three feet long, and it was screwed to the rest of the frame. The rest beyond it was glued on. There was no opening of the joint, but the joint was perfect. We thought of course this piece shrunk. Our pattern-makers were slow to believe that pine would shrink nearly one-eighth of an inch in 36 inches.

Prof. Denton.—I would like to ask Prof. Wood what his experiments show—whether it is possible for a piece to have shrunk three-eighths of an inch by the experiments.

Prof. Wood.—By no means. The pieces that we experimented with were longer, almost double the length of the others, and the measured elongation was two one-hundredths of an inch.

Prof. Denton.—That is the direction of the grain.

Prof. Wood.—The direction of the grain.

Mr. Ball.—I do not want to be put on record as saying that our shrinkage was an eighth of an inch, but it was a very appreciable amount. Our pattern-makers called it one-eighth of an inch without measuring it. I know it was a good deal more than one-sixteenth of an inch.

Mr. H. R. Towne.—It is pertinent to remember in this connection that strips of wood are commonly used to form a hygrometer, and I believe afford the best method of constructing an instrument of that kind for measuring the humidity of the atmosphere. They are usually made, I believe, of two strips of wood of different kinds glued together, the action of it depending on the absorption of moisture by the two pieces.

CCCXXXVII.

STANDARDS.

BY JAMES W. SEE, HAMILTON, OHIO.
(Member of the Society.)

THE watch-maker of old was really a watch-maker, because he made a watch. He made the works, and every part of the works. He made the case, and every part of the case. He made the watch as a thing by itself without regard to any other watch which he might have made in the past, or might be making at present, or might make in the future, and, above all, without regard to any watch which any one else might make. His work was well done, or at least we of to-day must say so.

There were lots of screws in this old watch. Each screw was made by itself, and fitted to its hole, and marked to correspond with that hole, and damage would be done if attempt would be made to put the wrong screw in the wrong hole. These remarks refer to those screws which were substantially alike; screws which differed from each other did so for no particular reason except the lack of apparent necessity for making them uniform. The same analysis would apply to any of those small details of the watch which might be found substantially in duplicate or triplicate.

When the old watch-maker made his next watch it also stood upon its own bottom. It was as good as the first one, and probably a trifle better, or perhaps worse. It was bound to be different for the simple reason that in those times no thought had been given to processes for duplicating good things.

As the watch-maker gave no thought to making all of the similar screws of one watch uniform, it can readily be understood that he was farther yet from any attempt to make the screws of all his watches uniform. The truth is, the old watch-maker had no real good way of making screws. His ways were what we would now call bad ways, and his screws were what we would now call bad screws. The methods of to-day are capable, when set into action, of making good, bad, or indifferent screws, as desired, but they are capable of securing uniformity in the product. When the methods

are adjusted to produce good screws, the production of a bad screw, that is to say, a different screw, introduces added difficulty and expense.

One may well imagine that the old watch-maker had a reputation, and that this reputation was based, say, on the perfection of the *details* of his watches. We may even assume that his reputation was based on the perfection of the screws in his watches. This meant simply that while his screws were good, or we will say bad, the screws of other watch-makers were worse. Under such circumstances we would not necessarily call this old watch-maker a good manufacturer, or a good watch-maker. We should call him simply a good screw-maker. To-day, looking at him as a mere screw-maker, we would criticise his screws because they would not interchange with each other in a given lot of apparently uniform watches, or even in one watch. This criticism would then have been met by the statement that no difficulty could arise in view of the fact that each screw was marked to correspond with its hole. Our ancient watch-maker, discussing the matter to-day, would probably say: Your modern screws are no better than my screws were; they are simply cheaper. You have schemed up all manner of devices for making them, and now you produce a thousand screws as good as the best of mine, and costing not more, perhaps, than one of mine. The fault in his argument becomes apparent when he uses the word "best." Of the seven screws in one of his watches, one was the best of the lot, and as all were different, six screws were therefore not the best. He would, therefore, be compelled to acknowledge that the modern thousand screws are good, and uniform, and therefore uniformly good, and the conclusion must follow that uniformity applied to goodness is itself an element of goodness.

There was another quality in the old watch, reflected from the old watch-maker. A given screw, without any idea of adding to its merits, was designed especially to differ from any other screw that had been produced by man, or by any other man rather. The same was true with other unimportant details of the watch. The idea was that the repairs to this one watch should bring grist to the mill of its maker, and not to any one else's mill. This selfish feature of trade was really a matter of pride and effort with the old watch-maker. The fallacy of this business theory has now been exploded, and the watch-maker of to-day understands that, other things being equal, he whose watch is the most readily repaired, has a

distinct advantage in sales. He would seek by all means possible to avoid the use of a screw which could not be produced by stranger called on to repair the watch. Should he discover that twenty of his fellow-manufacturers were making watches requiring a particular screw, and that they were supplying such screws for repair purposes to watch-repairers generally, he would quickly modify his own watch so that the repairer could use these screws.

Carrying this idea far enough it will be apparent that many watch manufacturers will be making the same kind of screws, and many watch-repairers buying such screws. We shall further see some enterprising screw-maker setting up in business for himself, and making these screws for supplying the entire demand. Here we have the first sub-division of manufacture. The sub-division must be based upon two facts, viz.: First, that there is a large demand, from several different sources, for identically the same screw; and, second, that a screw-maker can make all these screws better and cheaper than his several patrons could in small lots. The first fact finds many illustrations in the arts to-day, and grows out of the recognition of the new business principle which the old watch-maker combated. The second fact is a firmly established one. There are two further facts growing out of the new system. One is the fact that the watch-maker's product is none the worse because some of the details employed are identical with the excellent details found in the product of a competing manufacturer. The other is the fact that the modern watches are easily and properly repaired.

The idea that it was good business policy to make things that nobody else could fix has not been so very long abandoned. Twenty years ago certain locomotive builders employed in their construction an odd size for bolts, and an odd threading which made, and was intended to make, a great deal of trouble in the repair shops. No locomotive builder of to-day could live under such a system.

Modern industry, especially in metal-working, is based largely upon specialties. A manufacturer's specialty may lie in the fabrication of a certain detail of an aggregated product; or it may lie in the fabrication of a certain detail of a detail; or it may lie in the aggregation of various details produced by others, his operation being confined to the work of assembling the details, and the fabrication of certain elements of conjunction. We can readily imagine the ancient watch-maker producing every wheel and

pinion, and plate, and case, and hand, and main spring, and hair spring, and dial, and crystal of the watch which he would present as of his own manufacture. The material which he operated upon consisted of sheet metal, wire, glass, and the raw material of porcelain manufacture. The watch-maker of to-day makes few of these things, and sometimes none. We have the makers of watch cases, who may or may not make all of the parts constituting the case. The maker of movements may make every part constituting a movement, but more than likely he buys his mainsprings from a special manufacturer, hair springs from another manufacturer, pinions from another, screws from another, hands from another, and dials from another. Probably the party who supplies the dials merely configures the dials purchased from the manufacturer, who, in his turn, procured the back-plates from still another party.

In this way almost all our modern industries are sub-divided into separate industries mutually dependent on each other for demand and supply. It seems the policy of the American manufacturer not to bother with a detail which he can procure of a satisfactory quality, at a cost less than that of its production in his own establishment; and it seems also the policy of the American sub-manufacturer to devote himself to such an extended manufacture of a given detail, that he can make it to the interest of the dominant manufacturers to let the manufacture of his specialty alone. It will be readily understood that a single detail of the product, receiving the entire attention, and thought, and application, and capital of the manufacturer concerned, will be more cheaply produced, and of higher quality than if the same detail was treated as a mere element in the factory engaged in the fabrication of a vast combination of elements.

The effect of the modern system of sub-division of product-details has been to demand that there should be a uniformity of details, that is, an interchangeability among the individuals of the same class. To secure a reliable uniformity of excellence in the general character of the purchased details of mechanical structures, constitutes one of the continued strains upon the manufacturer, and it may be said as a general fact that standards of uniformity have been most thoroughly established in those branches of trades in which the fewest numbers of parties are interested.

The manufacturer of gas-fixtures is seldom the manufacturer of gas-burners, but his fixtures must receive the burners of the market; and the burners of the market must, obviously, be so made as to fit

the fixtures obviously intended to receive them. From this necessity springs a standard gas-burner thread, acknowledged alike by makers of fixtures, and makers of burners. This standard embodies an unwritten law accepted by the very few who are interested; law which would soon be violated and abrogated by the multitude working in ignorance or out of fellowship. *The law is not of record.*

It does not follow that, because the burner-makers and the fixture makers have settled on a standard size and thread, that size is the best that can be chosen. It is however certainly better that these things should be uniform, than that a few should be better and many worse, and all different. Uniformity in such case is of itself a superior merit. The mere selection of a standard is evidence that it possesses some inherent merit. The establishment of a standard does not prevent the later substitution of a better one. It is safe to assert that it is far easier to revolutionize a standard for betterment than it is to establish a standard in the first place. The difficulty in establishing a standard is generally due to differences in opinion as to what is the best, though often the matter is deferred in the hope of possibly reaching an impossible ideal. It would appear to be a much better policy to adopt something fairly satisfactory at once. Effort toward betterment would then be concentrated, and might result in something worthy of eventually being substituted for that which has been adopted.

A few years ago there was no established height for the coupling of cars. Each railroad was a law unto itself. Thirty-three inches from rail-top to draw-bar center was finally settled on for a standard. While it is being determined whether this is two or three inches too high, or three or four inches too low, we can possess the boon of uniformity.

It is certainly within the memory of many of the members when wrought-iron pipe was made of hap-hazard size by different makers, there being no uniformity of size among the different makers, or among the products from the same maker. I remember, in 1865, putting new pipes into a feed-water heater. The old pipes were what was called seven-eighths pipe, something now no longer made. There were four of these pipes in the heater, connecting with unions, etc. None of the threads were of the same size, but each pipe-end had been fitted and marked to its individual hole.

The whole gas pipe business was an unmitigated nuisance on account of the lack of system, and the necessities of the case were recognized by the limited number of manufacturers interested, and

at the present day there is a standard size for each pipe. The sizes, as to diameter of pipe, diameter of threaded part, number of threads per inch, and taper of the threaded portion, are purely arbitrary, and present to us criterions of absolute perfection when memory goes back to the pipe of old. What is called a $\frac{1}{8}$ inch gas pipe has about a $\frac{1}{4}$ inch hole in it, but it always has such a hole, and we know it. The result of the standard system adopted in the manufacture of pipe is that a pipe made in Philadelphia, another piece made in Chicago, a coupling made in New York, a valve socket made in Dayton, and a tap made in Hartford, will all represent identically the same understanding of intended sizes.

The law is not of record, and it is maintained simply by one manufacturer following as closely as possible in the footsteps of his most respected predecessor. Trouble may be anticipated in the future, as the foot-steps lose their sharpness of impression. A system is to be proposed in this paper by which the pipe standards, and suchlike, may have an indisputable record as they should have had years ago.

Before going into any description of the method proposed for the record of standards, it is thought well to point out a few examples in the productive arts in which the desirability of establishing standards will be most apparent.

The subject-matter for the application of standards may be divided into several classes: First—Articles which, by reason of their associating or intermembering with each other, must needs be constructed each in contemplation of its fellow-piece, and which, having no association in the process of manufacture, must needs be constructed with reference to an understanding applicable to both the intermembering parts. Second, articles of purchase which are designated by grade, and in which the grade designation should be free from all doubt and ambiguity so as to permit two distant parties to speak understandingly of the same grade. This question of grade may be again subdivided into dimensions and consistency. Third, rules of action, by means of which a course of procedure in contemplation may be a matter of mutual understanding. This represents a general classification only, and is capable both of extension and subdivision.

PROPER SUBJECTS FOR STANDARDS.

Steam c l Gas P .—] is a ndard covering all of the followed with

commendable fidelity by the manufacturers of the pipe, its fitting, and its tools. There is no authoritative establishment of the standard employed, and a manufacturer newly engaging in a line involving a knowledge of the standard adopted, could only govern himself by close observation of what he found in the market. He might thus unwittingly copy a copy, itself incorrectly copied from an incorrect copy. Until this Society interested itself in the matter, there was no fountain head to which he could trace the standard.

Cast-Iron Water and Gas Pipe.—This kind of pipe does not involve the accuracy requisite in the cut surfaces of the wrought-iron pipe, but there must exist a relationship between all such pipe brought into association, and also between such pipe and the valves, fittings, etc., employed in connection with it. The fabrication of such pipe is confined to very few manufacturers, and there seems to be something of an associated effort in the way of uniformity of sizes. Still there is nothing definite regarding it, and all operation involving such pipe must be defined by specifications furnished. It is very desirable that there should be an established standard relating to the strength of such pipe, and to the dimension of spigot-ends and bells, both for the pipe and for the fittings, etc., intended for use with it.

Brass Tubing.—Brass tubing is thin and will not follow at all, and cannot be made to follow, the nominal sizes commercially applied to iron pipe. There is an absolute lack of any system in the manufacture of brass tubing, except in the matter of one or two sizes which have been worked extensively into the gas fixture trade, which sizes have gradually fallen into established standards as to size, thickness, threads, etc. Aside from the sizes referred to there is no established thread for brass tubing. There is no accepted nomenclature for brass tubing.

There is no knowing what are the common sizes of the market, and there is no knowing whether the special size desired can be furnished or not.

Boiler Tubes.—Here we have another kind of pipe, made of wrought iron, and marketed in conformity with a fairly recognized standard of sizes, the characteristic of the system being that the size specified has reference to the outside of the pipe instead of its bore.

Lead Pipe.—There is no uniform standard of sizes recognized in connection with such pipe. It is generally specified by diameter of bore and weight per foot.

Hose.—There is no standard recognized, the only intelligible specification being the diameter of the bore, and there are no definitely established market sizes.

Glass Tubing.—There is no recognized standard and no established market sizes. Such tubes are often used in connection with metal fittings.

Gas-Burners.—There is an accepted standard covering diameter, and thread of socket, the standard being followed with commendable closeness by all gas-burner makers, gas-fixture makers, and tap makers. The standard is not of record.

Hose Couplings.—There is no established standard of size or thread, and, furthermore, there is no commercial tendency toward one. There is small chance of two sections of hose intercoupling unless they were made to go together. In the operations of fire departments it is often found that the helping hand from a neighboring town, called in view of impending disaster, is useless by reason of lack of uniformity in hose couplings. The lack of system in hose coupling makes itself felt in operations with fire engines, fire plugs, and all manner of hose attachments. The matter is so important that it is bound to receive some decisive action shortly.

Circular Saws and their Arbors.—Small circular saws fit upon their arbors, and are driven by the friction of clamping collars. There is no standard recognized in sizing the holes of such saws, which defect is daily felt by saw-makers, makers of wood-working machinery, and, above all, by the users of the saws. A standard is desired by all. In the larger saws, used in saw-mills, the friction of the collars cannot be depended upon for the driving, and consequently dowel-pins are fitted in the collars, and arranged to engage dowel-holes in the saw. The diameter of the arbor-holes, in these large saws, the diameter of the dowel-holes and their spacing, are arranged in recognition of an accepted standard. The standard is not of record.

Bolt Threads.—The necessity for a standard in the thread of bolts and screws has been so pressing that the adoption of one of the proposed standard systems is forcing itself upon the trades interested. It seems simply a question of step-by-step adoption.

Machine Screws.—No attempt at uniformity of threads, or even of sizes.

Bolt Heads and Nuts.—A lame standard of sizes.

Gauge of Railroads.—There is no standard of record, but the

necessities of transportation have brought about an accepted standard expressed as four feet eight and one-half inches. There is no record of it. It is understood by some to be expressed literally, and by others to be of a somewhat arbitrary character. A discussion of the question would show at least one-quarter of an inch difference in opinions. Statutes of some of the States touch upon the subject, and probably, by reason of there being more than one State, thereby make the matter worse.

Street-Car Gauge.—No established standard.

Gauge of Common Vehicles.—No established standard, though it is very desirable with reference to street-car tracks, etc.

Shanks of Oil Cups, Cocks, etc.—A few years ago such brass work as this was found upon the market with the shanks blank, with, once in a while, an exception in the way of a cut thread, which was all the worse because it would not conform with any tap ever thought of. The tendency of the trade now is to provide all such shanks with threads of some pipe size, but there is no uniformity of action among the different makers.

Nails.—A system of sizes fairly adhered to, but not of record.

Wrench Squares for Water Cocks.—There is no established system of sizes, and, in the case of water-cocks located in pipe systems below the ground, it becomes impossible to know what manner of wrench is required in operating the cocks.

Lamp Tops.—There is a commercial standard, and, by reason of the small number engaged in the manufacture, the sizes are adhered to with commendable fidelity. There is a standard of diameter and pitch for the threads, but as the standard is not of record the size must be groped at. Same is true of lamp wicks.

Elevator Buckets for Flour Mills.—No established proportion to aid in determining the size of spouting.

Shoes and Lasts.—Lengths are governed by a system of numerically expressed sizes based on barleycorn measurements. Widths are expressed alphabetically, but there is no established uniformity, and the letters are thus without useful meaning.

Gloves.—An established system, woeful in its ambiguity, by reason of its lack of record, and an excellent illustration of the lack of record. Gloves are commonly supposed, by the trade, to be graded in size by knuckle girth, in inches. The dealer, acting upon such belief, measures the customer's hand with a common measuring tape, or with a more convenient tape known as a glove measure. If the hand measures 7 inches, he provides the customer

with a glove marked 7, and thinks he has done his duty. The mistake of this procedure lies in the fact that 7 of the glove-scale does not mean 7 inches; a fact which many glove-makers and dealers seem to be entirely ignorant of. The glove measure is not the same as a common inch measure, but is considerably longer in each number. It seems that the glove measure is graded by some French system of arbitrary sizes; size 5 being $5\frac{1}{4}$ inches, and size 10 being $10\frac{3}{4}$ inches, each size being about $1\frac{1}{10}$ inches advance on its predecessors.

Hats and Caps.—These are commercially graded by a system of size numbers, popularly supposed to indicate a diameter due to the circumference of the head. The supposition is hardly correct, and the measuring appliances in common use do not seem to be based upon a uniform system of graduation.

Stove Legs.—It cannot be said of the stove maker that he even has a law of his own, as he never seems to have established a uniform system of leg dovetails among the different stoves of his own production. There is no variation material to the design of the leg attachment, but there is every difference material to the interchange of legs.

Dental Tools and their Sockets.—No standard of sizes. There is every reason why there should be one, except perhaps the lack of record facility.

Braces and Bits.—No system of interchange. Custom leaves the shanks of bits to be filed to form by the carpenter incapable of doing it.

Gun Calibres.—A sort of an established range of sizes, due originally to the fact that government had a finger in the pie.

Watch Cases.—A tendency toward a system capable of intelligent definition, but totally without record.

Watch and Clock Springs.—A defective system without a record.

Watch and Clock Hands.—An attempt at system without a record, resulting in confusion rather than simplification.

Roller Skate Wheels.—No standard of uniformity, there being just variation enough among different makers to upset system.

Gun Nipples.—A standard but no record.

Drill Shanks.—Confusion of "private standards."

Tool Sockets, Tool Eyes, and their Handles Generally.—An intelligent desire for a system of standards, hopeless in the absence of places of record.

Machine Tool Posts.—

Bolting Slots for Machine Tools.—Ditto.

Noses of Lathe Spindles.—Ditto.

Matches and Match Boxes.—No established length of matches. Match boxes on the market to-day will not receive the matches of yesterday.

Vent-holes and Primers for Ordnance.—A thorough-going individual (U. S.), having much to do with this matter, early adopted a standard. The standard is not of an authoritative record, and occupies precisely the same position as any standard of uniformity installed in an establishment owned by an individual.

Sections of Rolled Iron.—No uniformity in shapes substantially alike, and no community of dimension of iron from different mills. Established standards of common shapes are much needed.

Hinges.—No established system of sizes or of arrangement of screw-holes. An old hinge cannot be replaced by a new one without a special fitting and damaging mutilation of wood-work.

Locks.—About the same condition of things, while there is absolutely nothing, save a lack of facilities for establishing commercial standards, to prevent common lines of door locks, of different makers, thoroughly interchanging with each other so far as their attachment to doors, etc., is concerned.

Chain Pumps.—No standard for bore of tube or size of buckets.

Hub Bands.—Their manufacture is now never associated with the manufacture of hubs, but still there is no standard list of sizes to which the hub-maker and band-maker conform.

Mantels and Grates.—Total lack of system in arranging sizes. A new grate, in order to fit a mantel, must be made especially for its position.

Oil Well Tools.—Joints of these tools should conform to some established standard of sizes, but there is no standard size.

Planes and Bits.—No system of sizes in the construction of bits and throats.

Printers' Chases.—No system of sizes.

Height of Car Platforms.—Standard recognized.

Car Brake Shoe.—Tendency toward standard.

Car Bumpers.—Ditto.

Car Axles.—Recognized standard.

Essential Dimension of Railway Axle Boxes.—Ditto.

Photographic Cards, Albums, etc.—A vague system without record. Cards and albums were inaugurated at the same time, and

with a common understanding as to size. The lack of record is resulting in considerable confusion at present. Some card sizes have been lost and cannot be re-established, and other sizes have been established, to be lost, in turn, in the future.

Photograph Cameras.—It is desirable among photographers to use one or more tubes interchangeably in a number of cameras, but no system of interchangeability in the nose threads of the tubes and sockets of the cameras has ever been arrived at.

Stereoscopic Pictures and their Holders.—Ditto.

Eyelets and Eyelet Tools.—A standard of size but no record.

Electric Light Carbons and their Holders.—No standard, and every premonition of trouble in the future.

Electrical Battery Jars and their Containing Boxes.—No standard of dimensions, and trouble already developing in the telephone service.

Envelopes.—There is no system in the arrangement of proportion or sizes.

Thimble Skeins for Wagons.—No attempt at system.

Carriage Clips.—No standard.

Door Knobs and Spindles.—A sort of common following, with just sufficient recognition to result in exasperation.

Air Brake Couplings.—Private standard.

Doors and Door-Frames.—These are now market articles, emanating from different factories. There is no established system of sizes.

Sash, Shutters, Window-Frames.—Ditto.

Telegraph Insulators and Shanks.—A young trade with a practical standard having no record, and requiring only a reasonable length of time to lose the full benefit of the standard adopted.

Letterpresses.—No system of sizes.

Picture-Frames.—There is in the market a line of what are called "ordinary sizes," and pictures and glass are also marketed in a line of "ordinary sizes." The line of ordinary sizes started out with something of an understanding, on the part of the trade, by reason of the number of sizes being limited, but as the list was added to, the original understanding was lost sight of, and all is now in confusion.

Spectacles.—There is no standard of size, either as to complete spectacles, or to the fitting of glass and rims.

Clothing Sizes.—A sort of an attempt at something interchangeable, but individual attempts are not based upon a common understanding.

Stove Pipe.—No standard ever adopted which will enable p[illegible] sections to interchange. The standing joke.

Wood Sections.—Under the specialty system of manufact[illegible] there have been installed lines of trade, in common mouldi[illegible] flooring, battens, styling, etc. The common sections of the mar[illegible] compare with each other only in a very general way, while, w[illegible] facilities for recording standards, there would be readily adopted series of accurately defined sections for the guidance of bit-makers an users, which would enable these wood sections to interchange readily.

Pinion Wire.—No standard.

Shanks for Sewing Machine Needles.—No standards.

Panes of Glass.—"Ordinary sizes" not based on any common understanding.

Barrels, Kegs, etc.—No standards of dimension.

Washers.—No standards.

Brick.—A reckless standard varying 1-4 inch in neighboring yards, and varying an inch in different localities.

Type.—A standard of height without record. Standards of body and face without record.

The same lack of system applies to spigots, bungs, furniture casters, pens and holders, theatre scenery, bill boards, bottles and corks, candles and candlesticks, beds, etc., etc.

There is, for instance, no established custom regarding the shanks of furniture casters, though there is a lame tendency in that direction. Nothing being of record, progress is slow, and without hope of any ultimate system. It is desirable that new casters fit in old places.

There never seems to have been any community of thought between the candlestick-maker and the chandler. Candles will go into candlesticks, but have never been known to fit.

The theatre is, nowadays, a travelling institution, and much trouble is met with in adapting scenery to the various theatre stages. Some system of depth, etc., for scene grooves is desirable. The show-bill of the travelling theatre is of metropolitan print, and is combined by "sheet" or by "stand." The bill-boards of the universe must receive them arranged in the order contemplated. There is a hazy sort of a system apparent about the sizes covering bills and boards. There is no uniformity in sizes of beds, and everything is at sixes and sevens regarding bedsteads, mattresses, blankets, quilts, and sheets. The mattress of one room should certainly fit at least one other bedstead.

And the list might be almost indefinitely extended.

A mutual understanding regarding the dimensions of the articles previously referred to is desirable in order that there may be an interchange and common fitting. In such matters the demand for standards is most pressing. We now come upon a line of articles, common in the market, emanating from different manufacturers, used by all the people. Much of the purchasing of the day is done by correspondence, instead of by inspection, and it is desirable that a purchaser, whether consumer or trader, should know something of the size which the market offers, as well as something of the manner in which the sizes are to be specified. In dry goods, for instance, about every variety of fabric is manufactured in some peculiar width or some peculiar variety of widths. There is no uniformity in the matter.

Prices of such goods are invariably rated by the yard, but the price per yard gives no idea of the cost of quantity. Dry goods have their widths specified in yards, quarters, inches and lines. In some cases we find an arbitrary system of numbering. In other cases we find a list of specific names without meaning, such for instance as "full width," "extra," "double," etc.

Furthermore, there is no uniformity in the arrangement of quantity in package, bolt, etc. Again, many fabrics are woven into complete square articles, of common demand, but the sizes are not based upon any adopted system. What can be said of dry goods can be said of metal goods in the sheet, and also of an immense number of marketed articles whose dimension-grade is not intelligently specified. The following notes will convey some idea of the condition of this matter.

Flannel.—Widths not based on any system, and liable to be specified as "seven-eighths," which, on inquiry, may turn out to be 29 inches wide, and again as "4 - 4" which is evidently intended to mean four quarters of a yard, but which turns out to be about 35 inches.

Sheeting.—Width liable to be specified as "9 - 8," "5 - 4," "11 - 4," etc., which is suggestive of eighths and quarters of yards, but which is liable to be found misleading.

Cotton Wadding.—Will be quoted "per sheet," which means nothing.

Perforated Card Boar .—Dit

Ribbons.—Ribbon ths it of
ity. The market fi

of numbers, understood by nobody; again, by a set of numbers indicative of the number of lines. (Twelve lines make an inch.)

There are a great variety of arbitrary ribbon scales; one for this manufacturer and one for that one, one French and one English, one for silk ribbon and one for velvet. Where different dealers specify the same ribbon gauge, there is no correspondence of the ribbon widths. The condition of ribbon grading in the market to-day is such that if a number seven ribbon is ordered, it is liable to come having a width of one and three-eighths inches, one and one-half inches, one and one-fourth inches, and, possibly, you will be asked if you want a ribbon seven inches wide.

Buttons.—Are graded in size by a button scale, and the variety of button scales is well calculated to satisfy the most critical.

Pins.—Pins have their length specified by an arbitrary system of symbols. Such as "D C," "B C," "F 3½," "D B," "S W." These symbols mean double corkey, big corkey, short corkey, and so on.

Manufacturers and dealers have no mutual understanding of the system employed. The system is not used alike by any two makers. In addition to the lengths, pins are specified in classes, as "Class A," which refers to brass pins of the largest size, stuck in papers in twelve rows, thirty pins to the row, and 360 pins to the paper, etc. There is no uniform understanding of the system, but all use it.

Needles.—Needles come by number and class. No standard. No uniformity.

Thimbles.—Graded by sizes. No standard.

Music Strings.—Graded by tone letters with no standard.

Shoe-Pegs.—Graded by numbers. No standard.

Bags and Sacks.—Chaos.

Braid, Ruffling, Puffing, Binding, Banding, Tape, etc.—Graded in a hap-hazard manner, sometimes in inches, sometimes by arbitrary scale of unknown value, and sometimes by some one of the various ribbon scales.

Napkins.—An elegant system of grading the sizes. We quote from the catalogue of a metropolitan dealer: "5–8" or 18 to 20 inches according to quality, "3–4" or 24 to 28 inches according to quality.

Worsteds.—Size is specified as "double" or "eight-fold" or "single or four-fold," and a pound of worsted means eight ounces. It is put up in hanks of indefinite quantity.

Thread.—S[illegible] by numbers, and no fixed standard of uniformity. No standard of quantity for spool or package.

Hooks and Eyes.—Size graded by a meaningless set of numbers.

Table Covers.—No uniform system of sizes manufactured. Sizes specified as 4–4, etc., indicating quarter yards.

Card-Cloth.—No established system of grading quality, characteristic, or width.

Umbrellas.—Size specified by inches, with no common understanding regarding the points of measure.

Paint Brushes.—Some graded in inches of width or diameter, and others by meaningless system of arbitrary numbers.

Tin Plate.—No uniform standard for specifying quality or characteristic, and no uniform system of manufactured sizes.

Wire Cloth.—No system of widths. No established term to specify characteristics. Quality specified by number of wires per inch coupled with the wire size referred to ambiguous wire gauges.

Bolting Cloth.—No system of widths. Character specified in some cases by threads per inch, in others by spaces per inch, in others by varying system of arbitrary numbers.

Rivets.—Size sometimes specified in diameter by ambiguous wire gauge, again in fractions of an inch, and again by the number of rivets it will take to make a pound.

Rubber Bands.—System of numbers not mutually understood among the manufacturers and dealers.

Shawls.—No system of sizes.

Chain.—No system of sizes, and no brief method of specifying.

Collars and Cuffs.—Inch definition, but no established limit of departure. Often three-eighths of an inch variation.

Rope.—No real system.

Wire Rope.—Ditto.

Files.—Confused system.

Handkerchiefs.—No system of sizes.

Cigars.—Big cigars and little cigars, and boxes made to fit.

Wire.—Wire sizes are generally expressed by numbers based upon arbitrary scales. The subject may be dismissed by stating that there are no less than eight different wire gauges in use, no two of which correspond. The consequence is that the mere specification of a size number is absolutely meaningless.

Books.—A total lack of system regarding sizes. Such terms as "Quarto," "Duodecimo," "Octavo," "32mo," etc., at one time had

a meaning. These terms indicated the number of times a standard sheet was folded, and from that could be reasoned out about how big a book would be. There is no such thing now as a sheet-size for paper, but the book terms are still retained. One quarto book is liable to vary two inches from another quarto book, and the same with any other size. It is very desirable that there should be uniform sizes adopted for certain classes of books, in order that they may rank uniform upon book shelves. Publishers of law books have attempted the establishment of uniform sizes, but, there being no place of record, the sizes have not been maintained. Government publications have approached uniformity, but in a general way only. There is absolutely nothing to interfere with perfecting a system within six months, providing facilities for the ascertainment of the adopted standards were furnished. This refers also to periodicals.

Paper.—This trade is terribly mixed up in its standards, and becomes more so each succeeding year. There is no established system of market sizes for any of the different kinds of paper, and there is no established method of grading the thicknesses. A paper-makers' committee could systematize the whole thing in one day, if facilities for maintainment were provided.

In addition to the articles which can be referred to as having dimensions, there are in the market a large number of materials having one or more qualities varying in degree. It is desirable that there should be standard consistency by which specification can be intelligently construed. I mention a few examples.

Proof Spirits.—Here we have a term forming the base of specification for alcoholic liquors, and the condition of commercial criterions may be well understood when I state that not one distiller or dealer in five hundred can define what "proof spirits" is, or can intelligently comprehend the application of the term. The United States Government, in inaugurating its distillery revenue system, found no standard which it could make use of. The government, therefore, like an enterprising individual, established a standard of its own.

In Section 3248 of the Revised Statues is defined what substances come under the name of spirits: and Section 3249 establishes that "Proof spirit shall be held to be that alcoholic liquor which contains one-half its volume of alcohol of the specific gravity of .7939 at 60 degrees Fahr." Here we have something definite, and

ing definite, it is immaterial whether it is good or bad. The manufacturing arts could not have established such a standard because there was no authoritative repository.

Acids.—Graded by strengths and expressed by fractions, though sometimes expressed by specific name. No standards.

Gold.—When a metal which is alloyed with gold becomes gold in a mass, or ceases to be gold, is a commercial problem. The purity of gold is expressed as "carats fine," "carats" meaning twenty-fourth pure gold by weight. Pure gold would be twenty-four carats fine.

There has been some sort of a criterion for jewellers' gold, but there is no record of it. The government has established a standard of purity for its coins, together with a designation of permissible variation.

Silver.—No standard.

Brass.—Brass is a compound metal, with a specific name for many of its combinations. There is no standard for general or special application.

Babbit Metal.—A varying compound metal without a standard.

Indigo.—No standard of quality.

Malt Liquors.—No standard of definition. A lot of terms, once having a specific meaning, without a record, are now used without any understanding.

Chloride of Lime.—No standard.

Pig Iron, Steel, and the Metals Generally.—No standards of definition.

Powder.—No standard of grain or strength.

Gas.—No standard of quality. State statutes. Many States and many standards.

Milk.—No standard of quality.

Wine.—Ditto.

Lead Pencils.—No common standard of grade, though there is an attempt toward it.

Chemical Solutions Generally.—No standard of composition or strength.

Lumber.—Standards of definition of quality and name, varying in each locality.

Dry Goods.—No standard of definition of quality.

Leather.—Ditto.

Hides.—Ditto.

Pork.—No common standard of definitions. In some of the

States the law has furnished definitions, but each State is a law unto itself.

Aside from dimensions and consistency there are used, in the arts, certain terms which should have an unvarying meaning. As examples I would mention:

Steam Engines.—Steam engines are built right and left handed, but two parties will seldom agree as to whether a given engine is right or left handed.

Saw Mills.—Ditto.

Doors and Door Locks.—Ditto.

Brick Bonds.—A variety of technical terms, used liberally in all building specifications, but having no common bases of understanding.

Rating of Vessels.—A variety of modes, all without standards.

Tests of Machinery.—No uniform basis of expression.

Aside from things, there are rules of human action, on a common understanding of which life may depend. Rules for the common guidance are generally matters of local establishment. In a land where every man is here to-day and there to-morrow, a local acquirement becomes unavailable in this connection.

As examples of rules of action which would be capable of firm establishment, I would mention:

Railway Signals.—There is a total lack of uniformity, while it is very desirable that there should be a uniform code throughout the country. With the single exception of the whistle signal for backing, there is no railroad signal uniformly understood, while no less than forty different meanings are conveyed by several signals.

Navigation.—In navigation we have a set of rules made uniform and binding by law. In the absence of governmental action there could never have been anything like a common system.

Lights on Vessels.—Ditto.

Rules of the Road.—No establishment, except in a few States, which govern the matter by statute.

Railroad Crossings.—Ditto.

Sports and Games.—Varying rules of local establishment.

STANDARD UNITS.

It might be said that, considering the question of standards, standard units would require the first consideration.

This may be true, but I have deferred mention of them in order

free my subject from anything which could bring up considera-
n of the excellency of certain standards. It is immaterial to the
estion now in hand whether the standard inch is a good inch or
ad inch, so long as it is the accepted inch.

The question of the excellency of the inch comes into the ques-
n of its acceptance, and does not at all enter into the question of
sdom of providing means for recording the standard after accept-
ce. Many of our fundamental units are vague, indefinite, and of
record. Many of the arts require units which have never been
tablished, and many of the arts use units which are differently
nstrued by different persons. Where there are varying units
volved in an art, it will most always be found that choice in their
e will most always be based upon local custom, and that there is
o special preference for one unit over another. It is desirable
at there shall be one unit of common acceptance, and it is per-
ectly immaterial to the present question which of the variety in
uestion is chosen upon.

Units of measurement become of consideration at the foundation
f all practice and of all scientific investigation. The governments
f the earth early recognized this fact, and units of measurement
ave been used. And there is a commendable tendency towards
established international standards. Our units of measurements,
weights, etc., are all arbitrary, and monuments of these units are
eld in government deposits. There is a popular belief that many
of these units have a base in nature, but such is not the case. The
standard measure of length is not a certain pendulum beating a
certain time under certain conditions, but is the distance between
two marks on a monumental rod made a standard by law. When
government establishes a unit it is desirable that the people may
readily procure a specification of that unit. Aside from funda-
mental units there are units of conversion, and with these the
States have had to do individually. The consequence is that
a bushel of corn is one thing in one place and another thing in
another place, and, so far as any national system is concerned, there
are liable to be as many different standards of weight for a bushel
of corn as there are different States. It may be well to look at a
few of our unit standards.

Thermometry and Calorimetry.—No uniform system of measure-
ment or expression.

Hydrometry.—Ditto.

Elastic Pressure.—Commonly expressed in pounds per square

inch; sometimes in atmospheres, which is unintelligible and meaningless; sometimes expressed as referring to an actual zero, and sometimes as referring to a practical zero; and sometimes expressed as height of supported columns.

Vacuum.—No system. Sometimes expressed in pounds per square inch, sometimes in atmospheres, sometimes in height of supported column.

Water Power.—Value sometimes expressed in horse-power units, and sometimes in water-power units of purely local signification.

Boiler Power.—No standard for expressing value ever arrived at, except that proposed by this Society.

Photics.—No established standards of units.

Printing.—Varying standards of measurement have been established by statute in several States. Generally chaotic.

Velocity.—No common unit established.

Lumber.—Local custom governs.

Brick Work.—Ditto.

Plastering.—Ditto.

Roofing.—Ditto.

Ton.—Means one thing now, and another thing then.

Light, Photometry.—No units established.

Electricity.—A system of units is becoming well selected, and needs a record.

Railroad Curves.—No common basis of definition.

Tone.—No standard.

Bolt of Wall Paper.—Not uniformly understood.

Pitch of Roof.—Ditto.

Tonnage.—Ditto.

Lenses.—No capacity standard or expression of value.

Bushel.—Not uniform.

Weights and Measures Generally.—Diverse and confusing.

BUREAU OF STANDARDS.

It is proposed that there shall be a governmental Bureau of Standards in which any respectable representation of a trade or craft, after adopting a standard, may file the same. It is not proposed that the use of such established standards shall be compulsory, but it is proposed that the party representing his goods as conforming to standard, shall be measured by something of respectable significance. It is proposed that governmental over-

ht will insure a more accurate definition of standards than could otherwise arranged for. It is proposed that governmental over-ht will guard against confusion of standards. It is proposed at, after a standard has been established, a description of it can procured by any interested party on payment of reasonable fees. government publication of an established standard is proposed.

BUREAU ORGANIZATION.

It is believed that the proposition for a Bureau of Standards could satisfied by a single additional division and examiner in the Patent ffice. The nature of the proceeding, and the character of the iquiry, and the judicial qualifications on the part of the examiner ould seem in direct line with the present line of duties of the atent Office. The Patent Office has now to do with mechanism nd things of commerce and industry; has to do with drawings of uch matters; has to do with descriptions of such matters, and with harply defined claims pointing out the meat of the description; nd has to do with illustrative models and their careful preservation; nd has to do with photographic reproduction of drawings, and the rinting of specifications of patents whereby any one can get any atent copy for twenty-five cents; and has to do with the publica-ion of the *Weekly Gazette*, containing drawings and claims of very patent as issued, every Tuesday morning. The Patent Office would, therefore, appear to be peculiarly equipped for the proposed work. The installation of the new division would require simply the law, and an additional room in the Patent Office.

THE REQUISITE ENACTMENTS.

An enactment would be required covering, say, the following points:

First. The establishment of a Division of Standards as a subordinate division of the Patent Office.

Second. The provision that any respectable representative body of any craft, trade, vocation, or business, having, by due deliberative proceedings, adopted a standard, and having duly appointed a committee to attend to the government filing of said standards, may, upon due proceedings, file such standard in the Patent Office, and thereupon such standard shall be known as the United States Standard.

Third. Each standard, as filed, should have a consecutive number.

Fourth. Provision should be made by which articles represented as conforming to the established standard, may, if desired, be so marked in a brief manner, and to this end a symbol should be legalized, say, as a mere example, ⊥. This device upon an article, followed by the standard number, would be equivalent to saying, "This car axle has its bearings in conformity to U. S. Standard, No. 728."

"RESPECTABLE REPRESENTATIVE BODY."

Most every business nowadays has its association. These associations represent at least the enterprising elements of the industries and trade of the country. There is no trouble in finding respectable representation to place standards on file.

PATENT OFFICE PROCEDURE.

New statutes adjust themselves to circumstances in course of time. The only object in alluding to them here is to indicate the practicability of a procedure which would accomplish all that is desired by the present proposition.

Assume that the National Association of the Chiefs of Fire Departments, at one of their annual meetings, discuss, as they discuss every year, the matter of a standard hose coupling. Assume that they give up looking for something impossible of attainment, and settle on something possessing the merits of what they are now compelled to use, and what they may have to use for years, with the added merit of uniformity. After the discussion, the standard takes a form so that it can be accurately described and shown by drawings or sample; or a committee assumes this work and reports the standard to the body. The body adopts it as the standard hose coupling.

The body appoints a committee to attend to the filing of the standard, and they furnish him with credentials. He becomes empowered to present the standard for filing and to make necessary alterations or amendments in the description of the same which do not materially alter the standard.

The committee forwards to the Patent Office a specification and drawing, and, if deemed necessary, a sample of the standard, and makes application to have the same filed. The description goes over the whole ground, and describes the entire hose coupling. The Patent Office calls for a more perspicuous definition of what parts are to be comprehended by the standard. The description

ys that the coupling shall be eight threads to the inch, and the ice wants a somewhat better description of the thread in view of e fact that there are many shapes of threads. The office further ints out that the very purpose of the standard might be defeated by ason of the fact that no limiting specification is given for the projec- on of the threaded portion. Too much projection would prevent e clamping of gaskets. Formalities are finally overcome, and the ing is in good shape, and is entirely in the hands of the Patent ffice. Thereupon, the Patent Office may give notice to the pub- c, in the *Patent Office Gazette*, that such a standard is proposed. hose interested may then enter protest, or point out defects. If ny controversy arises the matter may be decided after a hearing, s is usual in case of interfering applications in the Patent Office. inally, the standard becomes filed and established by law, and akes, say, "No. 618." Makers of such hose couplings may, if hey desire, stamp their couplings "⊥ 618." The drawings and descriptions may be printed, the same as is now the case with copies of patents, which are sold at the rate of twenty-five cents each, or ten cents in lots of twenty or more. Certified copies of the samples may be furnished at cost, as is now the case with copies of patent models required in litigations. The filing of the standard may be published in the *Official Gazette*, the same as is now done with patents.

A SECOND STANDARD.

It need not follow that because "⊥ 618" becomes the standard hose coupling, that there cannot be other standard hose couplings. Nothing interferes with another standard for smaller hose, and another for larger hose, and another for the same size hose where the coupling is of the spring-clip type instead of screw type, or for any different kinds of hose couplings. Nor is there any reason why the Fire Engineers, after experience with "⊥ 618" should not get up something better, and be themselves the instrument for filing a new standard for something later and better. There need be no governmental abrogation of a standard once filed; it is sufficient that the new standard becomes filed and takes its new number.

PROMOTION OF THE IDEA.

It is not thought that serious negatives can be brought against the general advisability of the proposed scheme, or against its practicability and expediency. This being assumed, the question

remains: How can the installation of the scheme be best promoted? The enactment by Congress is the thing to be arrived at, as all else will naturally follow. The attention of Congress can be directed to the matter only by a concerted action of respectable weight. The American Society of Mechanical Engineers can hardly, I think, single-handed, bring about the desired action by Congress, nor can the American Society of Civil Engineers, nor the National Electric Light Association, nor the National Telephone Association, nor the American Society of Stove Manufacturers, nor the Society of Chief Engineers of Fire Departments, nor any other individual society. But a joint action, by a number of trade societies, could undoubtedly accomplish the result.

Most every branch of industry now has its representative association, and in most cases its representative periodical literature. It is suggested that the American Society of Mechanical Engineers assume the general burden of the matter in the following series of steps:

First. A well-formulated resolution expressing the object, desirability, and nature of the scheme, such resolution, to take the form of a memorial to Congress.

Second. The appointment of a permanent committee to promote the scheme.

Third. The preparation by that committee, of a roster of all American associations likely to be interested in the project, or to have influence in furthering it, such roster to show the meeting dates, etc., and, if possible, the names of a few distinctively enterprising members who would be apt to appreciate the matter in hand.

Fourth. The preparation by the committee, of a schedule of subjects within the range of each of the Associations, which subjects would properly lend themselves to treatment under the proposed system of standards.

Fifth. The preparation by the committee, of a brief argumentative paper for each association, to be accompanied by the appropriate schedules.

Sixth. The preparation by the committee, of a resolution, for each of the associations, similar to the initiating resolution adopted by the American Society of Mechanical Engineers.

Seventh. A presentation by the committee, of the appropriate resolution, schedule and argument, to the selected enterprising members of the various associations with a view to enlist such members in such procedures in their society as will secure the

option of the resolution, and the transmittal of a duly authenti-
ted copy thereof back to the committee of the American Society
Mechanical Engineers.

Eighth. The preparation of a general argument for committee
e in Congress.

Ninth. The presentation by the committee of all said resolutions,
a general memorial to Congress, through the medium of any
lected Senator or Representative together with the argument.

Tenth. Personal argument by the committee before Congres-
onal committees, when required.

Eleventh. The presentation by the committee, of the matter to
e President for executive recommendation, coincident with or
rior to the presentation of the matter to Congress.

DISCUSSION.

Mr. Oberlin Smith.—I wish to subscribe most emphatically to
arly all that Mr. See has said in his very valuable and interest-
g paper. This is a subject of enormous importance, both scien-
ically and commercially, and the time has come in the develop-
ent of the world when a proper system of standards is needed
everybody as one of the most powerful tools for the advance-
ent of civilization. I have not time here to enlarge very much
on Mr. See's list of subjects for standardization, although with
little thought hundreds of articles might be added.

I think the time is destined to come, and I hope at a compara-
ely early day, when many of the members of miscellaneous
achines, which are now made by the hotchpotch and hit-or-
iss-it method in our regular machine shops, may be classified
d standardized, so that they can be furnished by regular manu-
turers much cheaper than the machine shops can themselves
oduce them, as well as of a much better quality. Not only will
ey thus be made cheaper and more uniform, but a great deal of
necessary brain work will be saved in re-designing them every
me they are wanted, as is done in many draughting-rooms for
ant of any convenient record of nearly similar pieces which have
en previously made.

This reform has already been begun in a somewhat imperfect
nd unsystematic way with some of the small tools used in
achine shops, such as drills, reamers, taps, mandrels, milling-
utters, etc. There is usually, however, very little uniformity
among the different manufacturers of such articles, except in the

case of taps, where the diameter, pitch, thread, angle, etc., *sometimes* conform to the United States Government standard. The standard is a boon as far as it goes, although it is not so perfect but what it must be remodeled and added to at some future time. Even in the case of the taps spoken of, there seems to be no uniform standard for the diameters of shanks, sizes of heads, length of heads, shanks and bodies, width of grooves, taper at point, etc., etc.

In the case of reamers, mandrels, etc., there seems to be still less system regarding lengths, although we are gradually getting down to a method of measuring diameters with considerable accuracy. Besides *tools*, many of which are happily being made outside of the shops which use them, and in the case of which there will doubtless constantly be a tendency towards standardization (owing perhaps to many of their makers belonging to such a sensible society as this, which I trust is going to take up this subject and fight it through to the end), there are some *parts of machines* which are now manufactured outside. Notably among these are bolts, nuts, set-screws, washers, etc. Quite recently the manufacture of cut-gearing has been commenced by a well-known concern, which is another move in the right direction. Other articles that occur to me just now as fit subjects for systematic manufacture are dowel-pins, keys, feathers, thumb-nuts and thumb-screws, cranks, hand-wheels and the handles for each of these together with wooden handles and studs for them to run on, fly-wheels, automatic stop-clutches, treadles, etc., etc.

In my own practice, in the works under my control, I have attempted to adopt some standard of our own, for the things above mentioned; but the time required for a thorough study of the proper proportions for the great number of sizes required (which will bring them into a logical series) prevents the work being done as fully as it should be. The result, then, is that every time a draughtsman needs to decide upon the dimensions of a key or crank, or handle, or what not, he evolves it from his inner consciousness with perhaps not the very best proportions, owing to the lack of comparing it with other sizes which have already been studied out. The general result, if such an un-method is allowed to grow like old moss around a draughting-room, is a great deal of waste time and brain work, and an utter want of system in the patterns, drawings and special tools which gradually accumulate. This brain work should be done once for all by a

mpetent "syndicate" of specialists, something after the manner the conception of the United States standard threads (only ore so), thus making one set of studies and calculations answer r thousands of different manufacturers through long years to me, and so standardizing certain articles in common shop use s very much to cheapen them and make them interchangeable pon machines from different makers. In a word, to be slightly aradoxical, common sense dictates the production of ordinary rticles by specialists, on a special system, leaving only special rticles to be produced by the ordinary manufacturer.

I thoroughly agree with Mr. See as to the propriety of this Society, as well as other associations of scientists and engineers, aking up this subject and urging its importance upon Congress until some provision is made for proper government supervision. I also think with him that probably an amplification of the scope and *personnel* of the Patent Office would be the proper direction in which to look for the location of such a bureau of standards.

I differ with Mr. See, however, in one important particular. I do not think any individual or association of individuals should be allowed and empowered to form a standard, no matter how illogical and unsystematic it may be, by which other people are by government authority invited to abide. I would enlarge upon Mr. See's idea by suggesting a large and well-paid *National Commission*, with a responsible head, whose members should be of the highest grade of talent as specialists in this particular line, and should be selected by the aid and advice of our leading technical colleges and engineering societies.

All proposed standards should be submitted to this commission. It should make careful inquiry as to the requirements of each case, revising the schemes offered and returning them to their proposers for approval or further suggestions; and so on, until something mutually satisfactory was reached. Even with such supervision they would be somewhat imperfect, but very much nearer an ideal permanent standard than without it.

The question of a set of standard units of measurement to be used by this commission would of course come up, and in the present chaotic state of our weights and measures could not be very perfect. The pound and inch, however, and other units derived from them, would be the most practical to use at present, and would comport best with the best practice in this as well as several other important countries. Such a commission as I

suggest, upon receiving a proposed standard for the sizes of books, for instance, where the widths ran in such a series as $4\frac{3}{8}''$, $5\frac{1}{4}''$, $6\frac{1}{3}''$, $7\frac{5}{16}''$, etc., and the lengths in a correspondingly ragged series, might say:—"Gentlemen, your proposed standard will be received if modified so as to read with all widths and lengths expressed in any number of whole inches for the extreme outside measurement of covers." Thus the sizes of books could be briefly described as are panes of glass, as 5x7, 6x8, 10x12, etc. If it was desirable to know the thickness, the third measurement could be appended, as 6x8x2. This would not only be a great convenience to librarians and other book-buyers, but to business men, as applied to books of record in their offices. If a proposed standard was submitted for standard fruit-cans (a field, by the way, where reform is urgently needed, on account of the heads and other fittings being sold separately), the revisers could eliminate a lot of the $\frac{1}{32}$nds and $\frac{1}{64}$ths which are now prevalent, and have them run by $\frac{1}{8}$ths or $\frac{1}{4}$ inches, both in diameter and length. In sizes for machine-screws and other small round articles, the measurements could be in thousandths of inches, with a proper and reasonable scheme of progression. One advantage, at any rate, gained by such supervision, would be an occasional early death among some of the numerous wire gauges which are constantly springing into life. Surely, a sufficient argument for stopping this pestilent brood from increasing and multiplying s the outrage quite recently perpetrated upon the mechanical public by a lot of the prominent wiremen, in the shape of a so-called new "National Wire-gauge," when we had already suffered enough by the new English one, which has been established by the Board of Trade, etc., for the past year or two. Both of them contain most of the illogical stupidities of the other gauges, "Stubbs," "Birmingham," "Browne & Sharpe," "screw" gauges, "rivet" gauges, "zinc" gauges, etc., and only tend to make confusion worse confounded, especially as some of them run with high numbers for the thicker measurements, but most of them in reverse order. This whole business could be straightened out by competent authority in fifteen minutes, by abolishing all the present gauges and simply ordering a new one whose numbers should correspond to the numbers of thousandths of inches represented by each size. This would answer perfectly well for all kinds of wire and sheet metal, as well as for paper, glass, leather and other materials. Special gauges might be made, resembling in appearance

mewhat more complete form than it is at present. Will you ke any action upon the recommendation of the paper?

*Mr. See.**—The discussion would indicate that some of the embers would give to my paper a much further-reaching funcon than was immediately intended. I am myself one of those ho believe that the arts are full of reckless things that had beter be standardized, and I also believe that most of the accepted tandards of to-day are defective. But to have the government tandardize articles that have never been standardized, and to subtitute new and improved standards for standards already in use, s not what the proposition of my paper looks to. It looks to a governmental record of what has been or will be accomplished. The very act of making the record in the manner proposed will necessarily result in getting things down to a clear definition, to freedom from ambiguity, and that is what we want. Changes will be made in the future precisely as they have been made in the past, but they will be made more understandingly and with something based on a common experience.

Mr. Smith has referred, for instance, to the matter of screwhreads, etc., stating that they "sometimes conform to the United States Government standard. This standard is a boon as far as t goes, although it is not so perfect but that it must be remodelled and added to at some future time." Here is a case of a fairly accepted standard. Be it good or bad, I want it recorded where we can all get at it. It is not a government standard any more than it is the Smith standard. Some government workshops have adopted the thread, etc., in their work, and so have many of the Smith shops. I do not propose that the government shall have any more to do with the filing of standards than to furnish a governmental archive for the filing. If the government happens to have anything good and worthy of filing, let the government go to work and file it precisely as any other respectable body would file a standard which it approved.

The general idea of my paper is not based so much upon the lack of standards as upon a lack of record of those standards. I think if there was a place of record there would be a better lot of standards, and a general tendency toward the improvement of them.

Mr. Nason refers to steps that were taken regarding the standards for steam fittings. This Society discussed the matter with

* Author's closure, under the Rules.

Prof. J. B. Webb.—I approve very heartily of most of what Mr. See says with reference to the necessity of having standards. The trouble is, that it requires an immense amount of work to decide upon and produce the proper standards, and I imagine it will require considerable time. In addition to the different articles Mr. See mentions, and he gives a great many, I wish to name one more. The Government themselves can standardize their postal matter in a way that will improve the postal service; they have done it to some extent by postal cards and letter sheets. It has been proposed at various times to reduce the postage from two cents to one cent; but why should it not be reduced to one and three-quarters or one and a half cents? A fractional price would cause no difficulty, as but few stamps are sold singly. Now, these two improvements could easily be combined and made to help each other. Let the price of stamps remain as at present; but let stamped envelopes and letter sheets be lowered in price sufficiently to make it an object to use them, and then let them be furnished in as few sizes and qualities as possible. We are getting too far along toward the twentieth century to have the fast mails composed of envelopes of every conceivable size, shape, color and quality, and mail could be handled better and quicker were they and the postal cards of one standard pattern. Standard stamped envelopes and cards should also be regular articles of merchandise, purchasable at any stationer's at a fixed schedule of prices varying with the quantity, so as to leave a margin of profit to the retailer. When this was accomplished, the next step would be to introduce a supplementary means of addressing an envelope by punching a combination of notches in one edge of it, so that the distribution could be effected by automatic machinery. This would be of use at first only for large post-offices; but there is nothing to hinder a letter thus notched from being automatically deposited in its proper pouch, ready for the train, a few seconds after it is dropped in the slot.

The President, H. R. Towne.—If the suggestions in the paper commend themselves to the meeting, a proper step would be to move for the appointment of a committee on the outline indicated in the paper, that committee to take the whole subject under consideration and report to the Society at its next meeting. Such a step at the present time of course commits the Society to nothing whatever, beyond the obtaining of further information on the subject, and having it brought before a subsequent meeting in

mewhat more complete form than it is at present. Will you ke any action upon the recommendation of the paper?

*Mr. See.**—The discussion would indicate that some of the embers would give to my paper a much further-reaching funcon than was immediately intended. I am myself one of those ho believe that the arts are full of reckless things that had betr be standardized, and I also believe that most of the accepted tandards of to-day are defective. But to have the government tandardize articles that have never been standardized, and to subtitute new and improved standards for standards already in use, s not what the proposition of my paper looks to. It looks to a governmental record of what has been or will be accomplished. The very act of making the record in the manner proposed will necessarily result in getting things down to a clear definition, to freedom from ambiguity, and that is what we want. Changes will be made in the future precisely as they have been made in the past, but they will be made more understandingly and with somehing based on a common experience.

Mr. Smith has referred, for instance, to the matter of screwhreads, etc., stating that they "sometimes conform to the United States Government standard. This standard is a boon as far as t goes, although it is not so perfect but that it must be remodelled and added to at some future time." Here is a case of a fairly accepted standard. Be it good or bad, I want it recorded where we can all get at it. It is not a government standard any more than it is the Smith standard. Some government workshops have adopted the thread, etc., in their work, and so have many of the Smith shops. I do not propose that the government shall have any more to do with the filing of standards than to furnish a governmental archive for the filing. If the government happens to have anything good and worthy of filing, let the government go to work and file it precisely as any other respectable body would file a standard which it approved.

The general idea of my paper is not based so much upon the lack of standards as upon a lack of record of those standards. I think if there was a place of record there would be a better lot of standards, and a general tendency toward the improvement of them.

Mr. Nason refers to steps that were taken regarding the standards for steam fittings. This Society discussed the matter with

* Author's closure, under the Rules.

the pipe-makers of the country, and it resulted in the final recommendation of the adoption of the Briggs gauge, "and that was so done." That is all right as far as it goes; but it does not go at all, for the simple reason that there is no general authentic record of what was done. If I wanted to go into the pipe business, and wanted to find out what the Briggs gauge was, I might get one definition of it from some pipe-makers' association, and another definition from this association, if an outsider could get them at all, and I might get an entirely different understanding from Mr. Briggs' writings, or from reputable tool-makers supposed to be working under the Briggs gauge. The proposition of my paper is not concerned with the goodness or badness of the Briggs gauge but lays down the broad ground that if this gauge is good enough to be recommended by such authorities as manufacturers of pipes and fittings and this Society, it is good enough to put on record in an accurate manner.

Mr. Suplee says that the "Convention of the National Association of Builders adopted a standard size for brick, in order to remove a difficulty which has troubled builders all over the country . . . and decided to use it hereafter all over the country. So that it would appear that there is an effort by permanent associations to standardize matters for themselves without the aid of a national bureau." Now, I do not propose that any national bureau shall standardize bricks or anything else; but I do propose that it shall furnish a respectable place of record for standards recommended by such high authority as the National Association of Builders. Under the present plan the builders all over the country will have to trust to luck to find out what the recommended standard is. I propose that twenty-five cents, expended in the Patent Office, shall give them a clearly-defined specification of the standard brick.

In my paper I note quite a lengthy list of articles susceptible of being standardized. I do not propose that the government shall have anything to do with standardizing these things or making them standard. I propose that standards recommended by respectable associations shall be filed where they can be got at, and I further propose that such a system will encourage the arts in standardizing many things now in chaotic shape. I think the ultimate result of the system would be that the Government would officially file standards in this bureau covering fundamental units. This will come about in time, but I believe in starting

ıy. The entire proposition of my paper regarding a bureau for › filing of standards, not the making of the standards, be it noted, ı, I believe, be gotten into full working order within six months er the passage of the necessary law, and I believe that the ıefits of the bureau would be felt in the arts from the day the t standard was filed.

'he motion for the appointment of such a Committee as is proposed in this paper ıuly put and carried, and the President subsequently appointed

Mr. JAMES W. SEE, of Hamilton, Ohio,
Dr. COLEMAN SELLERS, of Philadelphia, Pa.,
Mr. OBERLIN SMITH, of Bridgeton, N. J.,

ch Committee.]

CCCXXXVIII.

CYLINDER RATIOS OF TRIPLE-EXPANSION ENGIN

BY JAY M. WHITHAM, FAYETTEVILLE, ARK.

(Member of the Society.)

THE triple-expansion engine promises to displace the ordi compound engine for marine use, as it in turn displaced the si engine of thirty years ago. During the past two years the inc in the number of such engines has been phenomenal. This may now be called the favorite marine type, while it bids fa establish itself for stationary purposes wherever great power economy are desired. Whenever the steam pressure exceeds lbs. gauge, the triple-expansion engine is used, while the tend is towards quadruple expansion when the pressure exceeds 17(

Existing practice in proportioning the cylinders of triple-expa engines is given in Table I. In it the particulars of eighty en of recent design are given, the engines being grouped accordi boiler pressures. The tendency, as shown, is towards an inc in piston speed and boiler pressure, and a consequent decrea weight and first cost of machinery. Equal work should be formed in each cylinder, uniform rotative effort secured, and initial strains in all moving parts obtained. These can be n obtained by dividing the work among three or more cylinders, the triple-expansion engine, and by the use of variable expa valves and balanced rotative parts.

When the piston speed varies from 750 to 1,000 feet per mi the following cylinder ratios are recommended as the result study of Table I. (the terminal pressure of steam in the cylinder being about 10 lbs. absolute), viz.:

CYLINDER RATIOS RECOMMENDED FOR TRIPLE-EXPANSION ENGINES.

Boiler Pressure (Gauge.)	CYLINDER RATIOS.		
	Small.	Intermediate.	Large.
130	1	2.25	5.00
140	1	2.40	5.85
150	1	2.55	6.90
160	1	2.70	7.25
170 and upwards—quadruple-expansion engine to be used.			

Two methods* of ascertaining the diameter of pistons will now ; given.

1. Annular Ring Method.†—In Fig. 148 lay down a theoretical dicator diagram of a simple engine for the particular expansion esired. Lay off the back-pressure line as shown. By trial find vith the polar planimeter or otherwise) the position of the lines)E and FG such that the three areas marked "A," "B," and "C" re respectively equal. Find the mean ordinate of each area: that f "C" will be the mean unbalanced pressure on the small piston; hat of "B" will be the mean unbalanced pressure on the area emaining after subtracting the area of the small piston from that f the intermediate; and that of the area "A" will denote the nean unbalanced pressure on a square inch of the annular ring of he large piston obtained by subtracting the intermediate from the arge piston. We thus see that the mean ordinates of the two ower cards act on annular rings.

Let H = area of small piston in square inches.
I = " " intermediate piston in square inches.
L = " " large " " " "
p_h = mean unbalanced pressure per square inch from card "C."
p_i = " " " " " " " " "B."
p_l = " " " " " " " " "A."
S = piston-speed in feet per minute.
$(I.H.P.)$ = indicated horse-power of engine.

hen for equal work in each cylinder we have

$$\text{Area of small piston} = H = \frac{33000 \times \frac{(I.H.P.)}{3}}{p_h \times S} \quad . \quad (1.)$$

$$\left.\begin{array}{r}\text{Area of annular ring of}\\ \text{intermediate cylinder}\end{array}\right\} = \frac{33000 \times \frac{(I.H.P.)}{3}}{p_i \times S}$$

$$\text{Area of intermediate piston} = I = H + \frac{33000 \times \frac{(I.H.P.)}{3}}{p_i \times S} \quad . \quad (2.)$$

* The writer believes that both methods as applied to triple-expansion engines are here published for the first time.

† The *principle* of the annular ring method is given in the writer's treatise on *Steam Engine Design*, now in press by John Wiley & Sons, N. Y.

$$\text{Area of annular ring of large piston} = \frac{33000 \times \frac{(I.H.P.)}{3}}{p_l \times S}$$

$$\text{Area of large piston} = L = I + \frac{33000 \times \frac{(I.H.P.)}{3}}{p_l \times S} \quad . \quad (3.)$$

This method is illustrated by the following:

Example: Given $I.\ H.\ P. = 3000$, piston speed $S = 900$ ft. per minute, ratio of expansion 10, initial steam pressure at cylinder 127 lbs. absolute, and back-pressure in large cylinder 4 lbs. absolute. Find cylinder diameters for equal work in each (Fig. 148).

The mean ordinate of "C" is found to be $p_h = 37.414$ lbs. per sq. in
" " " " "B" " " " $p_l = 15.782$ " " "
" " " " "A" " " " $p_l = 11.730$ " " "

Then by (1), (2), and (3) we have—

$$H = \frac{33000 \times \frac{3000}{3}}{37.414 \times 900} = 980 \text{ sq. ins., diameter } 35\tfrac{3}{8}''.$$

$$I = 980 + \frac{33000 \times \frac{3000}{3}}{15.782 \times 900} = 3303 \text{ sq. ins., diameter } 65''.$$

$$L = 3303 + \frac{33000 \times \frac{3000}{3}}{11.730 \times 900} = 6432 \text{ sq. ins., diameter } 90\tfrac{1}{2}''.$$

2. "Drop" Method.—In Fig. 149 lay down a theoretical card as in Fig. 148. Choose cylinder ratios from the table of recommended values. Draw FG, DE, and JK in these ratios, dividing the diagram into three parts, "A," "B," and "C." Round off the corners so as to make the figure conform as nearly as possible to the combined card from an engine of this type. The waste spaces are due to "drop," condensation, etc. The mean ordinate of this combined card will give the mean unbalanced pressure on a square inch of the large piston, as if all the work had been done in its cylin-

r. With this find the area of the piston necessary for all the work. vide this area of piston by the cylinder ratio, thus obtaining the as of each piston, as follows:

Example: Given data of previous example, and cylinder ratios 1 to 2.25 to 5.00, find diameter of each cylinder (Fig. 149).

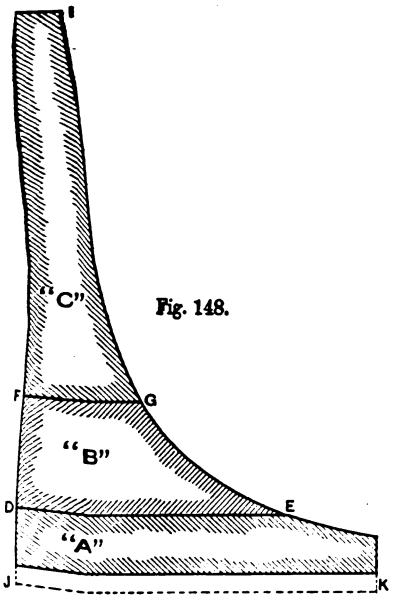

Fig. 148.

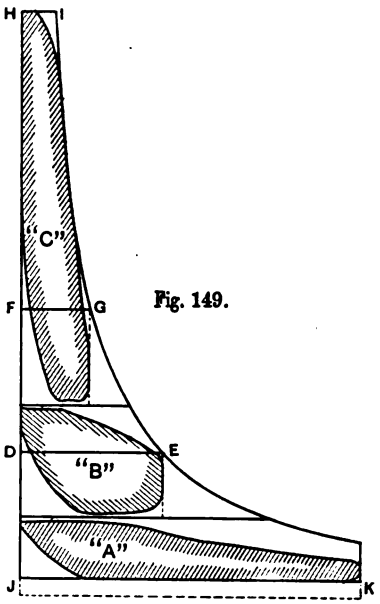

Fig. 149.

The mean ordinate of the combined card is measured to be 17.5 lbs., hence

$$\text{Area of large piston} = L = \frac{3000 \times 33000}{17.5 \times 900} = 6286 \text{ sq. ins., diameter } 89\tfrac{1}{2}''.$$

$$\text{Area of intermediate piston} = I = \frac{2.25L}{5.00} = 2829 \text{ sq. ins., diameter } 60''.$$

$$\text{Area of small piston} = H = \frac{L}{5.00} = 1257 \text{ sq. ins., diameter } 40''.$$

The results obtained by the two methods accord quite closely. The main point to be considered is, "How large shall the condensing cylinder be made?" The small and intermediate cylinders may have almost any values, provided variable expansion valves are used.

TABLE I.

SHOWING CYLINDER RATIOS OF TRIPLE-EXPANSION ENGINES FOR VARIATIONS IN THE BOILER PRESSURE.

Vessel.	Piston Stroke in Inches.	Cylinder Diameters in Inches.			Cylinder Ratios.			Boiler Pressure. Gauge.	Piston. Speed in feet per minute.	I. H. P.
		H. P.	I. P.	L. P.	H. P.	I. P.	L. P.			
Gunboat No. 1	30	22	31	50	1	2.00	5.17	160	. . .	3000*
Montebello	16	15½	24	37	1	2.40	5.70	160	1066*	4200*
Iljin	18	17½	27	42	1	2.38	5.76	160	. . .	3550
Oroya	72	40	66	100	1	2.72	6.25	160	774	6750
Orizaba	72	40	66	100	1	2.72	6.25	160	756	6500
Buffalo	60	33	54	86	1	2.68	6.80	160	570	2278
Bléville	42	21	33	52	1	2.47	6.13	160	490	1223
Vespasian	30	17	29	46	1	2.91	7.32	160	400*	600*
Aberdeen	33	17	28½	51	1	2.81	9.00	160		
Altmore	36	22	36	66	1	2.68	9.00	160		
Anchoria	48	36	59	96	1	2.69	7.11	160		
Cosmopolitan	39	19½	32	52	1	2.69	7.11	160		
Cremon	42	20	31½	50	1	2.48	6.25	160		
Earnholm	30	17	27	48	1	2.56	7.97	160		
Explora	36	20	33	54	1	2 72	7.54	160		
Gulf of Suez	39	19½	32	52	1	2.69	7.11	160		
Hecla	33	17	28	47	1	2.71	7.64	160		
Mexican	54	36	58	94	1	2.60	6.82	160		
Pacifique	54	26	42	69	1	2.61	7.04	160		
Trojan	60	34	54	89	1	2.52	6.85	160		
Sevona	39	21	35	58	1	2.78	7.63	160		
Athenian	54	36	58	94	1	2.61	6.82	160		
Birkhall	36	17	31	57	1	3.32	11.20	160		
City of Lincoln	42	26	42	68	1	2.60	6.82	160		
De Ruter	42	21	38	66	1	3.27	9.87	160		
Etna	33	17	28	46	1	2.71	7.32	160		
Spartan	60	34	54	89	1	2.52	6.85	160		
Average cylin. ratios for 160 *lbs. boiler pressure*					1	2.66	7.24			
Dogali	33	30	45	73	1	2.25	5.92	150	842	7600
Ormuz	72	46	73	112	1	2.52	5.93	150	840	8000
Aller	72	44	70	108	1	2.53	6.03	150	828	6890*
Saale	72	44	70	108	1	2.53	6.03	150	828*	6890*
Trave	72	44	70	108	1	2 53	6.03	150	828*	6890*
Trans-Pacific	60	34	56	90	1	2.71	7.01	150	. . .	4000*
Carmarthenshire	45	27	43	70	1	2.54	6.72	150	568	2340
Libra	42	25	42	67	1	2.82	7.18	150	616	1966
Sobralense	42	2–17	38	60	1	2.50	6.23	150	532	1580
Westmoreland	36	20	33	54	1	2.72	7.29	150	420	900
Royal Prince	39	20	33	54	1	2.72	7.29	150	431	767
City of Edinburgh	48	30	44	73	1	2.15	5.92	150		
Congella	42	21	34	56	1	2.62	7.11	150		
Constantin	. .	12½	20½	34	1	2.69	7.40	150		
Ehrenfels	48	25	38	72	1	2.31	8.29	150		
Florence Richards	30	18½	27	48	1	2.13	6.73	150		
Thames	36	21½	33	54	1	2.36	6.31	150		

* Probable value.

TABLE I.—*Continued.*

NG CYLINDER RATIOS OF TRIPLE-EXPANSION ENGINES FOR VARIATIONS IN THE BOILER PRESSURE.

Vessel.	Piston. Stroke in Inches.	Cylinder Diameters in Inches.			Cylinder Ratios.			Boiler Pressure. Gauge.	Piston. Speed in feet per Minute.	I. H. P.
		H. P.	I. P.	L. P.	H. P.	I. P.	L. P.			
ıgen	18	10	16	26	1	2.56	6.76	150		
ano	36	21½	34	55	1	2.51	6.54	150		
nond Castle	57	33	58	88	1	3.09	7.11	150		
	48	33	53	88	1	2.58	7.11	150		
dale	33	17	27	52	1	2.56	9.36	150		
ılly Castle	57	31	51	82	1	2.71	7.00	150		
Otto	36	20	32	57	1	2.56	8.12	150		
King	48	26	42	68	1	2.61	6.84	150		
	45	26	41	70	1	2.34	7.25	150		
	33	17½	29	47	1	2.75	7.21	150		
ın	44	25	38	63	1	2.31	6.35	150		
ge cylind'r ratios for 150 *lbs. boiler pressure*					1	2.54	6.90			
ıctor	21	18½	27	42	1	2.13	5.16	145	1023	3829
ı	60	40	64	92	1	2.56	5.29	145	700	3417
ge cylinder ratio for 145 *lbs. boiler pressure*					1	2.35	5.23			
ıt	33	26	37	57	1	2.03	4.81	140		4500*
ı	33	26	37	57	1	2.03	4.81	140		4500*
ıle	24	18½	29	43	1	2.51	5.40	140	732	1042
	24	18½	29	43	1	2.51	5.40	140	732	1025
r	24	18½	29	43	1	2.51	5.40	140	810	1291
	24	18½	29	43	1	2.51	5.40	140	772	1157
snake	18	18½	27	42	1	2.13	5.16	140	966	2860
Regente	45	40	60	92	1	2.25	5.28	140	862*	12000*
ıor	30	18	30	56	1	2.75	9.68	140		
l	66	35	56	89	1	2.56	6.47	140		3200*
andel	66	35	56	89	1	2.56	6.47	140		3200*
ge cylinder ratios for 140 *lbs. boiler pressure*					1	2.40	5.84			
	51	43	62	96	1	2.08	5.00	135	807*	12000*
gar	51	43	62	96	1	2.08	5.00	135	807*	12000*
ıore	42	42	60	94	1	2.04	5.01	135	770	10750*
ge cylinder ratio for 135 *lbs. boiler pressure*					1	2.07	5.00			
ia	48	38	58	88	1	2.33	5.36	130		12000*
ıreil	48	38	58	88	1	2.33	5.36	130		12000*
ı	42	36	51	78	1	2.00	4.70	130		8500*
ılia	42	36	51	78	1	2.00	4.70	130		8500*
a	42	36	51	78	1	2.00	4.70	130		8500*
talité	42	36	51	78	1	2.00	4.70	130		8500*
lo	42	36	52	78	1	2.08	4.70	130	832	8662
ınted	42	36	52	78	1	2.08	4.70	130		8500*
sus	42	35	5	78	1	2.12	4.97	130		8500*
ge cylinder ratios for 130 *lbs. boiler pressure*					1	2.10	4.88			

* Probable value.

DISCUSSION.

Mr. H. W. Spangler.—It is perhaps interesting to go back to the original method of designing compound engines. They were to a very great extent designed in this way: The ratio of expansion was first determined. The square root of the ratio of expansion was taken as the ratio of the volume of the two cylinders. When it comes to triple expansion engines, perhaps the same theory would fit closely, and it would necessitate in this case that the ratio of the volumes of the cylinder should be as $\frac{1}{3}$, $\frac{2}{3}$ or $\frac{3}{3}$ power of the volume of the low-pressure cylinder. (See Gow, *Franklin Institute Journal*, Sept., 1888.) If that is the case in any particular instance, the square of the volume of the intermediate cylinder should be equal to the product of the volume of the other two; and on page 583 the author refers to what is approximately the actual card. He gives for the area of the large piston $89\frac{1}{2}$ and the small one 40; 40 times $89\frac{1}{2}$ is almost the square of 60—the intermediate cylinder. So it seems to me that that is a pretty convenient way of getting at it. As to the ratio of the volumes, in these tables he has worked out from a number of examples the mean figure, and it is perhaps interesting to see how this can be given a little more easily. He says on the first page of the examples, page 484, that for 160 pounds pressure the average cylinder ratios are as 1 to 2.66 to 7.24. Now, 2.66 times 7.24 is almost exactly 19, and 19 is the ratio between the terminal pressure and the forward pressure likely to obtain in these engines. So, if you apply reasoning of that sort, it will give you as close work as he can get by the method he gives. It works very closely even in his table of results. He gives for 130 pounds 1, 2.25 and 5; 2.25 is almost exactly the square root of 5, and the same right through approximately.

With respect to the first method, which the author calls the annular ring method, that is, I think, only an amplification of the method that was proposed to Mr. Isherwood a good many years ago to explain the action of steam in a compound engine, and it seems to me to be fallacious. He says, on page 581: "Find the mean ordinate of each area; that of *C* will be the mean unbalanced pressure on the small piston." If that is so, *B*, to my mind, should be the mean unbalanced pressure of the next piston, because the work that is done in any piston is the volume traversed multiplied by the unbalanced pressure per square foot. The

unbalanced pressure is acting on that piston. But while there is no question that the volume traversed in this particular case is the distance *DE* for the intermediate piston, the mean unbalanced pressure from the card is the mean unbalanced pressure of the area remaining after subtracting the small pressure, according to Mr. Whitham. I cannot see the reasoning, but it seems to me that it is not sound.

As to his method of treating curves on Figure 149, it is well known that, even if the clearance in the low-pressure cylinder is considerably less in proportion than that in the high, the left-hand side of the card in this figure that he has (149) should be at a considerable distance from the clearance; that is, he should have cut off another corner of these cards to get anything like the actual cards. The left-hand corner of the card A should be cut off to perhaps one-half the distance to *FG*. It makes considerable difference in the card. Of course, this is only intended as an approximation from the beginning; but it seems to me a closer approximation could be gotten if he had made a reasonable allowance for the amount of clearance.

Mr. H. H. Suplee.—Although this paper refers to triple expansion, yet I suppose the subject is really that of multiple expansion. I have some data about quadruple expansion engines which may be of interest in this connection. In the *Journal of the American Society of Naval Engineers* for February are given quite a number of details and data about fourteen different quadruple expansion engines, and I have reduced the cylinder areas to the common standard in order to get at their ratios. The pressures vary somewhat, which of course makes some discrepancy; but nearly all are intended to be operated at a pressure of about 180 pounds to the square inch, and, with one or two exceptions, which may be due to special conditions, the cylinder areas seemed to run almost in the proportion of 1, 2, 4, 8. Averaging the whole number, I have 1 to 2 to 3.78 to 7.70. Although I think that—with the exception of one or two that are quite different and apparently calculated for different conditions—eliminating those—it would come out almost exactly in the proportion of geometrical ratio, while the actual expansion ratio is very nearly in the same proportion as that to which Mr. Spangler has referred. This may be of interest in this connection.

Mr. F. H. Ball.—I do not see that much attention is given here to the matter of dividing the range of temperature in the different

cylinders. This formula, as I understand it, is for dividing the load, so that each cylinder shall do its share of the work. Now, by changing the point of cut-off, the amount of work of each cylinder can be varied quite considerably; and inasmuch as compound and triple expansion engines are for the purpose of preventing cylinder condensation, it seems to me important to pay some attention to the range of temperature in each cylinder. This may be covered in the table where there are different proportions given for different pressures. But I do not see anything about it in the paper; and I think there is a latitude, in proportioning these cylinders, which will permit of an equal division of the work, and at the same time, if better proportioned, for equal division of range of temperature from the highest to the lowest.

Prof. Denton.—I think that point is covered by the fact that Mr. Whitham bases his rules upon a table which is quite extensive, and taken from practice which fulfils the condition mentioned by Mr. Ball.

Mr. W. S. Doran.—It may be of interest to the members to know the size of the triple expansion engines that have just done some very wonderful work on the *City of Paris*. These engines have cylinders 45 by 71 by 113, 5-foot stroke; twin screws; the engines developing 20,200 horse-power. They are supposed to be very successful.

The President.—It would be interesting if we could have some additional information as to the vessels referred to—the fastest of the Atlantic service at the present time.

Prof. Denton.—I would like to ask Mr. Doran what are the dimensions of the screws of that ship.

Mr. Doran.—I do not know exactly—about 20 feet diameter I think they are; 28 feet pitch; there are three blades; phosphor-bronze screws.

Prof. Denton.—Plain screws?

Mr. Doran.—Three blades. The boiler pressure carried on this ship is 150 pounds.

Prof. De Volson Wood.—I have noticed in some actual triple expansion engines that the low-pressure cylinder seemed to be much larger than those usually made. There are a good many cases, I think, where there are somewhat larger proportions than those which have been intimated, and a few where they are very much larger. If such be the case, I would like to inquire of those who have knowledge in regard to triple expansion engines.

why this is the case. Why are they so made? Is it a notion of the engineer which has not been confirmed, or is there some good reason for it?

Mr. Doran.—I would like to add that the speed at which these engines run is something very unusual. They turn up about 92 revolutions a minute and a five-foot stroke.

The President.—That would be 900 feet piston.

Mr. Doran.—About 920 feet. They worked cool and quiet under these conditions.

*Mr. Whitham.**—The annular ring method of proportioning the cylinders has been applied by me to many existing compound and triple expansion engines with most satisfactory results. This I did in order to check the accuracy of this method. It is only one of the many ways used, or that might be used, in proportioning the cylinders. The theory has been most ably explained by Chief Engineer Isherwood, of the Navy, and has never been *proven* fallacious. I have not time to here enter into a defence of this method. This way of proportioning cylinders was given to the Society because it is simple and accurate when judged from existing practice. The second method is given for the same reason. The error due to an inaccuracy in not treating the clearance in the most theoretical manner is no greater than in assuming that the steam expands by the hyperbolic law, and tends to balance it. The designer cannot lose time in exact solutions involving the use of the most complicated formulæ or methods. It has been said that the best way to design a cylinder is to guess at the dimensions, and double them. While this is not to be recommended, no designer allows his deduced results to entirely control him when he has successful practice as a guide. The two methods are given, not to replace other methods, but as *new* ways in which the cylinders may be proportioned.

Prof. Denton has so fully answered Mr. Ball that I need add nothing further.

---

* Author's closure under the Rules.

CCCXXXIX.

IMPROVED MOTION DEVICE FOR ENGINE INDICATORS.

BY A. W. JACOBI, NEWARK, N. J.
(Member of the Society.)

WITH the introduction in late years of large engines, especially of the compound type, and with the increased inte manifested in indicator tests of engines of this class, engineers a need of a simple motion device—something that is easily appl and, when in position, occupies the least possible space. It sho be adjustable to a wide range of sizes and conditions, and to engi of various makers. It should be as light as is consistent w strength, and so designed as to be easily packed in boxes, thus m ing it convenient to be carried around. The stretch of string sho be reduced to a minimum, and it should be arranged to operate number of indicators simultaneously, at either short or long tances from the reducing motion, and take, practically, all strain the drum spring of indicator. It should enable the operator to sto start any one or more of the indicators independent of the rest w out leaving his position, and without stopping the reducing mot Such a device, the writer thinks, will be appreciated by engine and builders of steam and pumping engines, air compressors, e and in presenting the following description of one recently inven by E. K. Conover, of Newark, N. J., it is believed that all above points, as well as many additional ones, have been stud and met in this arrangement. In the accompanying cut, Fig. represents a side elevation, and Fig. 132 a plan of the apparatu applied to a tandem compound engine. Applications to other ki of engines will suggest themselves to the engineer, so this desc tion will cover especially this type of engine. The motion de and indicators are exaggerated in proportion to the engine in or to show them more clearly. A glance at the engraving will sh that the prime feature of the device is an endless cord operated both directions entirely by the engine, thus relieving the indica drum spring of all strains except those due to its own propulsi

A. W. JACOBI.

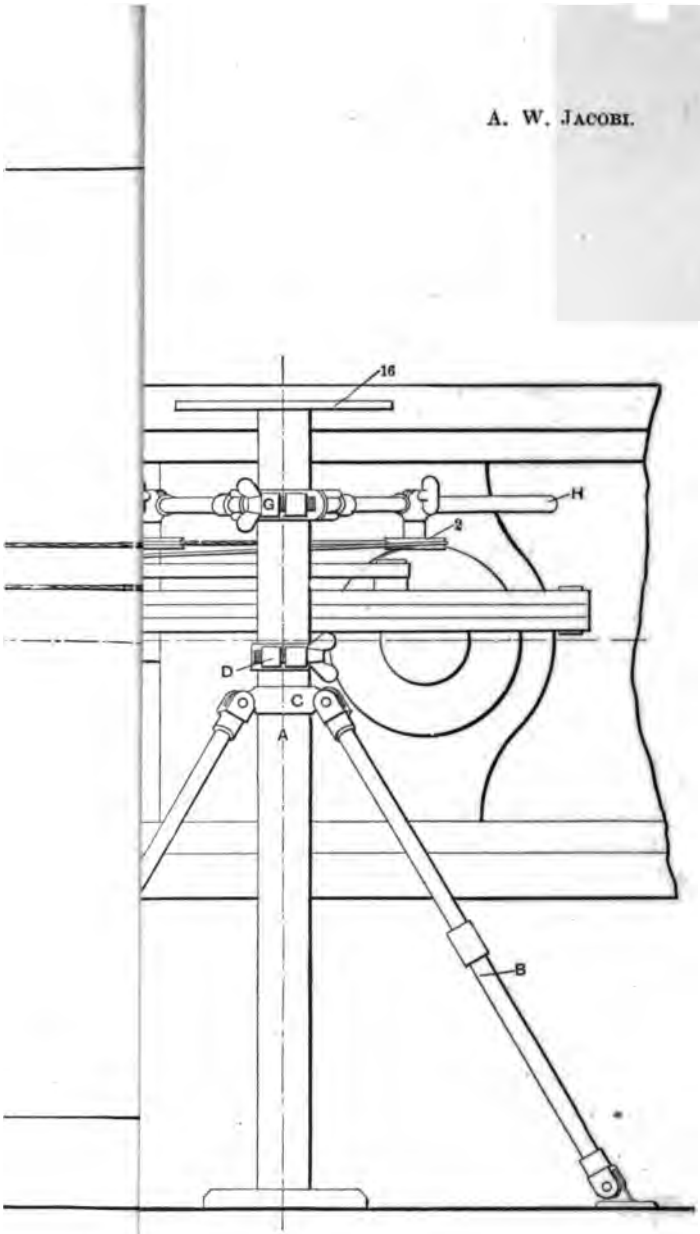

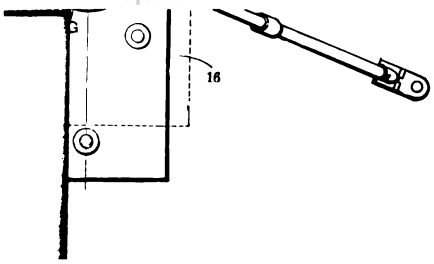

... clearly. A glance at the engraving will show that the prime feature of the device is an endless cord operated in both directions entirely by the engine, thus relieving the indicator drum spring of all strains except those due to its own propulsion.

A. W. JACOBI.

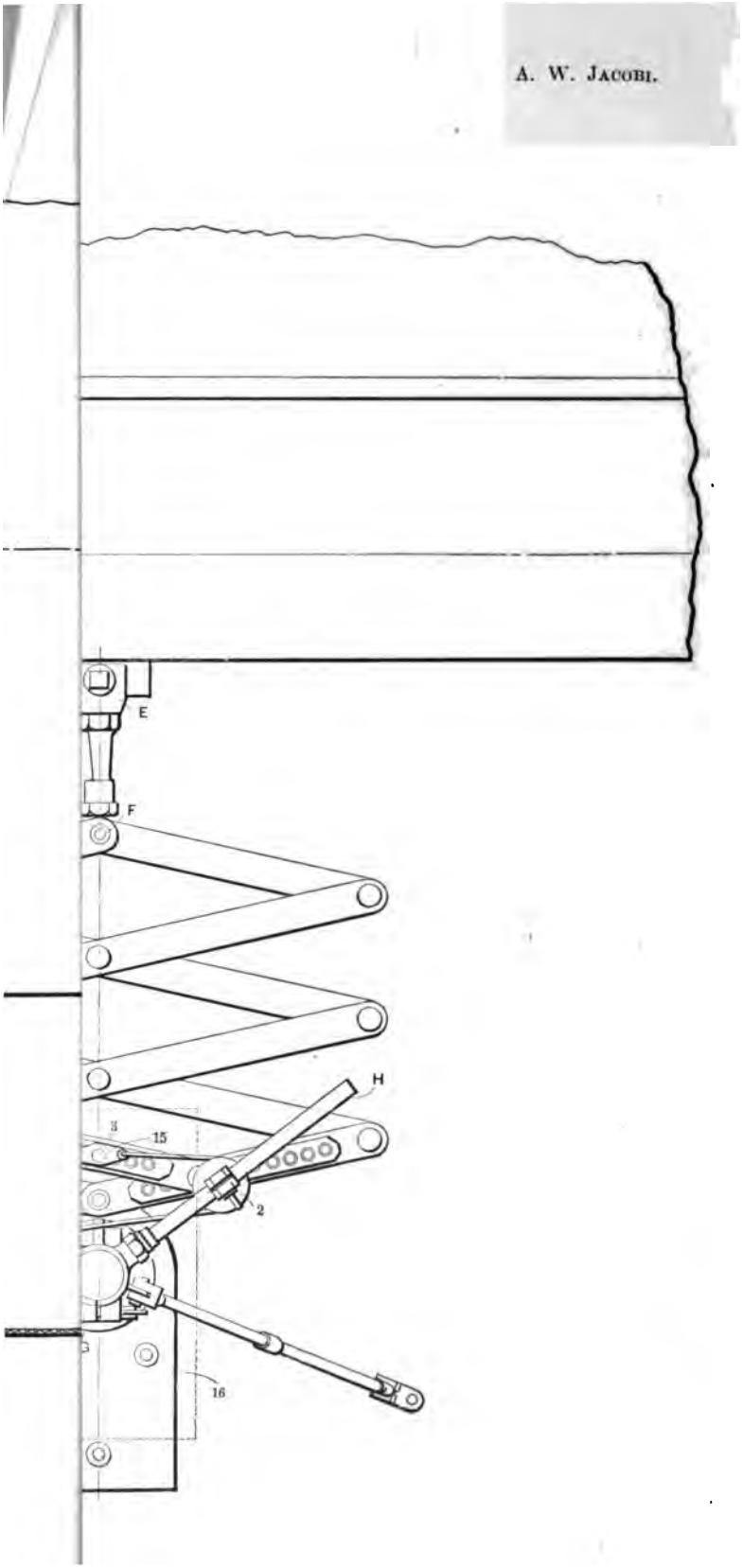

This is a very important feature, especially when the indicator is a long distance from the reducing motion. As ordinarily used, the drum spring in the indicator is called upon to operate the entire length of string on the return stroke. This is no easy task, as the string frequently passes over numerous pulleys which are not always of the finest make. The well-known pantograph is used to reduce the motion, and the writer is of the opinion that it is about the best thing in use, especially on large engines, where the speed of rotation is comparatively slow. In attaching the motion device, the stand *A* is placed in any convenient position on the floor and in front of the crosshead, about in the center of its travel, although this latter point makes no difference to the correct reduction of the motion. It will be noticed that the base of the stand *A* is made to project almost entirely on the outside of the upright. This makes it possible to place the column *A* close to a trap-door for the condenser, or to the foundation when it extends above the floor. The adjustable braces *B* are attached to a clamping collar *C* on the column *A*, and are provided at their lower ends with feet so arranged as always to present a perfect contact with the floor, without regard to the height at which the clamping collar *C* is placed on the column *A*. It will also be noticed that the braces *B* extend to one side of column *A* for the same reason as the foot, just described. The stationary end of the pantograph is held in position on the column *A* by another clamping collar *D* which is made with a hole suited to receive the pin. A clamp *E* is used on the crosshead to receive the bearing which carries the movable end of the pantograph. The manner of making this connection will be governed largely by the construction of the engine crosshead. In many cases a hole is tapped and a stud screwed into it, which serves the same purpose as the one shown. Some features of this pantograph may be of interest. At the crosshead end, instead of a regular nut being placed on the pin, a small oil-cup *F* is used, the pin being drilled down and through to the bearing. This is thought to be a very good arrangement, and is especially desirable when used on engines that cannot stop to be oiled. The holes by which adjustment is provided to the pantograph are ordinarily tapped directly into the wood, making a constant source of annoyance, as the threads

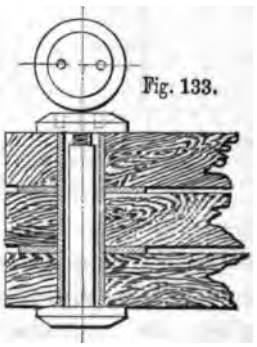

Fig. 133.

are apt to get crossed and strip. This is entirely overcome b inlaying a strip of brass, into which the holes are tapped. Th joint is illustrated by Fig. 133. This allows for taking up lo motion by filing off the bush, and also permits the bearing to t taken apart and oiled occasionally. The clamping collar *G* on th column *A*, has two arms *HH*, which carry the adjustable pulle 1 and 2. These pulleys can be placed at a position on the arm *HH*, where the cord will be led from the motion pin 3 on pant graph in a line parallel with center line of engine. In mountin the endless cord we start at the motion pin 3, pass around th pulley 1 on the arm *H*, then to the outside of the upper pulley at the front end of the low-pressure cylinder, to the upper pulle 5, at back end of the low-pressure cylinder, to the inside of th pulley 6 at the front end of the high-pressure cylinder, to the insid of the pulley 7 on the back end of the high-pressure cylinder; bac across to the lower pulley 8 at the back end of the low-pressure cyli

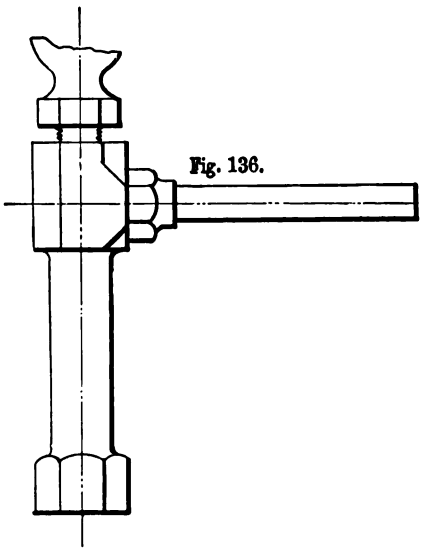

Fig. 136.

der, to the similar pulley 9 the front end of the same cy inder, then across to the pulle 2 on the arm *H*, and around the motion pin 3 on the pant graph, thus making an endle connection, which is move positively in both directions t the engine. The pulleys on th cylinders are supported by th pipes which hold the indicator Their construction will be u derstood by referring to Fig 134, 135, and 136. They a adjustable vertically and hor zontally, and are held rigidl in position by the clamps 1 shown. The small pulleys 11 are adjustable universally, an serve the double purpose of receiving the cord from the ind cator, from any position it may be found most convenient place the instrument, and of causing the motion to be take from the main endless cord parallel with its line of motio This, of course, is necessary, to give correct results. The clam 12 are shown enlarged in Fig. 137. They are provided with sm thumb-screw, and can be placed anywhere on the endle

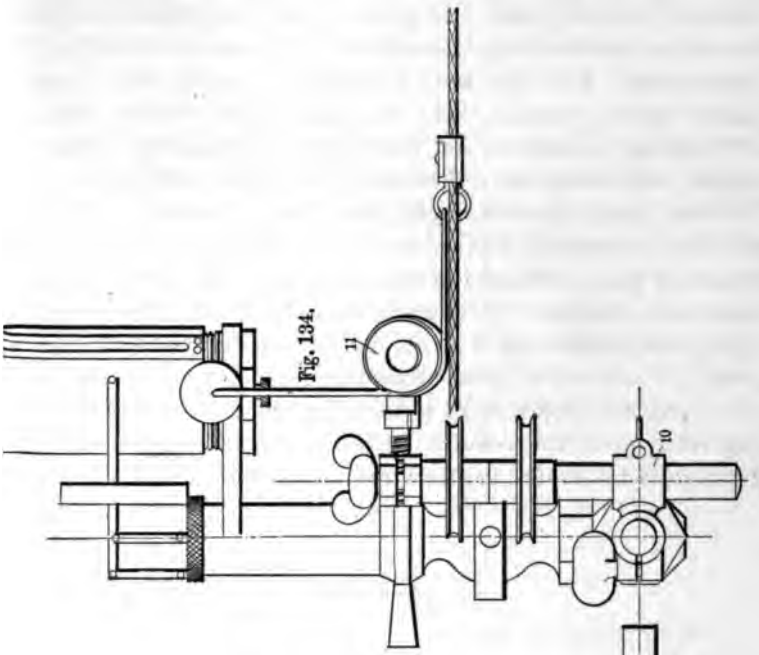

Fig. 134.

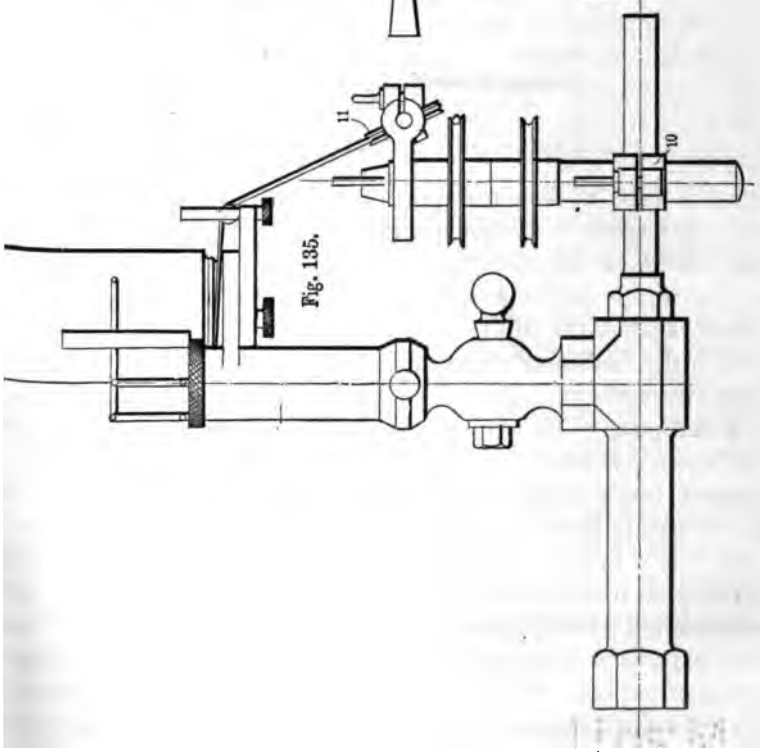

Fig. 135.

cord and securely held. In practice, they are placed close to ea indicator, thus making it possible to use a very short string to th instrument. This not only reduces the stretch, but it makes handy for the operator. He can hook and unhook the string wi out leaving his position, and when string is unhooked, it hangs a f inches only below the indicator. This keeps it off the floor, wh it is very apt to get when long strings are unhooked. The endl cord is composed of picture-cord wire, of medium size, excepti where it passes around the end pulleys, where best linen cord used, such as is sold by indicator manufacturers. The other ang being very slight, there is no danger of the wire breaking, as would if allowed to pass around the end pulleys 2 and 7. Th right and left shown at 13 is for the purpose of bringing the en less cord up to the required tension. When drawn taut there i practically no stretch to this wire; and it will be seen that although

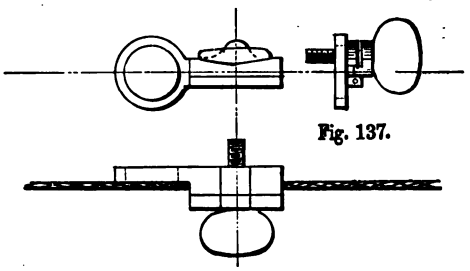

Fig. 137.

cord is used at each terminus of the endless string, any stretc that may occur to it does not in the least affect the motion to th indicators, as the cord is on the return portion of the endles string, and is not subjected to the strain caused by pulling out th drums against the full tension of the springs. The clamps, 12, int which the indicator strings are hooked, are all on the wire whic starts from the pantograph pin 3, and the cord which passes aroun the end pulley 7 at high-pressure cylinder, is connected at a poin 14 beyond clamp which operates indicator at that end. Thus it wil be seen that the strain comes entirely on the wire, and the stretc is practically done away with. The writer has seen cards take where four indicators were in operation at once, and the penci allowed to trace the cards a hundred or more times. The resul was merely a heavy line all around the card, excepting, of course, the expansion line, which must necessarily vary with changes in point of cut-off. When it is remembered that it requires a pull of from 10 to 12 pounds to operate the drum of an indicator which is

ljusted for ordinary speeds, it is apparent that this is a very good ıowing, as four indicators were used, thus making a total strain of ›rty to fifty pounds. The whole affair is rigid, has large bearing ırfaces, and is oiled throughout by means of stationary oil holes. 'he pin 3 at the pantograph is provided with a yoke 15, which can be lipped off, thus enabling the endless cord to be stopped without nterfering with the running of the pantograph. The small board 16 hown at top of column *A* serves as a writing-table, on which cards an be kept and data marked on them. An elastic band serves o keep cards from being blown off. One apparatus is made to uit both the smallest and largest engines in use, and is designed to ack into small boxes, and weighs complete, boxes and all, about 0 lbs. It has been in use about six or eight months, and is well ked by the several parties that are using it. Being nickel plated, nd the woodwork made of mahogany, it presents a handsome ppearance. The inventor has applied for letters patent.

DISCUSSION.

The President, H. R. Towne.—I presume it is a novel feature to ave a device by which the four ends of a compound engine can e indicated simultaneously, which I take it is the point of the evice described.

Mr. F. H. Ball.—I would like to ask the author of the paper t what speeds he has used this apparatus. I was always of the pinion that this pantograph was not suited to high speed. I hought perhaps this was adapted only to moderate speeds, say, ot over 100 revolutions.

Mr. Jacobi.—Mr. Ball is quite right in regard to the speed at which the pantograph can be used, as I have never used it at a greater speed than he mentions.

While I have never had occasion to use this device on high-speed engines, I see no reason why it should not give good results.

It is not absolutely necessary that the pantograph be used for reducing the motion, as the device can be made to work equally well if operated by a lever or pendulum, as commonly used in connection with high-speed engines.

CCCXL.

THE PIPING OF STEEL INGOTS.

BY THOMAS S. CRANE, NEWARK, N. J.
(Member of the Society.)

THE interesting discussion at the last meeting relative to cracks arising in the hardening of steel articles suggested to the writer that it was probable that many of the cracks arose from a cause not referred to at all.

The cast-steel ingots ordinarily made have a serious defect termed a pipe, at the upper end, which is shown in the annexed Fig. 138, photographed from an ingot cut open to expose the pipe.

No subsequent working of the ingot serves wholly to unite the walls of this pipe, as they become quickly oxidized by exposure to the air, and no reheating suffices to make them weld thoroughly together.

Every bar of cast steel formed from such an ingot, therefore, has a defect at one end, which it is common to remove by breaking off the bar in successive sections, until careful inspection shows that the defective part is removed.

Inspection is not, however, capable always of preventing the steel from passing into the market with a portion of such defect, and the defective spot in the steel may, in the subsequent working, find its position at the top, bottom, side, or interior of a tap, gauge, reamer, or other tool, and develop a crack of some inexplicable character when the steel is hardened.

Strenuous efforts have been made, and by many different modes, to prevent the piping of cast-steel ingots, but it is only recently that a simple apparatus has been perfected for practically accomplishing this object, and it is reasonable to suppose that the use of ingots formed entirely free from piping will, in many cases, prevent the cracking of the steel when hardened.

Before referring to this apparatus, I will mention briefly the most modern means heretofore used.

The "Sweet" process consists in putting powdered charcoal upon the top of the ingot when poured, to prevent its upper end from oxidation, and, by its combustion, to maintain the fluidity of the steel, and thus assist in filling the pipe as it forms. The entire effect is very slight.

The compression process used by Whitworth to form sound steel ingots has never been wholly successful, as it operated to consolidate the exterior of the casting without permitting the free discharge of the gases from its interior; and while it has operated to prevent the formation of a pipe or local depression, it has been liable to produce a spongy or porous casting. Various modifications of Whitworth's plan have been devised.

S. T. Williams has devised a compression process for making sound circular ingots for saw plates.

The comparatively thin and flat form of such ingots permits the sides to be bent or crushed inward while the interior of the ingot is still at a welding heat, and this effects the desired purpose much better than in a square ingot, where the compression of the sides would tend to induce cracks, as the metal, when first crystallized, is not very tenacious.

The "Billings" process for compressing steel ingots was intended to apply the pressure instantly when the casting was formed, but operated only to lock the gases within the ingot.

In experiments tried by William R. Hinsdale, at the Jersey City Steel Works, in the year 1884, it was found that a pressure of 300 pounds per square inch, operating upon a 24-inch piston, and concentrated upon the end of a 3½-inch-square ingot, merely produced an ingot containing innumerable globules of gas.

FIG. 138.

If the pressure was deferred until the ingot slightly hardened, a pipe would form in the ingot at the upper end, and would remain permanently, as the hardening would prevent the pressure from operating effectively.

The "Billings" and "Hinsdale" process provided a reservoir at the top of the mould, and a movable plunger within the mould, by

which the steel was drawn downward to make an ingot, whi
would be fed, during the shrinkage period, by the residue remai
ing in the reservoir. This process is not, therefore, convenient exce
for the casting of large ingots.

Mr. Hinsdale also experimented at the Jersey City Steel Wor

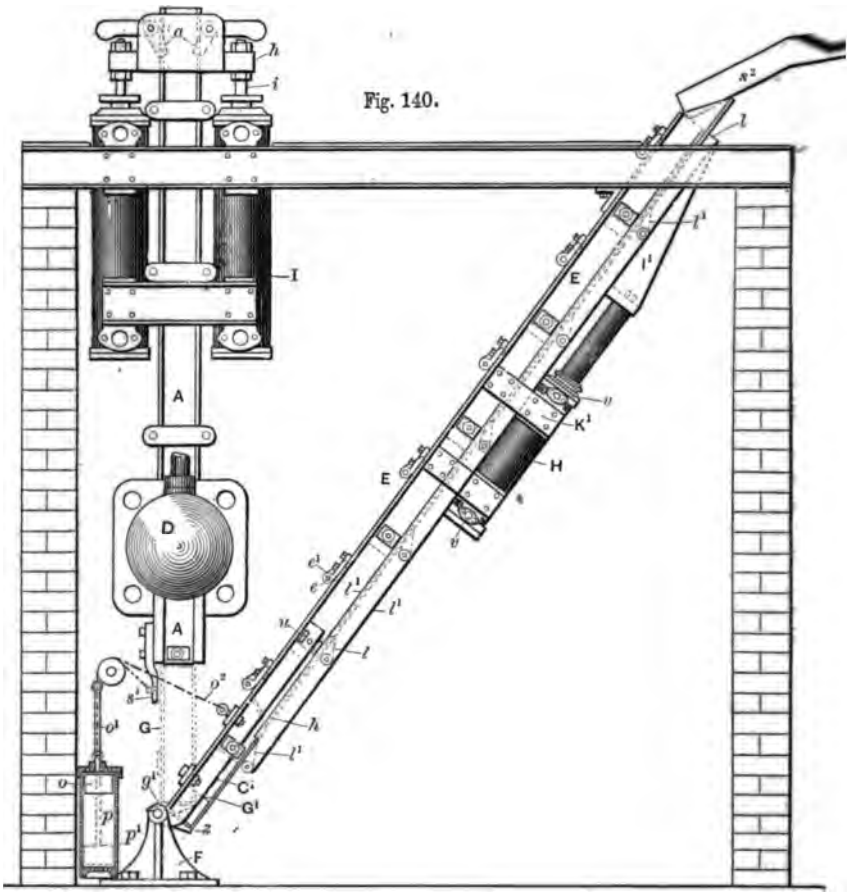

with a pressure of 60,000 pounds per square inch upon the metal, applied to the end of a $3\frac{1}{2}$-inch-square ingot,—nearly double the pressure ever applied by Sir Joseph Whitworth.

The result was the shortening of the ingot from 25 to 22 inches in length, and perfect solidity except that the pipe appeared in the same form, a flaw, as it ordinarily displays itself at the piped end of a forged bar.

Mr. Hinsdale thus found that piping, or its effects, could not be eliminated by pressure, and invented a perforated plug to insert in the mould upon the top of the fluid metal, through the perforation in which the gases might escape while applying the pressure.

With this device the top of the ingot became slightly chilled, and a crust formed thereon; but after the pressure upon the metal was raised to about 20,000 pounds per square inch, the crust of metal exploded with a loud report, and a circular piece like a boiler punching shot out of the perforation in the plunger, followed by all the gases, and sufficient metal to fill the cavity and form a stud as long as one's little finger, on top of the ingot.

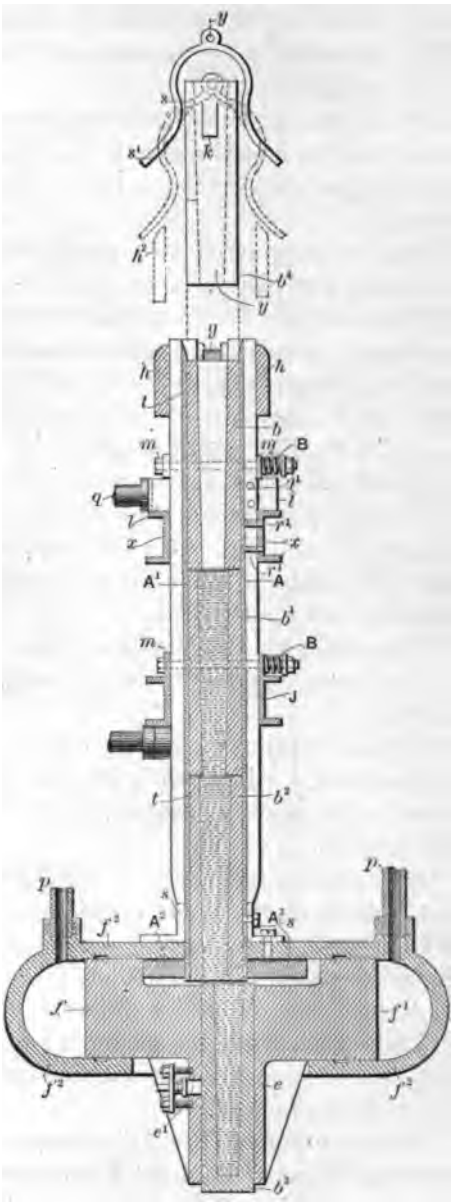

Fig. 141.

This process produced ingots absolutely solid and free from defect, which had been proved impossible by the mere use of pressure. The expense of all these methods, and the inconvenience of applying them to the open ingot moulds universally used for casting steel ingots, resulted in the invention, by Mr. J. B. D'A. Boulton, of Jersey City, N. J., of an apparatus in which ingot moulds made without bottom, but in other respects like the common ingot moulds, are superposed one upon another, and successively filled, the shrinkage in each ingot being fed by the fluid metal

in that above it, and the resulting product being a series of absolutely sound ingots connected by cold-shut joints.

An ingot made by this process, and split open, has been shown to be perfectly sound.

By interposing an asbestos washer with a small aperture, between the successive mould sections, the resulting product was necked at intervals, so that the ingot bar could be readily broken at such points.

Boulton's apparatus, now manufactured by the Solid Ingot Co., of Jersey City, N. J., is shown in Figs. 140 to 147 inclusive, Fig. 140 representing the apparatus mounted over a pit, with a hydraulic elevator to raise the ingots to the floor level; Fig. 141, a vertical section through the cylinder, D, in Fig. 140, and the parts above it; Fig. 142, an elevation of the elevator at right angles to that shown in Fig. 140; Fig. 143, a longitudinal section on the centre line of Fig. 142; Fig. 144, a transverse section on line *xx* in Fig. 143; Fig. 145, a plan or end view of the elevator; Fig. 146, a plan of one mould; and Fig. 147, a side view of the same showing notches *k* and *j*, by means of which the mould is propelled through the casting machine and the elevator.

The apparatus consists in a spring holder made of two I-beams A, A^1, pressed together by tie-bolts *m*, provided with springs *B* (Fig. 141).

Hydraulic cylinders *I* are provided with piston rods *i* to actuate a cross-head *h*, which encircles the top of the holder, and is provided with pawls *a*, adapted to fit the notches *i* in the sides of the moulds.

A transverse cylinder (D, Fig. 140; f^2, Fig. 141) is applied to the bottom of the holder, and contains a piston f, f^1, provided with a pocket *e* to receive the moulds in succession, as they are forced downward in the holder.

A spring dog e^1 sustains the weight of the mould and its contents in the pocket, while the piston is moved laterally, as shown in Fig. 141, and the ingot, while still red-hot, is thus sheared off at the joint of two moulds.

A spring tongs s^1 (Fig. 141) is used to set the moulds in the holder, and the lifting of the head *h* separates the extremities of the tongs and detaches them from the mould. After the pawls *a* have engaged the notches *k*, the head is moved downward, and forces the mould within the holder into position for filling, as shown in Fig. 143.

The apparatus is used by first inserting in the top of the holder

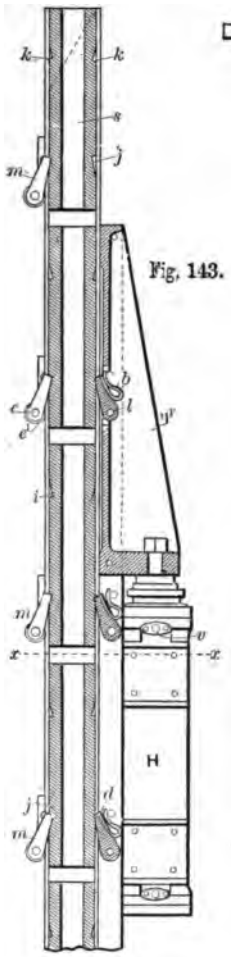

Fig. 143.

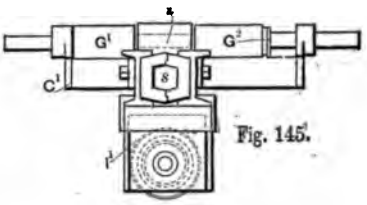

Fig. 145.

Fig. 146.

Fig. 147.

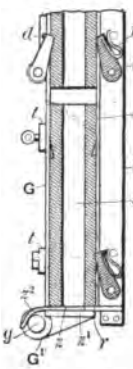

g. 144.

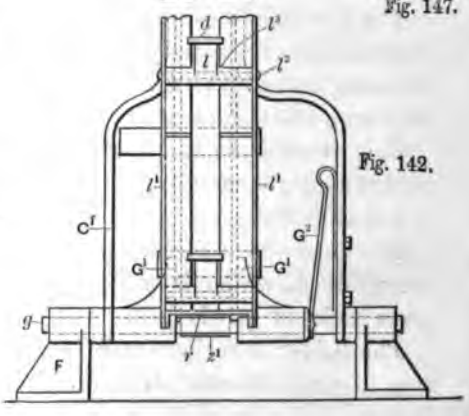

Fig. 142.

a mould with a bottom (like that at b^3 in the pocket e, in Fig. 141).

When filled, another mould is superposed in like manner, and the head h and pawls a again reciprocated to draw it downward, thus forcing the filled mould farther down in the holder.

When several moulds have been filled, the first mould, contained in the pocket e, is shifted transversely by reciprocating the piston f, f^1; and, the pocket being restored to a line with the holder, the subsequent downward movement of the moulds within the holder discharges the severed mold and its contained ingot from the machine.

The hydraulic pistons are governed by valves shifted by hand levers not shown in the drawing; and the motions of the several parts are thus effected with great ease and rapidity. In practice, a cycle of the required movement can be performed in much less than a minute, while it is found that such an interval is required to fill each mould and cool the ingot to the desired degree by the time they reach the shearing pocket e.

The moulds, being formed in longitudinal halves, as shown in Figs. 146 and 147, are readily separated from the castings, which, owing to the perfect feeding of the shrinkage in the progress of the moulds through the machine, are absolutely sound and free from piping, and the cast steel is of high density throughout.

The gases are also fully discharged from the fluid metal, as their free escape from the top of the metal is always possible.

In most instances the machine may be set at such a level as to discharge the ingots at a convenient point for subsequent working; but where it is desirable to raise the ingots to the level of the casting floor, the elevator shown in the figures may be used.

The elevator is arranged in an inclined position, with its lower end beneath the casting machine, to receive the moulds and their contents, and to intermittently raise the same through a guide E, to discharge the moulds s^2 at the top.

This is effected by providing a box G, pivoted at one side and held vertical, when empty, by a counterbalance weight p, operating in a dash pot o.

The entrance of the mould into the box G tips the box over into the guide E, which is provided with a ladder-like frame l^1, carrying a series of pawls l.

The ladder is reciprocated by the hydraulic cylinder H, and operates to push the moulds intermittingly upward within the holder.

Pawls *m* are provided to hold moulds, when the ladder l^1 is moved downward for the pawls *l* to engage another mould.

Boulton's apparatus has been in commercial operation at the West Bergen steel works of Messrs. Spaulding & Jennings, since December, 1887, and one ingot per minute is cast in it regularly when the heat is ready.

The ingots cast are nearly four inches square, and are absolutely sound; but the machine is equally adapted to cast larger ingots by making the holder and the ingot moulds of suitable dimensions. One man suffices to operate the levers of the hydraulic apparatus, and the ordinary operators are employed to pour the metal.

The whole operation of forming the ingots is so similar to the use of ordinary moulds that no training is needed to use the machine, and it may therefore be regarded as practically perfect.

DISCUSSION.

The President.—The device described in the paper just read is certainly a most simple means of accomplishing the desired effect, and it is apparently very successful. The trouble has been a serious one, and I should imagine that the adoption of this method would conduce to a considerable economy in the use of ingot steel.

CCCXLI.

GAIN-SHARING.

BY HENRY R. TOWNE, STAMFORD, CONN.
(Member of the Society.)

WEBSTER defines *profit* as *the excess of value over cost*, and *gain* as meaning *that which is obtained as an advantage.* I have availed of this well-expressed though delicate distinction between the two terms, to coin a name for the system herein described, whereby to differentiate it from profit-sharing as ordinarily understood and practised.

Profit-sharing, as the term is now commonly used, implies a voluntary agreement, on the part of the principal in a business, to set aside some portion of the profits of his business for division among all or certain of his employees, as a stimulus to their zeal and industry. Thus understood, profit-sharing involves the participation of the employee in all the complex factors that affect the final result, or profit, of a business, including necessarily its *losses*, since these tend to impair, or may even extinguish, the profit. He thus becomes practically a partner, except that his participation in losses is limited to the surrender of his share in anticipated profits, and does not involve any impairment of his personal capital.

It follows, therefore, in most cases of profit-sharing, that the interest of each participator in the profit fund is largely affected by the actions of others whom he cannot control or influence, and that what he may earn or save for the common good may be lost by the mismanagement or extravagance of others. For example, let us suppose the case of a trader who buys and sells a certain staple, such as cotton, and who, having two clerks, entrusts to one of them the purchasing of the staple, and to the other the business of selling it to the customers of the house. Obviously here the amount of profit will depend partly upon the ability of the buyer to purchase material of the proper quality at the lowest market rate, and partly upon the ability of the seller to dispose of it promptly at the highest obtainable prices. If each does his share

well, a large profit may result; while if either fails in his part there may be no profit, or even a loss, no matter how well the other may have performed his part. But it does not follow that the work of either or both will determine the question of profit, for unexpected changes in the market may neutralize the best plans and cause loss, or may result in large profit in spite of unskilful management.

Let us now suppose the case of a manufacturer who, in addition to buying the raw material, converts it into a finished product before selling it, and who voluntarily concedes to the operatives of the manufacturing department of his business, as well as to his chief assistants, a participation in its profits. The factors affecting the profit fund now become more complex, and may be divided into several distinct groups, as follows:

1. Those contributed or controlled by the owner or principal,—such as capital, plant, character of buildings, machinery and organization; and, to a greater or less degree, the skill, experience, industry, and ability of the owner so far as he personally manages the business.

2. Those influenced by the mercantile staff,—the buyer and the selling agent in the case supposed.

3. Those determined by causes beyond the control of the principal and his agents; such as fluctuations in cost of raw material or in the market value of the finished product, the rate of interest, losses by bad debts, etc.

4. Those influenced by the workmen or operatives; such as care of property, economy in the use of material and supplies, and, chiefly, efficiency in the use of machinery and employment of labor.

Now it is obvious that while the operatives may influence the items in the fourth or last group to an extent which may be large, or even controlling, in determining the question of profit or loss, they have little control—and in most cases none whatever—over the items specified in the other three groups; and that to admit them to participation in the net results of the whole business, while commendable as an act of generosity, is not defensible either as an equitable adjustment of the complex and often conflicting interests involved, nor as a theoretically correct solution of an economic problem.

The right solution of this problem will manifestly consist in allotting to each member of the organization an interest in that portion of the profit fund which is or may be affected by his individual efforts or skill, and in protecting this interest against

diminution resulting from the errors of others, or from extraneous causes not under his control. Such a solution, while not simple, is attainable under many circumstances, and attainable by methods which experience has shown to be both practical and successful.

This resolution of the profit fund into component parts obviates many of the crudities in, and objections to, profit-sharing in its common form, but still leaves untouched another feature which is wrong in theory and often objectionable in practice, namely, the surrender by the principal of any portion of his legitimate profits without the assurance of an equivalent return from those on whom he bestows it. This, as said above, may be commendable as an act of charity, but as a solution of the problem in question it is neither complete nor accurate. Moreover, mere charity to those who do not need it is a doubtful good, and among intelligent and self-respecting men is not always relished. Certainly the problem we are considering will be best solved if it can be so formulated that the element of gratuity or charity, of giving without tangible consideration, can be eliminated, and that, as presented to the employee, it becomes an invitation from the principal that they should enter into an industrial partnership, wherein each will retain, unimpaired, his existing equitable rights, but will share with the other the benefits, if any are realized, of certain new contributions made by each to the common interest. For example, to recur to our former case, let us suppose that the wages of the operatives are already fairly adjusted according to the prevailing scale, so that for the employer to offer them a portion of his profits without a guaranty of return would be equivalent to his giving them more than the fair market value of their services; while if, under this inducement, they gave him better or more work than before, they would not receive fair recompense in case, by reason of causes beyond their control, his business yielded no profit. But let us suppose, further, that the principal, wishing to enlist the self-interest of his employees to augment the profits of the business, should offer to the operatives a proposition somewhat as follows:

"I have already ascertained the cost of our product in labor, supplies, economy of material, and such other items as you can influence. I will undertake to organize and pay for a system whereby the cost of product in these same items will be periodically ascertained, and will agree to divide among you a certain portion (retaining myself the remainder) of any gain, or reduction of cost, which

you may effect by reason of increased efficiency of labor, or increased economy in the use of material, or both; this arrangement not to disturb your rates of wages, which are to continue, as at present, those generally paid for similar services."

Can there be any question as to the inherent fairness and accuracy of this solution of our problem, or any doubt as to its cheerful acceptance by intelligent labor? As to the latter point an emphatic answer has already been given by actual experience; as to the former a reply will be attempted in what follows.

The system for which I have adopted the designation of "Gain-sharing" aims to recognize and provide for the conditions typified by the foregoing supposititious case, and to afford a basis for allotting to the employees in a business a share in the gain or benefit accruing from their own efforts, without involving in the account the general profits or losses of the business. The system is now in actual use as affecting some 300 employees, has been in operation more than two years, and is demonstrated to be practical and beneficial. It has been applied to nearly one half the divisions of a large and unusually varied industry, and will ultimately be extended to nearly all. As soon as understood by the employees, it is liked, and those not working under it in the instance referred to are desirous that it should be extended to include them. Its most obvious application is to productive industries, especially those whose product is of a simple or uniform kind; but it may be adapted to many others, and also to the business of large mercantile houses. It is equally applicable to cases where labor is employed either by the piece, by the day, or by contract, and in no way impairs the existing freedom of the relation between employer and employee, but tends to confer substantial benefit on both sides.

The basis or starting-point of the system is an accurate knowledge of the present cost of product (or, in the case of a mercantile business, the cost of operating it), stated in terms which include the desired factors, that is, those which can be influenced or controlled by the employees who are to participate in the result, and which exclude all other factors. In some cases the previous method of accounting or book-keeping may have been such as to supply this information, in which case the gain-sharing system can be easily and promptly organized. In others the existing books may contain the record from which the desired information can be digested and compiled. Where no such record exists, however, the only safe method consists in devising and putting into action a system of

accounts which will furnish the desired *data*, and in awaiting the accumulation thereby of information which, being based upon the operations of a reasonably long period,—usually from six to twelve months,—will constitute a fair mean or average.

The factors which should be included in, and those which should be excluded from, the account, will vary with circumstances, each particular case having to be considered by itself. As a general rule it may be stated that, in the case of an account affecting the operatives in a producing or manufacturing business, the following items should be *included*, viz.: labor at cost, raw material, measured by quantity only (for which purpose an arbitrary fixed price may be assumed); incidental supplies, such as oil, waste, tools and implements, at cost; cost of power, light, and water, where means exist for correctly measuring them (for which purpose it often pays to provide local meters); cost of renewals and repairs of plant; and, finally, the cost of superintendence, clerk hire, etc., incident to the department covered by the system. In like manner the following items should be *excluded*, viz.: market values of raw material (which are liable to fluctuation); general expenses, whether relating to management of works or to commercial administration, and, in general, all items over which the operatives can exercise no control or economy. Finally, the credit side of the account should be determined by the amount or volume of product measured by a scale of values fixed in advance, and based upon facts previously ascertained. For example, if, in a given case, it has been determined by the experience of several years that the present cost of product, measured by such items as are covered by the inclusive list above stated, is, say, one dollar ($1) per unit of product, then the gain-sharing proposition might be formulated as follows: the principal would say to the employees, in substance, "I will organize the system, will assume the cost of book-keeping and other expenses incident to it, and will provide all the facilities reasonably required to assist you in reducing the cost of product; I will credit the account with the output at the cost price heretofore obtaining, namely $1 per unit, and will charge it with the items in the inclusive list; if at the end of the year the credits exceed the charges, I will divide the resulting *gain*, or reduction in cost, with you, retaining myself one portion,—say one half,—and distributing the other portion among you *pro rata* on the basis of the wages earned by each during the year." Supposing, then, that at the end of the year it was found that the cost per unit of product had been reduced

from $1 to 95 cents, that the total gain thus resulting was $800; and that the aggregate wages paid during the year had been $10,000. One-half of the gain would be $400, which would equal 4 per cent. on the wages fund, so that each operative would be entitled to a dividend of 4 per cent. on his earnings during the year. This is equivalent to two weeks' extra wages, no mean addition to any income, and amounting, even in the case of a laborer earning $1.50 per day, to a cash dividend of $18 at the end of the year.

In the practical application of the system several important details have to be determined, for which no general rule can be laid down. Of these the most important is the question of the division of the gain or profit between employer and employees. In each of the twenty-one gain-sharing contracts which I have thus far instituted, it has seemed proper to make this division an equal one,—one-half to the principal and one-half to the operatives,—and the results thus far have justified the rule and proved generally satisfactory to both parties to the contract. Obviously, however, different circumstances may justify or require a different basis of division.

Another important question is the share of the profit fund or gain apportioned to the foreman, overseer, or contractor having immediate control of the operatives interested under the system. Where such person is employed under salary he may share *pro rata* with the operatives, but as this would tend to diminish his share with any increase of responsibility due to the need of an increased number of subordinates, I prefer to allot to him a definite part of the profit fund. Assuming fifty to be the average number of employees under one foreman, I regard ten to fifteen per cent of the profit fund as about the proper allotment to the foreman, leaving forty to thirty-five per cent for his subordinates, where fifty per cent is retained by the employer.

As the foreman has more power and control than any subordinate, it is proper that his interest should be larger, and it is expedient, also, in adjusting his total compensation, to make a considerable fraction of it contingent upon the results of his work. Where the "contract system" of work prevails, I have adopted the rule of paying the contractor, like his helpers, by the hour; his "basis rate," or rate per hour, being determined by adding together the three following factors, viz.: (1) his value as a workman, usually that of his best helpers; (2) one half cent per hour for each completed year of service as contractor, in recognition of increased

value due to experience; and (3) a figure representing a very small but definite percentage on the aggregate amount of his contract earnings, in recognition of the fact that his responsibility varies somewhat with the volume of work under his control. The first of these items is usually constant; the second causes a slight annual increase in the "basis rate;" while the third tends to increase the rate when the volume of business is large, and to reduce it when business falls off. The percentage of the profit fund or "gain" allotted to a contractor may be larger, proportionately, than to a salaried foreman, depending upon his duties, his liability for quality of product, and the amount of his "basis rate" or hourly wages. As in the former case, however, it is desirable that a considerable fraction of his total compensation should be derived from the profit fund, and thus be contingent upon the results of his work.

A third point to be considered is the basis of participation on which the dividend to the operatives shall be apportioned among them. The simplest plan, and the one which I have adopted in practice, is to distribute the total profit fund allotted to the operatives on the basis of the actual wages earned by each during the year, including in the account everyone employed during that time, even if for one day only. If a dividend is earned it is not payable until the year is closed, when it is paid in cash, in the same manner as the regular wages, but enclosed in a special "dividend envelope," on which is stated the total annual wages of the recipient, and the rate and amount of his dividend. The rules should provide for the disposition of unclaimed dividends, which may very properly go into the treasury of a mutual benefit fund, if such an organization exists, and should also be carefully framed with reference to local laws, in order to avoid unforeseen liabilities and complications.

It has been found feasible, and very beneficial, to have posted in each room or department where the gain-sharing system is in force, a suitable blank, preferably under glass, on which can be entered each month the net results of the system during the preceding month, and including a statement of the *rate* of dividend earned since the beginning of the contract year. The stimulus thus given to the interest of the employees is very marked.

Another point of much importance is the question of the length of time during which a contract for "gain-sharing" shall continue without modification. Its inception is voluntary with the employer, and he may impose on the contract any conditions he sees fit, since

its whole purport is to tender to the employee an interest in excess of his stipulated wages, from which it is expected that he will gain an increase of his compensation, but under which he cannot possibly suffer loss. Such a contract, however, when once definitely entered into, is, like other contracts, only amenable to revision by the joint consent of both parties to it. It is important, therefore, that its provisions be carefully considered in advance.

The length of time which it is desirable to adopt for a gain-sharing contract depends greatly upon the conditions of the case. As already explained, the starting-point of the system is a knowledge of the previous *cost of product*, the "gain" or increased economy in this constituting the fund out of which the increased compensation to labor is to be paid. When, therefore, the cost of product is already accurately known, a gain-sharing contract may safely be made for a considerable length of time, whereas, when the cost is not well known, it is better to fix its terms for a shorter period, in order that they may be revised when the necessary information has been obtained. The best results will be obtained, however, when the contract is definitely fixed for a reasonably long period, say from three to five years, or even longer. A necessary element in the case is the adoption of a "contract price" for each article to be produced, by which, as previously explained, the credit side of the account may be determined. At the beginning of a contract the employer obviously has the right to adopt whatever "contract prices" he pleases, since their purpose is merely to serve as a basis from which to compute the "gain" in which he voluntarily tenders participation to the employees, and since the contract does not diminish the obligation of the employer to pay each employee his stipulated wages. Presumably the employer will adopt reasonably low contract prices, that is, closely approximating to previous cost; because to do otherwise would be prejudicial to his own interests, although to fix them on too low a scale would defeat the object of the system by leaving no opportunity for "gain," and hence no stimulus to increased efficiency of the employee. In like manner, at the expiration of a contract, the option and right reverts to the employer of revising the "contract prices" before offering a renewal of the contract; in which event, if during the previous term the cost of product has been considerably reduced, he will presumably (although this is not always the wisest course) proportionately reduce the contract prices. If, therefore, the contract period be short, the employee will naturally ask himself whether it

is to his interest, for the sake of a small increase of compensation during that period, to make increased exertion in view of the fact that, at the end of the period, the employer will probably again reduce prices to a point where, in order to increase his earnings, the employee would have to exert himself even more than at first. If, however, the contract price be definitely fixed for a long period, the employee can afford, for the sake of present gain, to disregard this question as one only affecting a somewhat remote future, and to use his best efforts and intelligence to effect a reduction in the cost of product. As a result of this the employer will be able, when the opportunity for a revision of prices arises, to make a larger reduction than he would probably attain in the same time under the plan of frequent revisions, and can also then afford to act more liberally toward the employees in the matter. In my judgment, therefore, both parties will usually be benefited by having a long contract period in all cases where the previous cost of product is well known, and where no radical change of product or methods is likely to occur.

The simplest application of the gain-sharing system is to cases where work has already been done by contract,—that is, where one person, employed for the purpose, is paid for the finished product *by the piece*, the wages of his helpers being charged against his account; and it can be readily organized in any case where the nature of the product is such as to adapt it to being thus done "by contract." In this connection it is proper to note that the contract method, whether under the gain-sharing system or not, is entirely compatible with "piece-work," that is, an arrangement whereby each operative is paid for his individual product by the piece instead of by day's wages. In this case the amount of piece-work earnings is charged against the contract account in the same manner as the wages of persons employed by the day or hour, and is treated in the same manner as other earnings in computing the dividend of each operative under a gain-sharing contract. In corroboration of this statement I may mention that I have already adopted gain-sharing in several cases where the work was previously and is still done under the "contract" system, and in which, also, the piece-work system has since been largely applied. We thus have the three systems of gain-sharing, contract-work, and piece-work, all co-existing harmoniously, and all contributing to a common result.

Again, in the case of a foundry, the gain-sharing system can be

easily and advantageously applied. Here economy of material as well as efficiency of labor is largely under control of the operatives, and should be made a factor in the account. This can be accomplished by basing the "cost of product" upon the ascertained results of a previous period, labor and miscellaneous items of small supplies being charged up at actual cost, and fuel and metal being charged according to an arbitrary scale of fixed prices, which may conveniently be determined by adopting the average market rate during the previous year, or at its close. The arbitrary values for material which are thus adopted are then incorporated in the gain-sharing contract, and remain unchanged during its period. The "contract prices" for finished product are deduced from the actual results of the preliminary period, the cost of material being calculated by extending the actual quantities at the arbitrary prices per pound or other unit which may have been adopted for the proposed contract, the employer using his discretion as to how close the contract prices should be to previous actual costs. Where the foundry product is of varied character, a separate price is fixed for each class of castings, and a record kept of the output of each.

Gain-sharing may thus be adapted to industries of almost any kind in which it is feasible, by reasonable expenditure, to differentiate those elements of cost which can be influenced by the persons who are to participate in the resulting gain from those which are beyond such influence or control. Careful and intelligent consideration must be given to properly adapting the system to the varied circumstances and details of each case; and the experience of several renewals of a gain-sharing contract, each accompanied by the modifications and improvements which are the outcome of experience, may be needed to attain the highest results. In my own experience I have failed, in a few cases, properly to adjust the conditions, and hence have seen the first year close with an apparent loss instead of a gain. In such cases a careful analysis of the operations of the year will usually explain the cause of disappointment and indicate the remedy. The first year of a contract for gain-sharing is apt to be disappointing to its promoter, owing to lack of interest, faith, and comprehension on the part of the employees. These all vanish, however, under the convincing argument of a *cash dividend*, and after the first of these has been paid there is usually a marked increase of interest in the plan.

Appended hereto are several papers illustrative of the working of the system in actual practice. The first of these—Appendix A—

gives the results obtained in the case of a number of the contracts to which I have applied the gain-sharing system, two of these covering a period of two years each. All of the others are now running on the second year, but only the results of the first year are here stated. The "contract prices" adopted for these gain-sharing accounts were in some cases the actual previous costs, but in a majority of cases the contract prices were fixed at rates which were a reduction of from ten to twenty per cent., and in one case of thirty per cent. from previous costs. These reductions were made advisedly, and only in cases where there was good reason to believe that increased effort would result in very considerable reductions of costs. In most cases the results have justified the reductions, and even on the basis of the new prices the contracts have yielded fair profits or dividends.

Appendix B is a transcript of one of the monthly exhibits mentioned above as being posted in the room or shop where the system is in force. These figures were inserted in the blank, month by month during the year, and gave information to the employees of the results of their work as affecting their interests under the gain-sharing contract. In this case the proportion of gain allotted to helpers was twenty-five per cent., and the net result of the operations for the year yielded a dividend to them of 5.7 per cent. on their wages or earnings during the year.

Appendix C shows the rules governing the application of the gain-sharing system to the iron foundry in the works of the Yale & Towne Manufacturing Company, at Stamford, Connecticut. Where the system is applied to a shop or department in which contract work obtains, the rules require modification in certain details, but are substantially the same in principle as those given herewith. In all cases the rules will require careful adaptation to the details of the particular work to which they relate, and to the methods of shop management and organization which are in use.

APPENDIX A.

ntract No.	Term.	Helpers' e rnings.	Gain or loss.	Helpers' share.	Rate of dividend.
1	5 years.	$13,080 43	$3,388 53	$850 18	.065 %
2	5 "	9,216 87	* 37 59	. . .	. . .
3	5 "	3,666 34	840 05	208 98	.057 %
4	3 "	4,936 54	573 58	148 09	.03 %
5	5 "	910 22	* 48 52	. . .	. . .
7	3 "	3,861 28	537 72	134 43	.035 %
8	3 "	1,012 92	447 59	111 42	.11 %
9	3 "	419 55	109 04	27 27	.065 %
10	5 "	17,696 47	1,256 37	318 53	.018 %
15	5 "	728 53	358 20	89 62	.123 %
		SECOND YEAR.			
1		$14,096 05	$3,251 04	$817 56	.058 %
3		3,732 21	1,027 20	261 15	.07 %

* Losses.

APPENDIX B.

The Yale & Towne Manufacturing Co.

Monthly Accounts Relating to Contract No. 3—1887.

Months.	Total profit for month.	Profits from beginning of year.			Monthly charges for tools.	Monthly charges for supplies.
		Total amount.	25% belonging to helpers.	Percentage on wages.		
uary	* $45 52				$55 84	$3 95
ruary	85 72	$40 20	$10 05	.017	46 85	2 97
ch	115 53	155 73	38 93	.039	78 13	7 62
il	98 48	254 21	63 55	.046	35 57	5 98
	* 51 46	202 75	50 69	.0307	37 16	1 75
e	182 90	385 65	96 41	.0505	26 66	2 04
	9 12	394 77	98 69	.046	17 25	2 74
ust	76 12	470 89	117 72	.049	27 10	2 02
tember	8 64	479 53	119 88	.044	44 20	3 14
ber	114 76	594 29	148 57	.0499	56 96	6 27
ember	* 94 72	499 57	124 89	.0378	58 30	75
ember	340 48	840 05	210 01	.057	27 30	4 56
ls for Year	$840 05	$840 05	$210 00	.057	$5 1 32	$43 79

* Losses.

APPENDIX C.

The Yale & Towne Mfg. Company, Stamford, Conn. Rules for "Gain-sharing" System in Iron Foundry, December, 1887.

1.—Contract Period.

The present contract between the company and the employees of the Foundry will cover a period from December 1st, 1887, to December 1st, 1888, and will be subject to revision after the latter date.

2.—The System.

The "gain-sharing" system has been in operation during 1887 throughout the greater part of Dept. A, where some 200 men are now at work under it. Its essential principle is this: that out of each $100 of savings or "gain" in the cost of product, in labor and supplies, the Company retains only $50, the other $50 being divided among the employees in the Department. To accomplish this the Company agrees to organize the method of operation, to keep the necessary accounts, and in general to facilitate matters so far as it reasonably can; the employees, on the other hand, agree to use their best efforts to increase the efficiency of their work, to economize in the use of supplies and material, and in general to do their share towards reducing the cost of finished products.

3.—Contract Prices.

To establish a basis by which to measure the saving or gain effected, the following plan has been adopted. The average prices for metal and fuel which prevailed during the past six months have been carefully ascertained, and these prices have been adopted for the contract period; applying these prices to the product of the Foundry for the past six months, all other items of labor and supplies being extended at their actual amounts, the cost per pound of castings of each class during the past six months has been ascertained; the prices thus ascertained are adopted as the *basis prices* for the contract period.

4.—Contract Profit or Gain.

At the close of each month of the contract period the cost of castings produced during the month will be ascertained by charging up the metal and fuel at the *fixed prices* adopted as

above, and charging all other items, including wages and supplies, at actual cost. If the cost of castings thus ascertained is less than the *basis cost* determined as above, the difference between the two will be the saving or gain for the month. The results of each month's operations will be posted in the Foundry for the information of the employees.

5.—Division of Profits.

Within thirty days after the close of the contract year the total amount of saving or gain will be divided as follows:

Fifty per cent. will be retained by the Company.

Ten per cent. will be allotted to the Foreman of the Foundry.

Forty per cent. will be distributed among the employees of the Foundry in the proportion of the actual wages earned by each during the contract year.

6.—Wages Rates.

The wages of each employee will be fixed, as heretofore, by the Foreman of the Foundry, who will continue to have full discretion in the employment and discharge of the help required, and in the direction of their work.

7.—Payment of Profits.

Each employee will be entitled to his pro rata share of the profits, whether he has worked during the whole year or only a portion thereof. Any share of profits belonging to those who may honorably leave the Company's service during the year will be forwarded to them, provided they shall have given proper information as to their address. Any profits due to employees, and not claimed within three months after the close of any yearly contract period, will thereby become forfeited: all sums thus forfeited will be paid over by the Company to the Yale & Towne Mutual Benefit Society.

8.—Piece Work.

Wherever feasible the system of piece-work will be employed, the piece rates being fixed by the Foreman subject to approval by the Company. All employees, whether working by the day or by the piece, will be entitled to their proportionate share of the annual profits on the basis of the actual wages earned by each.

9.—Foundry Supplies.

The Foundry account will be charged with all supplies furnished by the Company. The items so charged will include metals, fuel, sand, sieves, files, shovels, oil, waste, brooms, repairs, and, in general, everything consumed in the Foundry.

The supplies on hand at the beginning of the contract period will be charged to the Foundry account, and those on hand at the end of the year will be credited to the same account.

10.—Guaranty.

The Company guarantees the payment to the employees of the Foundry of the regular wages earned by each, on day work or piece work, irrespective of whether this contract shows a profit or not.

11.—Conditions.

The effect of the system being to give every workman employed under this contract a participation in the profits resulting from it, it is hereby stipulated, as a condition of the employment of each and every person engaged under this system, that, in consideration of the interest assigned him in the profits of the contract, all claim thereto shall be forfeited by him in the event of his discharge by reason of misconduct or incompetency, or in the event of his combining with others in any way to disturb or affect the relations between the Company and its employees. This provision in no way curtails the right of each employee to negotiate with the Company, through the Foreman, in regard to his own rate of wages, nor does it in any way impair the title of each employee to his proportionate share of the profits in the event of his honorably leaving the Company's service, whether at its desire or his own.

12.—Shop Rules.

All employees will continue to be governed by the Shop Rules of the Company, which are hereby referred to and made a part of this contract and agreement.

DISCUSSION.

The President, Henry R. Towne.—Supplementing what is stated in the paper itself, I may say that since writing it I have ascertained that during the year ending April 30th, in a case

where the system is in operation, the total profit or gain resulting from the operation of this system was $8,062, one-half of which was retained by the principal and the other half distributed among the operatives. The rates of dividends to the employees were approximately the same as those indicated in Appendix A of the paper, which range from a minimum of about one per cent. to a maximum of twelve per cent.; the mean is about four or five per cent.

If there are any members present who have in any way experimented with profit-sharing, or participation, or any kindred method of interesting employees in industrial works in the outcome of their work, it would be interesting to the membership to have the result of their experience.

Prof. Denton.—I hardly feel competent to speak about a subject of this kind, in the presence of the knowledge that a good deal of actual experience is necessary to be considered regarding it. But I feel that this paper is so admirable that one or two thoughts may be permitted. We all probably remember that this subject came out at the Washington meeting, and that our President then discussed the paper that was there presented, and made the matter interesting by detailing the extent to which this idea had already become prevalent in other countries with success; and considerable interest was evidenced on the part of other members. He promised us at that time to give us such a paper as this, and now keeps his promise in a very valuable way. The importance of the subject, I believe, can hardly be over-estimated; for I am informed that the idea is looked upon with favor by the labor organizations, in which case it may be likely to come before any manufacturer at any time. The idea in my mind regarding it is that the gain together with profit-sharing contains a distinct element of favor as compared with piece work. We all know, if a man is earning by the day, on a certain work which is uniform, certain wages at so many pieces in a day, and is apparently doing all that he knows how, and all that we know how to ask him to do, we know that if we put his work on piece price so adjusted that it is supposed that he will just about make wages, he will at once proceed to make double wages. In some way he will turn out so many pieces that his wages will double, and the tendency on the part of the employer is, the next time the piece work adjustment comes around, to readjust the piece price so that the man will more nearly approximate his former

day wages. That has been going on for many years in many establishments; and I believe that constant reduction in piece prices, and all the time getting from the workman more than he originally did, has resulted in a sour state of mind on the part of the latter; he thinks that the piece work system has been used to his disadvantage, and I can easily see that the question must arise in an establishment that is carrying on piece work like that of Mr. Towne's: How can we at once get the workman to squeeze a little more out of himself and at the same time be good-natured in doing it? A method of doing that is represented certainly in this idea of gain or profit sharing. I believe that the fact that the workman sees in it something to encourage him to go beyond piece work is likely to bring out a much better state of feeling between employer and employee than existed on the piece work system. I have seen the idea carried out on a small scale. I have in mind a manufactory which organized itself in a small way, and drew to it, through the acquaintance of the proprietor, certain excellent men, so skilful that they were able to earn the very highest wages. They went with him and expected that he would prosper, but he was barely able to drag along; business did not succeed, work was not available, and there was every motive to those men to leave him. They could go to more prosperous concerns where they would be likely to do better. I have seen this idea of gain-sharing carried out there on a very small scale, holding those men year after year. It was not the money they made, so much as the idea that they were interested with the proprietor in the profits of the concern. I have tried the same thing on a small scale in this way: We have instructors in our shops at Hoboken, in pipe fitting, blacksmithing and machinists' work. We are all the time extending our courses and asking those men to do a little more. We also often have certain experimental tests to perform for the general public, and we organized a department of tests which is presided over by the President, and any work coming in is given to the men best fitted to do it. Nine-tenths of the work naturally falls upon those mechanics in some way. We want them to do this work and not sacrifice the least point in the efficiency of the instruction. We ask them to carry out what they were hired to do and at the same time enable the college to earn a little money. There is no idea that so nicely fits the case as dividing a portion of the profits, and we have found that such a plan is working very nicely. Our men may be

called upon to take hold of any outside job, and work late hours or squeeze it in between times, and yet the system of instruction does not suffer, and the amount of profit, though small, is sufficient to make them feel it is worth while to put forth this exertion. This is very easy when you have a few men; but when you have hundreds of men, I can see that difficulties multiply enormously, because there will be some black sheep who thinks that he does not get enough, and he will communicate his irritation to his fellows, and it may lead to strikes. When it is done on such a scale as Mr. Towne has done it, and as well as he has done it, certainly great advantage must result, and great pains have been taken in his establishment; and I wish to testify to my appreciation of this fact.

The President, Mr. H. R. Towne.—In connection with this subject I wish to mention a book, which has just been published, which has more information, better stated, on the subject of profit-sharing than any other book in the English language. The best one we had heretofore was one by Sedley Taylor, an English book, which is not as complete as one or two publications in German and French. But the Rev. Dr. Gilman of Boston has, during the past year, prepared and published a book which is just out now under the title of "Profit Sharing between Employer and Employee," in which he has brought together all of the facts which are of interest in this whole subject of profit-sharing, commencing with a rapid review of previous conditions existing between employers and employees which departed at all from the simple wages basis; then follows a discussion of the reasons why the simple wages system is no longer satisfactory now and that something else has so to supersede it, and then a very thorough presentation of all the known cases of profit-sharing all over the world. France is the country where the system first took root to any extent, in the Maison Leclaire in Paris, and where it has been most largely practised, and French experience is the fullest and most interesting. The Germans have done a good deal with it. The English took it up some twenty-five years ago, and in two very striking cases put it into extensive and very successful use; each of them was finally abandoned within six or eight years, from causes having no direct connection with the question whether profit-sharing is a good or bad thing in itself; but the result of its abandonment was unfortunately to put the whole thing back very much in England, so that nothing more has been done there in that line

until lately, when it has again been taken hold of. In this country, within the last three years, profit-sharing has been started in twenty or thirty different establishments scattered all over the country; and Mr. Gilman, in his book, has brought together the facts, so far as proprietors were willing to give them, in all of the cases in each of the countries named, and also in Switzerland and Italy. His last two chapters constitute a *résumé* or summary of the results everywhere, stating plainly the failures where they have occurred, and so far as possible accounting for them. To anyone who contemplates giving thought to the subject of profit-sharing, or any modification of it, Mr. Gilman's book will be an invaluable aid.

In my own opinion the time is coming very rapidly when some readjustment of the relations of labor and capital has got to be made, not necessarily by reason of the demands of labor organizations, but simply, if we disregard all questions of philanthropy or sympathy, from motives of self-interest on the part of the employer. Some better method of bringing out of men the best that is in them in doing their work must be adopted. It is a fact which we all realize, of course, although we sometimes forget it, that the supreme factor in human endeavor is self-interest, and that any plan whereby we bring in self-interest as an agent to influence the workman, will induce him to take hold in a degree and manner that nothing else will approach, and that any system, such as the simple wages method, which entirely ignores self-interest and gives a daily stipend to a man whether he does much or little, is certainly a very incomplete and very unsatisfactory adjustment of the problem. I believe that all large employers of labor will find this subject one of profit and of interest to take up in the near future, and that the outcome should be the development of a large fund of experience which will aid others who desire to go into it. The meetings of this Society since they have been opened to the discussion of economic problems will make a very proper place for the presentation of data relating to such matters, and I know that it is the desire of many members that experiences of this kind, when obtained by the members, may and should appear in our Transactions.

Prof. Wood.—I wish to ask, Mr. President, if your experience makes you feel that this can be carried into a great variety of business transactions—where a manufacturer is making a variety of things?

The President.—In answer to Prof. Wood's question I may say that the system is in operation now under twenty-one different contracts, and is to be extended to others, and that no two of those twenty-one contracts relate to the same product; a number of them somewhat allied products involving a different group of men, different kinds of machines and different work, but quite a number of them are totally distinct products, including two foundries, one on iron work and another on brass and bronze, several wood-working operations, one which largely involves chemical operations, and another which includes the work of a large wheel-finishing room. The others are chiefly machine shop work. I think this is a thorough answer to the question, and it is my conviction about it, that the system is applicable to almost any industrial product that I know of.

Prof. Wood.—I wish also, in order to cover the ground, to ask whether the success of it will not depend largely upon the managers. You speak of securing the self-interest of the laborer. Now, if the business is not so managed as to secure a dividend, I would ask whether the interest would not depart from the workman in such cases and so be a failure. Even if there are only exceptional cases of failure, it does not invalidate the system by any means; but does not very much depend upon the managers in making it successful?

Mr. Chas. H. Parker.—I am glad to see such papers as the one presented by Mr. Towne on the question of gain-sharing. I think in the present condition of mind of the laboring people, as well as of the manufacturers, it is one of the problems that needs attention fully as much as any of the problems connected with the manufacturing industries. It has been my fortune for over something like fifteen years to be in a position where this problem has been brought to me very forcibly. I have found that nearly all the difficulties and troubles that arise regarding a fair and just arrangement, you may say, have a starting point in the selfishness of human nature. But I can say from experience that I never yet have seen any reason to lose faith; that where a spirit of justice and fairness is used on the part of the manufacturer, sooner or later, although not always at first, the same spirit has been shown by the workmen; and as a whole the results have not weakened my confidence in the final adoption on both sides of just and fair ideas. There are questions constantly arising that cannot at first be foreseen. Self-interest will often cause the workmen to take a

position that the manufacturer is the one who seeks to do them an injustice; but if the proprietor meets that spirit with fair, open treatment and intercourse, I will say that in that case I have found generally on the part of men a disposition to meet him in the same way. I have one case in mind of a question that arose in regard to work that was let to an individual contractor who hired his workmen and made his individual bargains with them, the actual cost being paid by the proprietors as suggested in Mr. Towne's paper. During the progress of the work the establishment was destroyed by fire. The contractor had unfinished work in process of manufacture unsettled for, something like seven or eight hundred dollars. The question came up, How shall this matter of loss to the contractor for the interest he had in the contract (the loss of his profits that were partially wiped out by the fire) be settled? It would seem in the first case as though it would be plain enough that his risk on undelivered work, so to speak, was of the same nature as the risk of any manufacturer on undelivered machinery or materials, that he had not covered by insurance, but it is hard work sometimes to make a workman look at things in just that light. In this case I did not attempt to decide as to what was right. I simply stated that it seemed to me that the contractor was obliged to carry a certain amount of risk on that portion of his contract work that was not settled for, and left it for him in common with one or two other contractors who were involved in the same way to talk it over among themselves, and to my surprise they voluntarily came forward and said that after thinking the matter over they decided that, to be secured against any risk of that kind, it was their duty to be insured, either through the regular channels of insurance on unfinished products in process, or to have some understanding with the manufacturer by which he would reimburse them by paying a certain amount for the risk. And the matter was finally settled by their coming to the agreement that the risk did properly belong to them. I will say, in regard to this question of the constant reduction of contract prices, I find that that is easily regulated if attention is given in the first place to investigating as to what is a fair profit for a man to make. We will say of a contractor who is able to manage twelve or fifteen men himself, What is a fair compensation for that man's service? Is it expecting any too much that he should make five dollars a day? By careful investigation of the question, it is easy to arrive at what is the marketable value of

the services of such a man. Now, if the material exists to judge how many days' labor enter into the construction, and what the contract price should be to guarantee under the ordinary condition of things what is looked upon as a fair compensation, probably in three cases out of four the contractor himself would look upon it as altogether too low a price. He could not see clearly himself how he could make as much money as this. You put this question to him: "If you could know as certainly as you can know anything that in managing twelve or fifteen men, and with the ordinary conditions of the work as they come along day after day, you could make five dollars a day for your own individual services, would not that be satisfactory?" In the majority of cases the contractor will say: "Yes; if I knew I could make five dollars a day, I should be perfectly satisfied." Well, then say to the contractor that you believe that he can do it; that if after a fair trial you are satisfied that he has made a fair effort to do it, and if, after he has made that effort, you find that he could not make that amount, which you are perfectly willing that he should make, then it is an easy matter to readjust the price to his satisfaction; or if he makes in excess of that amount, you can present to him the fact that he expressed himself as being satisfied if he could make five dollars a day, and there is an opportunity for readjustment in the other direction. At the same time it is the duty of the proprietor to do everything he can to supply that contractor with facilities for doing that work, so that he can keep the contract price down to what is a fair compensation for the workmen; and in most cases the better facilities he provides for the workmen to do with, the better it is for himself. He reaps the benefit of it as well as the workmen. So that it is reduced to this point: How can we make it possible to make contracts for month after month or year after year without much if any change in the contract price? If a rigid system of inspection is insisted upon and carried out, if the workman in his greediness or ambition to make more money slights his work, you always have it in your power to insist that the quality of the work shall be kept up to a certain standard; or if you find that he can do better work than he is doing, instead of changing the price you can insist that the standard of the work shall be still more improved. So that it seems to me, in these days of apparent conflict between capital and labor, there is a way out of a great many troubles, and it is not only a business-like way, but it is a Christian way; it brings

into it some moral principles as well as other questions, and I believe that in that direction will be found the solution of this labor problem as between the manufacturer and the laborer.

Prof. J. B. Webb.—There is one point that has not been brought out. It is evident that a plan of this sort must tend to make each workman watch the others and feel anxious that every other man should do his full duty. It might even go so far in the case of a very poor workman as to make the rest exceedingly desirous to have him discharged; so much so, indeed, that they might even bring the desirability thereof in some way to the notice of the proprietor. I should like to know if in Mr. Towne's experience anything of that sort has occurred.

Mr. C. W. Nason.—I would like to say that I have tried in a limited way the gain-sharing system by giving the man under me in each department, the foreman, a certain interest in the year's business: making an annual contract, and giving each foreman an interest in the year's business. It appears to have worked satisfactorily. The shop I run chiefly on the basis of piece work, which after all appears to be a modified form of the gain-sharing system, and I found on piece work, if that is carefully estimated as to what a fair day's work is, that there is not very much reduction unless machinery is put in.

There are one or two questions I would like to ask. First, whether you have any idea what the percentage of cost of book-keeping amounts to when you have to go into detail, such as would be necessary in a shop of this sort. Secondly, whether in running a foundry, say on job-work, such as is coming in day after day, and will run say from 2½ to 3 or 5 cents a pound,—whether in your opinion any system can be formed by which the gain-sharing device could be applied to it.

Mr. E. F. C. Davis.—I think that the success of these schemes depends more largely than anything else on the moral influence that the managers exercise over the men. I was with a friend a short time ago while the labor question was in a very delicate condition.

He wished to introduce the "piece work" system in the shop under his charge, but knew very well that the men would not allow it to be introduced without great trouble. So he told the men that he could not ask them to work piece work or by contract, but that in the machine shop he would allow a definite number of hours to do a certain job, and that of any time he saved

from that he would get one-half the benefit. But the men did not seem to want to do that. He went to a very intelligent man and said, "That job you are on we have estimated to take ten hours; we think it can be done in less than that; if you can do it in less than that you can have the benefit of one-half of the time saved." He said, "I don't want to work that way." The other said, "If you do it and we pay you the one-half, you will not object to taking the money?" The man simply smiled. He went on and did the work in less than ten hours. He took the half, and from that on there was no trouble. The whole thing went on afterwards on that principle. That is only one instance to show that success depends very largely on the moral influence which is brought to bear in dealing with the subject.

Another case I have in mind is that of a pretty large shop where piece work had been introduced. The men fought against it for some time. That is, they showed a cold disposition toward it. But it was brought about in this way: We told a man that we would set the price of each piece at about what we thought they could make it at, and if they could not make wages at that, we would allow them their wages, so that they would feel that we were not trying to grind them down; but if they made more than 20 per cent. above their wages that their price would be reduced.

We found that that insured a fair profit to the concern, and it pleased the men; and they are very well satisfied with it even to this day.

The piece work system does not always antagonize the men. These shops were part of a large concern which employed probably some thirty thousand men altogether, and only about seven hundred men were shop hands. The thirty thousand other men went out on a grand strike. In fact, all the employees of that company went on a strike, with the exception of the shop men, and they could not be induced to join the strike. They had fought against this piece work system up to within six months before that time, but they found in the meantime that it was working to their interest. The men understood that fact, and when the strike came about they refused to go out on strike. The fact that those shop men refused to go out had a very important bearing on the breaking up of the strike. They not only have stopped fighting against the system, but appreciate the benefits of it.

Mr. Parker.—I merely wish to mention one example in connection with this system of gain-sharing of which the paper speaks.

It is taken from my own experience. I had a contractor at work certain class of machine work six years ago. The same contractor is working on the same class of work to-day. Six years ago the machinery and tools he had to do that work with were very much behind the age, and it was not possible to produce economically with them. He was making at that time a certain price per day. It became apparent that, to reduce the cost of production, it was necessary to give him better facilities and better tools. The subject was discussed with him, and he was asked the question, "If you can be supplied with machinery to enable you to produce that work at a reduction, and with the feeling all the time in your mind that you are not going to suffer any reduction of the net gain to yourself, will you submit to the reduction?" Such a man cannot help saying, "Certainly." It was tried and kept up more or less for four years, until the process was got down about as simple and direct as it could be. The result is, that the contractor to-day is making fifteen to eighteen per cent. larger net gain than he was six years ago, and the net contract cost to the proprietor is over forty per cent. below what it was six years ago.

The President.—If there are no further remarks I will close the discussion.

In the first place, the system is not complex or difficult. The only difficult part is the planning at its inception; and in most productive industries this is not a serious trouble and will certainly be somewhat helped by the description contained of the method in the paper, including the rules which are given at its close as in force at the works in question. After the method has been adapted to any particular business, its operation is an exceedingly simple thing.

To answer another question, the cost of the clerical work involved is comparatively trifling. I think I am right in saying that where the system is now in use some twenty-one contracts being in force affecting over three hundred men, the total increase of clerical work is much less than what would be accomplished by one ordinary clerk. I am quite within bounds in saying that one-half of the time of a good clerk would represent all the added work which the adoption of this system involves in that instance.

In answer to the question of Prof. Wood as to what happens when no profit is derived, I would call his attention to the fact

that such a case cannot arise under this system. This is not profit sharing in which losses in business would disturb the relation, but simply an offer from the employer to give the employee a fraction of the *gain* or saving accomplished in the cost of work. If any saving is made, the employee gets his fraction of it; if no saving is made, he simply gets his wages. Mr. Parker's case of a loss by fire suggests simply to me the need that exists in all these matters of a clear, definite contract at the commencement. The feasibility of framing such a contract is illustrated by the foundry rules which cover three pages of this paper. They are brief; but I think they meet all the contingencies which would naturally arise.

The case of piece-work operations with prices for unfixed periods has been touched upon by several of the speakers, and that is a subject which I have referred to at our previous meetings, and which I have always looked upon as a blunder on the part of managers. If you give contract or piece work to a man and tell him that you reserve to yourself the right to reduce his rate at any time, you are simply taking away from him the stimulus to reduce the cost. Workmen know well enough that if they make large wages the employer will cut down their piece rate, and that in order to make larger earnings they must then work harder. The result is that where that system obtains, the workman gauges the point at which he thinks the employer will let him alone, and regulates his work so as not to produce more than that limit. In my experience I have found it exceedingly beneficial to make contract or piece rates for definite and usually for pretty long periods, always for twelve months, and in the case of older jobs, where the work is well understood, the rates are fixed for two, three and sometimes five years. The workman then has an inducement to do the best he can during that period, and at the end of it the reduction of cost has sometimes been surprisingly large.

In answer to Mr. Nason's question, in regard to a varied product, I would say, that in my case that difficulty is overcome by dividing the product into grades or classes, each of which has a graded pricing, and the foreman determining which grade the work belongs to at the time it is finished.

Want of faith on the part of the men in any system of this kind is a fact that has to be recognized and which is very apt to continue during the first year. As stated in the paper, the best possible argument wherewith to meet it is a cash dividend. In starting

this system in the first instance, I encountered that difficulty generally. The men were either indifferent or else hostile to believing that it was some scheme whereby the Company to get more from them without paying for it. And in cases of tl kind all you can do is to simply wait, and perhaps to reason a lit with your more intelligent men. Induce them to use their inf ence to carry the thing into effect fairly, and at the end of tl year pay them a dividend if it has been earned. Doubts ar difficulties will disappear very promptly after the men ha received the first dividend in cash.

Prof. Webb.—If each man watches the other, and each m notices that the eleventh man is not doing his share, would n they want to get rid of the eleventh man? In some cases, mig they not even go so far as to make the proprietor aware of th fact?

The President.—I can say that the latter effect might not obt in some cases, although it has not happened in my experien The other effect is very marked, that the men are interested the efficiency of the others about them, and that the men are interested in economy in avoiding the waste of materials. T tendency of the system is unquestionably to raise the *morale* the whole force, so that it acts beneficially in that respect as w as others.

CCCXLII.

SOME PROPERTIES OF AMMONIA.

BY DE VOLSON WOOD, HOBOKEN, N. J.
(Member of the Society.)

AMMONIA is so extensively used in engineering processes, especially for refrigerating purposes, that it seems desirable to have tables of its properties in English units. For my part I desire to represent the relation between the pressures and temperatures of saturated vapors by Rankine's formula—

$$\text{Log}\, p = A - \frac{B}{\tau} - \frac{C}{\tau^2}, \quad . \quad . \quad . \quad . \quad (1)$$

—whenever it can be done with sufficient accuracy. The first two terms of this formula were deduced by Rankine from his hypothesis of Molecular Vortices, but, finding that it did not represent Regnault's experiments throughout their range with sufficient accuracy, he added a third term analogous to the second, containing the inverse square of the absolute temperature. It is well known that this equation represents the results of Regnault's experiments upon several saturated vapors with much accuracy. In order to test it with ammonia, I tabulated the three sets of experiments given in Regnault's *Relations des Expériences*, Vol. II., pp. 598–607. The results, after reducing them to degrees Fahrenheit and pounds per square inch, are given in the first and second columns of the following table, and are represented by dots in Fig. 130. Having selected three points through which the trial curve should pass, the constants A, B, C, in Equation (1) were determined. The value of C was 0.00178, which, after being divided by τ^2 gave results so small as to make the value of the third term inappreciable, and it was omitted in all the later investigations. The constants were then found for the locus passing through the points $\tau_1 = 435.66°$, $p_1 = 15.8$ and $\tau_2 = 592.51$, $p_2 = 335.93$, and the results compared with the experiments, after which

the constants were changed arbitrarily, but slightly, so as to obtain better results. The formula finally adopted was:

$$\text{Com. log } p = 6.2469 - \frac{2200}{\tau}; \quad . \quad . \quad . \quad . \quad (2)$$

and the pressures corresponding to the temperatures given in the first column were computed and entered in the third column. The

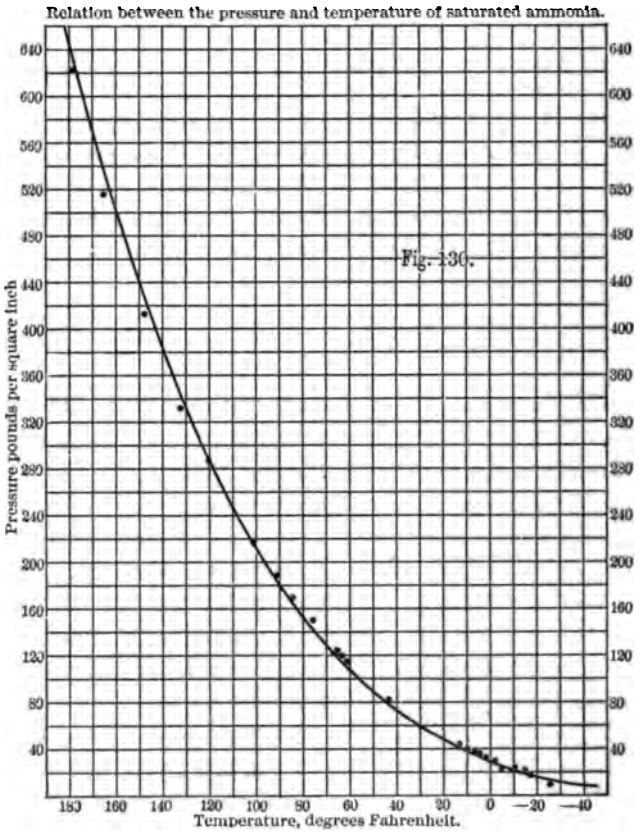

differences between the observed and computed results are entered in the fourth column, the + sign being prefixed to those differences in which the computed value exceeds the observed. I have not only had these results verified, so as to be certain of their correctness, but have tried equations containing other values for the constants, to see if the results would agree more nearly with those of experiment; but the equation here given is the most satisfactory.

TABLE I.

FIRST, SECOND, AND THIRD SERIES OF EXPERIMENTS ON AMMONIA,

Together with the pressures at the temperatures given, calculated from the Equation $\log p = 6.2469 - \frac{2200}{\tau}$.

1. Temperatures in degrees Fahrenheit.	2. Pressure lbs. sq. in. as observed by Regnault.	3. Pressure lbs. sq. in. as calculated from the equation.	4. Numbers in Col. 3 less the corresponding ones in Col. 2.
−24.66	15.80	15.81	+0.01
−24.46	15.96	15.97	+0.01
−23.73	16.25	16.29	+0.04
−17.45	19.43	19.11	−0.32
−17.25	19.51	19.29	−0.22
−14.51	21.26	20.69	−0.57
−14.26	21.66	20.83	−0.83
−11.06	23.01	22.68	−0.43
−8.88	24 12	23.84	−0.28
−8.68	24.26	23.97	−0.29
−1.07	30.32	28.84	−1.48
−1.03	29.33	28.87	−0.46
−0.96	29.43	28.92	−0.51
−0.58	29.65	29.18	−0.47
−0.45	29.55	29.27	−0.28
+1.89	31.30	30.97	−0.33
2.16	31.60	31.15	−0.45
2.89	32.36	31.63	−0.73
7.68	36.20	35.44	−0.76
8.44	36.83	36.07	−0.76
10.13	38.39	37.49	−0.90
13.06	41.35	40.07	−1.28
13.24	41.07	40 24	−0.83
32.00	62.12	60.45	−1.67
39.15	70.07	70.02	−0.05
40.50	73.88	71.96	−1.92
44.47	80.23	77.91	−2.32
45.18	81.39	79.03	−2.36
45.21	81.36	79.07	−2.29
47.21	84.67	82.24	−2.43
49.96	87.20	86.78	−0.42
52.56	93.72	91.26	−2.46
56.34	103.40	98.08	−5.32
57.88	102.76	100.9	−1.86
64.67	118.89	114.6	−4.29
66.72	123.86	118.9	−4.96
67.46	122.44	120.5	−1.94
77.63	148.77	144.5	−4.27
86.88	170.60	169.4	−1.20
90.86	185.46	180.7	−4.76
102.02	217.75	217.3	−0.45
120.07	284.30	287.5	+3.20
131.85	335.93	342.0	+6.07
147.83	418.99	427.94	+8.95
163.98	518.733	530.8	+12.07
179.10	623.47	642.9	+19.43

By means of this equation Table II. has been computed, which the pressures per square inch are given for every fi degrees of temperature, beginning with forty degrees below th zero of Fahrenheit's scale, and ending with 150 degrees abov The formula does not represent the experiments with sufficient accuracy above the latter temperature.

TABLE II.

POUNDS PER SQUARE INCH CORRESPONDING TO DEGREES F. OF TEMPERATURE OF SATURATED ANHYDROUS AMMONIA.

Temp. Fahr.	Lbs. per square inch.	Temp. Fahr.	Lbs. per square inch.
− 40	10.40	55	95.61
− 35	11.98	60	105.1
− 30	13.76	65	115.3
− 25	15.74	70	126.2
− 20	17.96	75	138.0
− 15	20.44.	80	150.6
− 10	23.13	85	164.2
− 5	26.23	90	178.5
+ 0	29.58	95	193.9
5	33.29	100	210.4
10	37.37	105	226.9
15	41.85	110	246.4
20	46.76	115	266.2
25	52.12	120	287.15
30	57.97	125	309.35
35	64.33	130	332.85
40	71.24	135	357.53
45	78.74	140	383.93
50	86.86	150	440.76

The solution of the problem of the ammonia engine and of the ammonia refrigerating machine requires a knowledge of the specific heat of liquefied ammonia, and its latent heat of evaporation. Both these quantities were determined by Regnault, but the records of the experiments were destroyed during the reign of the Commune in 1870. *Rel. des Exp.* Vol. II. p. 609; *Comptes Rendus*, Vol. 104, p. 897. These constants have not since been determined so far as known. Regnault observed that the specific heat of liquid ammonia is considerable, and the latent heat of evaporation is also very great. *Rel. des Exp.* Vol. II. p. 608. Ledoux, a French scientist, by the use of a formula established by Zenner, deduced an approximate value for the latent heat of evaporation and other unknown values. But Zenner's formula was founded on hypotheses not warranted by the science of thermodynamics, and which are contradicted by his resulting equations. For instance,

he assumed that the specific heat of the gas is constant under constant pressure, and variable at constant volume; but the error of this assumption is easily disproved by the use of his equations. Ledoux also made an arbitrary assumption in regard to the coefficient of expansion of this gas; but with such data he made an ingenious thermodynamic analysis deducing expressions for the latent heat of vaporization, total heat of steam and of the liquid, and, consequently, the specific heat of the liquid.

Notwithstanding the theoretical errors in Zenner's assumptions, it must be admitted that his resulting equation—

$$pv = 50.933\ \tau - 192.5\ p^{\frac{1}{4}}$$

—represents with considerable accuracy the curve of saturation, and also the few experiments upon superheated steam reported by Hirn. The fact is, the specific heat of steam is so nearly constant at constant pressure—as shown by Regnault—that the error resulting from assuming it to be strictly constant will not seriously affect the result. But it is also true that the specific heat at constant volume will be more nearly constant than that at constant pressure—as may be shown from the equations and the general theory. In the preceding equation p is in kilograms per square metre, v is the volume in cubic metres, and τ is the absolute temperature on the centigrade scale.

I intend in another paper to give the results of my investigation with another formula, somewhat similar to the above, founded upon an hypothesis of Rankine.

Ledoux assumed 0.0039 for the coefficient of expansion per degree centigrade.

This coefficient for the permanent gases is	0.00366
This coefficient for sulphurous acid	0.00390
This coefficient for cyanogen	0.00387
This coefficient for steam	.00425

These values show that one is somewhat restricted, but not very closely, in the choice of an arbitrary value. At the temperature of the melting point of ice, at which state the saturated vapor will be under a pressure of about 60.4 pounds to the square inch, Ledoux found the latent heat of vaporization to be 564½ British thermal units per degree Fahr. We find it to be about 484.

It has been shown by Mr. Frederick Trouton (*Phil. Trans.*, 184, (2), p. 54), that

$$\frac{\text{Latent heat of vaporization} \times \text{Density}}{\text{Absolute temperature of boiling-point}} = a\ constant, \text{ nearly.}$$

The density here referred to is that resulting from the chemical equivalents. We have $NH_3 = 14 + 3 = 17$, and to make it correspond to Mr. Trouton's analysis it must be divided by 2, giving 8.5. The boiling-point is that attained under the pressure of one atmosphere. The smallest value of the constant is 10.30, and the largest 13.17; so that if ammonia falls within the limits of the substances given, its latent heat of vaporization will exceed 522 B. T. U., and be less than 671, under the pressure of one atmosphere.

Again, the latent heat of vaporization is given by the formula

$$\tau v \frac{dp}{d\tau}.$$

I find that the equation

$$\text{Log}_{10}\, p = 6.2495 - \frac{2196}{\tau}, \quad . \quad . \quad . \quad . \quad (3)$$

where p is pounds per square inch, or

$$\log_{10} p = 8.4079 - \frac{2196}{\tau}, \quad . \quad . \quad . \quad . \quad (4)$$

where p is pounds per square foot, agrees better with Regnault experiments within the range of ordinary practice than equati (2), and will be used in the following investigation.

Differentiating, we find

$$\tau v \frac{dp}{d\tau} = 2196 \times 2.3026 \frac{pv}{\tau},$$

and dividing by 778, we have

$$h_e = 6.49922 \frac{pv}{\tau}, \quad . \quad . \quad . \quad . \quad . \quad .$$

For the state where the temperature is that of melting ice under the pressure of one atmosphere we have

$$\frac{p_0 v_0}{\tau_0} = R. \quad . \quad . \quad . \quad . \quad . \quad . \quad . \quad (6)$$

To find R, Regnault gives, for the theoretical density of the gas, 0.5894 (*Rel. des Exp.*, Vol. II. p. 162), but he also says: "The real density of ammonia gas is certainly higher than the theoretical; the only experimental density of which I have knowledge gives 0.596" (*Ibid.* Vol. III. p. 193).

Vol. of a gramme of air at 0°C., 760^{m} . . . . 1.293187 litres,
or vol. of a kilog. of air at 0°C., 760^{m} . . . . 1.293187 cu. metres,

(*Ibid.* Vol. I. p. 162.) Hence the weight of one litre of the gas at 0°C., $760^{mm.}$ will be

$$1.293187 \times 0.596 = 0.770739 \text{ grammes,}$$

and the volume of one gramme of the gas will be

$$\frac{1}{0.70739} = 1.2973 \text{ litres.}$$

Reducing this to the equivalent of one pound and cubic feet gives

$$1.2996 \frac{35.3161}{2.2046} = 20.7985 \text{ cu. ft. per lb.} = v_0,$$

$$\therefore \quad R = \frac{p_0 v_0}{\tau_0} = \frac{2116.3 \times 20.7985 \times}{492.66} = 89.343. \quad . \quad . \quad (7)$$

At the state where $\frac{p_0 v_0}{\tau_0} = \frac{pv}{\tau}$, equation (5) gives

$$h_e = \quad v \frac{dp}{d\tau} \div 778 = 6.49922 \times 89.348 \div 788 = 580.66. \quad . \quad (8)$$

British thermal units. This would be the latent heat of vaporization of ammonia at the temperature of melting ice under the pressure of one atmosphere, if the vapor were saturated at that state.

But it is superheated at that state; and according to the theory of imperfect gases, the ratio of pressure to absolute temperature is

less for a given volume at lower temperatures; hence for the volume 20.7985 *the latent heat of evaporation cannot exceed* 580.66 B. T. U. Ledoux gives about 600 B. T. U. for this volume; hence his values are too large in the vicinity of this volume, and we will find that all his values are too large within the limits used in practice.

We now proceed to find a general value for $pv \div \tau$. The general equation of imperfect gases is, according to Rankine,

$$pv = R\tau - a_0 - \frac{a_1}{\tau} - \text{etc.},$$

where a_0, a_1, etc., are inverse functions of v. The first two terms of this equation are generally sufficient to represent a fluid within the ordinary range of experiment, hence we write

$$p_1 v = a\tau - a_0 \quad . \quad . \quad . \quad . \quad . \quad . \quad . \quad (9)$$

This may be tested for steam. For any fluid we would have for any two states of same volume,

$$p_1 v = a\tau_1 - a_0,$$

$$p_2 v = a\tau_2 \quad a_0;$$

$$\therefore \frac{p_2 - p_1}{\tau_0 - \tau_1} v = a.$$

From Hirn's experiments and a table of Saturated Steam we have:

1 Lb. Cu. Ft.	Temperatures. Dg. F. Absolute.			Pressures per lb. sq. ft.		
	Superheated τ_2.	Saturated τ.	Dif.	Superheated p_2.	Saturated p.	Dif.
29.63	746.46	666.55	79.81	2116.3	1885.3	231
11.16	852.26	723.13	129.53	6348.	5328	1020
9.21	935.46	735.00	200.46	8464.	6580	1884
6.63	861.66	757.40	104.26	10580	9216	1362

These give

$$\frac{231}{79.81} \times 29.63 = 85.8$$

$$\frac{1020}{129.53} \times 11.16 = 86.0$$

$$\frac{1884}{200.46} \times 9.21 = 85.9$$

$$\frac{1362}{104.26} \times 6.63 = 86.6$$

Mean, 86.1

If the theory and observations were correct, the values of a would all be the same, but perfect agreement is not to be expected.

The value 86.1 is larger than that found on the condition that steam is a perfect gas composed of two permanent gases, hydrogen and oxygen; for at the pressure of one atmosphere we have:

	Lbs.
One cubic foot of hydrogen, weight.....	0.005592
Half a cubic foot of oxygen, "	0.044628
One cubic foot, or H_2O, weight.....	0.050220

This being ideal steam at 32° F., we have for the volume of one cubic foot of ideal steam at 32° F., under one atmosphere:

$$v_0 = \frac{1}{0.050220} = 19.913 \text{ cu. ft.}$$

$$\therefore \frac{p_0 v_0}{\tau_0} = \frac{2116.3 \times 19.913}{492.66} = 85.51$$

The value found above is

$$100 \frac{86.1 - 85.51}{85.51} = 0.59 \text{ per cent.}$$

greater than the ideal value, or about $\frac{6}{10}$ of one per cent. greater. The value of a, found by the writer for actual steam at 212° F., is 83.37, which is $2\frac{1}{2}$ per cent. less than the value for ideal steam (*Thermodynamics*, p. 103).

The hypothesis, then, of equation (8) is satisfactory for steam at and above the state of saturation, and the writer has shown in his *Thermodynamics* (2d ed., p. 312), that $a_0 = \frac{a}{v^{\frac{1}{2}}}$ very nearly, the equation for steam being

$$pv = 96.95\tau - \frac{19712}{v^{\frac{1}{2}}}$$

Regnault's experiments show that pv for ammonia diminishes with diminution of volume, the same as for steam; so we assume the equation

$$pv = a\tau - \frac{b}{v^n}. \quad . \quad . \quad . \quad . \quad . \quad . \quad . \quad . \quad (10)$$

To find the constants in this equation, we resort to the experiments of Regnault.

TABLE III.

Results of Regnault's experiments on the elasticity of Ammonia Gas. The temperature of the water surrounding the tube containing the gas was 8.1° C. (46.58° F.).

Marks on the vertical scale.	Relative volumes.	Pressures—mm. of mercury.	Products. pv.
72	841.95	668.93	56325
68	800.00	703.53	56282
64	758.56	741.23	56227
	(718.07)	(782.48)	(56187)
60	717.26	783.18	56174
56	675.84	829.98	56094
52	634.46	882.98	56022
48	592.83	943.18	55915
44	551.40	1013.63	55892
40	509.98	1092.53	55715
36	468.37	1186.38	55568
32	426.85	1299.11	55452
28	384.89	1435.33	55243

$$68 \ldots p = 703.53, \quad pv = 56282, \quad \frac{pv}{p'v'} = 1.01881.$$
$$28 \ldots p' = 1435.33, \quad p'v' = 55243,$$

In determining the ratio of pv to $p'v'$, Regnault chose those experiments in which the pressure of the larger was about double that of the smaller, and this is why 703 was used instead of 668. The products pv in the last column are one-tenth their actual value, but no error results in the ratio on this account. The marks on the scale differ by equal increments, and the volumes decrease by nearly constant increments, the mean for the entire range being 41.55; but the pressures increase by increasing increments. If the products pv were constant, the gas would be perfect. The pressures and relative volumes determine points in the isothermal AC, Fig. 208, of this gas for the temperature 8.1° C. (46.58 F.). The line AB represents the isothermal of a perfect gas passing through A, the temperature of which would be somewhat

less than that of AC, since the two isothermals will be asymptotic to each other at an indefinite distance to the right, and hence for the same temperature both cannot pass through the common point A. The pressure at A will be 668.93 mm., and at C 1435.33 mm., according to the preceding table; the relative volume Ov will be 841.95, and Ov', 384.89. The equation of the isothermal AB of a perfect gas passing through A will be

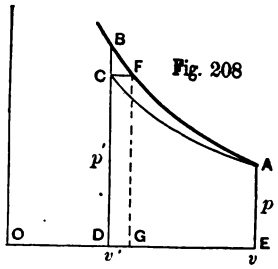

Fig. 208

$$pv = 668.93 \times 841.95\ \tau = 5632.50\ \tau.$$

The ordinate DB will be

$$DB = \frac{5632.50}{384.89} = 1463.63;$$

$$\therefore BC = 1463.63 - 1435.33 = 28.30.$$

$$\frac{BC}{BD} = \frac{28.30}{1463.63} = 0.0193,$$

hence, through a range of pressures of 1435.33 − 668.93 = 766.40 mm., or more than one atmosphere, the pressure falls below that for a perfect gas nearly 2 per cent.

We may now find the superior limit of the latent heat at the volume

$$v = \frac{718.07}{1435.33} \times 20.7985 = 11.15 \text{ (nearly)},$$

as shown hereafter; for it will be the value in equation (8) divided by 1.01881, or,

$$h_e = \frac{580.66}{1.01881} = 570.0, \qquad (h')$$

which value it cannot exceed.

In Fig. 207 let a be the state representing the atmospheric pressure, 760 mm., at the temperature of melting ice, 0°C.; then will the volume oh be 20.7985 cubic feet for one pound, as found above. We now find the pressure at state b on the isothermal 8.1° C. for the same volume, and since the gas will be superheated at a

and all temperatures above, the law of perfect gases will hold almost exactly for this distance, and we have

$$pv = R\tau;$$

$$\therefore p = \frac{89.343}{20.7985}(46.58 + 460.66) = 2178.92$$

pounds per square foot. In millimeters this will be

$$2178.92 \times \frac{760}{2116.3} = 782.48 \text{ mm.},$$

which value is entered in a parenthesis in Table III. Regnault made an observation at a pressure of 783.18 mm.—a pressure exceeding that at b by only 0.70 mm.—the *relative* volume corre-

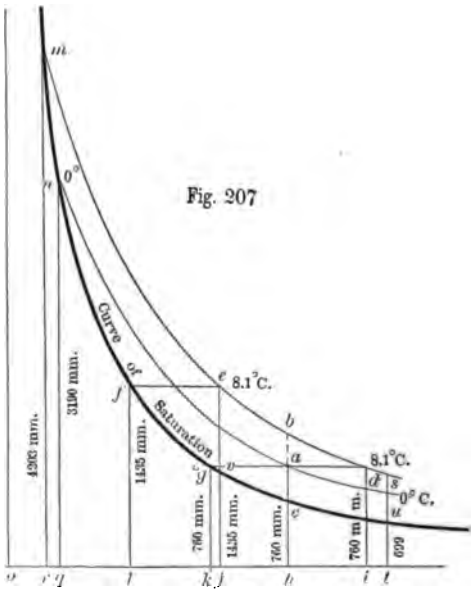

sponding to which, assuming that the volumes and pressures change uniformly between consecutive observations, will be 718.07, which value is entered in Table V., in a parenthesis, and also the corresponding product $pv = 561.870$. The actual volume at b is 20.7985 cubic feet, and the volumes per pound for all the twelve experiments of Table V. may be found by multiplying the *relative* volumes by $\frac{20.7985}{718.07}$; and the pressures in pounds per square foot

will be the millimeters multiplied by $\frac{2116.3}{760}$. These operations give the following table:

TABLE IV.

Results of Regnault's experiments upon the elasticity of Ammonia Gas at the constant temperature of 46.58° F., reduced to English units.

Volume. Cu. ft. per lb.	Pressures.	
	Pounds per sq. foot.	Pounds per sq. inch.
24.3716	1,862.70	12.93
23.157	1,958.98	13.60
21.944	2,064.10	14.33
(20.7985)	(2,178.96)	(15.13)
19.563	2,311.20	16.05
18.365	2,458.80	17.07
17.160	2,618.78	18.19
15.961	2,822.54	19.60
14.762	3,042.29	21.13
13.557	3,303.65	22.94
12.355	3,617.77	25.12
11.1412	3,996.82	27.76

The numbers in the parentheses are interpolated.

The pressure at b is only 0.43 of a pound higher than at a, so that the error, if any, in assuming the law of perfect gases through this amount, will scarcely be perceptible.

For state whose volume is 18.365, we have

$$pv = 2458.80 \times 18.365 = 45196 \text{ ft. lbs.};$$

for state s, representing the first experiment in Table VI.,

$$pv = 1862.70 \times 24.3716 = 45397 \text{ ft. lbs.};$$

and for state e,

$$pv = 3996.82 \times 11.141 = 44529 \text{ ft. lbs.}$$

These give

$$\tau a - \frac{b}{\tau\,(24.3864)^n} = 45397.$$

$$\tau a - \frac{b}{\tau\,(20.7985)^n} = 45156.$$

$$\tau a - \frac{b}{\tau\,(11.1481)^n} \quad 44529.$$

These give, τ being 507.24,

$$a = 91.005,\ b = 16921\ \tau,\ n = 0.97.$$

We will take

$$a = 91,\ b = 16920\ \tau,\ n = 0.97;$$

and equation (10) becomes

$$\frac{pv}{\tau} = 91 - \frac{16920}{\tau v^{0.97}}; \quad . \quad . \quad . \quad . \quad . \quad . \quad . \quad (11)$$

and therefore equation (5) gives for *the latent heat of evaporation of ammonia*

$$h_e = 592.5\left(1 - \frac{185.93}{\tau v^{0.97}}\right). \quad . \quad . \quad . \quad . \quad . \quad (12)$$

For state c we have

$$v = 20.7985 \text{ cu. ft.}$$

Equation (11) gives

$$p = \frac{91}{20.7985}\,\tau - \frac{16920}{(20.7895)^{0.97}},$$

and this, substituted in equation (4), gives

$$log\ (4.3753\ \tau - 4.2843) = 8.4079 - \frac{2196}{\tau};$$

$$\therefore\ \tau = 426.6;\ \therefore\ T = -34°.0 \text{ F.};$$

$$\therefore p = 1823.7 \text{ lbs. per sq. ft.}$$

$$= 12.7 \text{ lbs. per sq. in.};$$

and equation (12) gives

$$h_e = 578.66.$$

This is only 1.70 thermal units less than the superior limit above found. This being satisfactory in amount and quality, we now apply it to other cases.

For the state u on the curve of saturation, we have and find

$$v = 24.372.$$

$$\tau = 420.4;\ \therefore\ T = -40°.0 \text{ F.}$$

$$p = 1531.1 \text{ lbs.}$$

$$h_e = 579.67 \text{ B. T. U.}$$

For state m, where the isothermal of 8.1° C. intersects the curve of saturation, we have

$$\tau = 507.24; \therefore T = 46.58° \text{ F.}$$
$$p = 11988 \text{ lbs. sq. ft.} = 83.25 \text{ per in.}$$
$$v = 3.41 \text{ cu. ft.}$$
$$h_e = 526.47 \text{ B. T. U.}$$

For the state for which $v = 8$, we have

$$\tau = 868.7; \therefore T = 8.1° \text{ F.}$$
$$p = 5279 \text{ per ft.} = 36.8 \text{ per inch.}$$
$$h_e = 550.52 \text{ B. T. U.}$$

Assuming the form adopted by Regnault,

$$h_e = d + eT + fT^2; \quad . \quad . \quad . \quad . \quad . \quad . \quad (13)$$

and the results just given enable us to find

$$d = 555.50, \; e = -0.61302, \; f = -0.000219 T^2;$$

and we have *the practical formula for the latent heat of evaporation of ammonia,*

$$h_e = 555.5 - 0.613T - 0.000219T^2. \quad . \quad . \quad . \quad (14)$$

Density of liquid ammonia is given experimentally as follows:

Temp.	Density.	Dif.	Authority.
At 15.5° C.	0.731		Faraday.
− 10	0.6492		D'Andreff: An. (3), 56, 317 (*Smithsonian Contributions*, Vol. XXXII., 1888).
		−63	
− 5	0.6429		
		−75	
0	0.6364		
		−66	
5	0.6298		
		−68	
10	0.6230		
		−70	
15	0.6160		
		−71	
20	0.6089		

These may be expressed very nearly by the formula

$$\delta = 0.6364 - 0.0014\, t$$
$$= 0.6502 - 0.000777\, T, \quad . \quad . \quad . \quad . \quad (15)$$

where t is degrees Centigrade and T degrees Fahrenheit.

Specific volume of liquid ammonia.—If the volume of a pound of water be 0.016 of a cubic foot, then will the volume of a pound of liquid ammonia be, equation (15),

$$v_1 = \frac{0.016}{0.6502 - 0.000\frac{7}{9}\,T} \quad . \quad . \quad . \quad . \quad . \quad . \quad (16)$$

This formula is sufficiently accurate for temperatures between $-5°$ F. and $100°$ F. A mean value gives about 41 pounds per cubic foot.

Specific volume of ammonia vapor.—From *Thermodynamics* we have

$$v_2 - v_1 = \frac{778\,h_e}{\tau\frac{dp}{d\tau}}.$$

Since v_1 is small compared with v_2 it may be omitted, and by the aid of equation (4) we have

$$v = \frac{h_e}{6.4993} \cdot \frac{\tau}{p} \quad . \quad . \quad . \quad . \quad . \quad . \quad . \quad . \quad (17)$$

The volumes in the table of the Properties of Saturated Ammonia at the end of this article were computed from this equation.

Isothermals of ammonia vapor.—If the vapor be saturated, the isothermal will be parallel to the axis of v.

If the vapor be superheated, the equation will be (11), making τ constant.

The general equation of vapors, in which the last term is a function of v only, will be

$$pv = a\tau - \frac{b}{v^n}.$$

Adiabatics of ammonia vapor.—If the vapor be continually *saturated*, the equation of the adiabatic will be a (b), from the other paper, "General Formulas for Vapor Engines," or

$$u = xv = \left(c \log \frac{\tau_1}{\tau} + \frac{x_1\,h_{e1}}{\tau_1}\right) \frac{\tau\,v}{h_e}, \quad . \quad . \quad . \quad (18)$$

in which u is the volume of the vapor and liquid when only the xth part of the liquid is vaporized; but as, in our analysis, the volume of the liquid compared with the vapor is neglected, it really represents the volume of the xth part of a pound of vapor;

c is the specific heat of liquid ammonia, the experimental value of which is not known, but a computed value is about unity, as will be found further on.

If the vapor be superheated, then the general equation of thermodynamics (the writer's work, p. 48),

$$dH = K_v d\tau + \tau \left(\frac{dp}{d\tau}\right)_v dv;$$

and this, reduced by means of equation (10), gives

$$dH = K_v d\tau + \tau \frac{a}{v} dv.$$

But for an adiabatic $dH = 0$;

$$\therefore K_v \frac{d\tau}{\tau} = -a \frac{dv}{v};$$

$$\therefore K_v \log \frac{\tau}{\tau_2} = a \log \frac{v_2}{v};$$

$$\therefore \frac{\tau}{\tau_2} = \left(\frac{v_2}{v}\right)^{\lambda}, \quad . \quad . \quad . \quad . \quad . \quad . \quad . \quad (18)$$

where v_2 and τ_2 are inferior limits, and

$$\lambda = \frac{a}{K_v} = \frac{91}{778 \times 0.3935} = 0.29725.$$

To obtain an equation between p and v, eliminate τ between (18) and (10), giving

$$pv = a\tau_2 \left(\frac{v_2}{v}\right)^{\lambda} - \frac{b}{v^n}. \quad . \quad . \quad . \quad . \quad . \quad . \quad (19)$$

For ammonia gas these become

$$\frac{\tau}{\tau_2} = \left(\frac{v_2}{v}\right)^{0.29725} - \quad . \quad . \quad . \quad . \quad . \quad . \quad . \quad (20)$$

$$p = 91 \frac{\tau_2}{v_2} \left(\frac{v_2}{v}\right)^{1.29725} - \frac{16920}{v^{1.97}} - \quad . \quad . \quad . \quad (21)$$

$$= 91 \frac{\tau_2}{v_2} \left(\frac{\tau}{\tau_2}\right)^{4.3641} - \frac{16920}{v_2^{1.97}} \left(\frac{\tau}{\tau_2}\right)^{6.6274}, \quad . \quad . \quad . \quad (22)$$

the last of which is in terms of p and τ as variables.

Specific heat of ammonia vapor that is continually at the point of saturation.—The general equation for this specific heat is

$$\varphi = c - \frac{h_e}{\tau} + \frac{dh_e}{d\tau}$$

(the writer's *Thermodynamics*, page 147). By the aid of equation (14) above, neglecting powers of T above the first, this becomes

$$s = 1 - \frac{555.5}{\tau},$$

which is negative for all values of τ less than 555 absolute, or 95° F.; hence, for the range of temperatures ordinarily used in engineering practice, the specific heat of saturated ammonia is negative, and the saturated vapor will condense with adiabatic expansion, and the liquid will evaporate with the compression of the vapor, and when all is vaporized will superheat.

Fig. 211

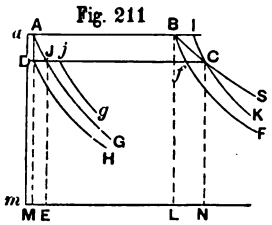

Thus, in Fig. 211, if BCs be the curve of saturation, and the vapor be compressed adiabatically from any point, as C on the curve of saturation, the adiabatic CI will rise above BC, and if it be expanded from the same point it will fall below BC. Equation (21) is the equation of CI, and (18) of CK, the part below C.

Specific heat of liquid ammonia.—Assume the volume mM of the pound of liquid to be constant at all pressures, and let MD be the absolute pressure at the absolute temperature τ, BCs, the curve of saturation, DH, AG, BF, IK adiabatics. Let the vapor be expanded from D at the pressure p and temperature τ until it is all evaporated at state C, thence compressed adiabatically to I, thence compressed at constant pressure to A, where it is liquefied, thence by the abstraction of heat let the pressure be reduced to D; then

$$HDAG + GAIK = HDCK + DCIA.$$

Let the temperature of AB be $\tau + d\tau$, and of I, $\tau + d\tau'$, for the vapor from I to B will be superheated, its temperature increasing

with increase of volume; then, if c be the specific heat of the liquid,

$$\begin{aligned} HDAG &= c d\tau, \\ DCIA &= v dp, \\ HDCK &= J h_e, \\ GAIK &= GABF + FBIK, \\ &= J h'_e + J k_p (d\tau' - d\tau), \\ h_e - h'_e &= - dh_e; \end{aligned}$$

$$\therefore c = -\frac{dh_e}{d\tau} + k_p\left(\frac{d\tau'}{d\tau} - 1\right) + \frac{v}{J}\cdot\frac{dp}{d\tau}. \quad . \quad . \quad . \quad (23)$$

Equation (14) gives, since $d\tau = dT$,

$$\frac{dh_e}{d\tau} = 0.6130 + 0.000438\ T.$$

Differentiating equation (22), after which dropping the subscripts, since the inferior limit is arbitrary and may coincide with DC, then

$$\frac{v}{J}\frac{dp}{d\tau} = 0.5108 - \frac{145.15}{\tau v^{0.97}}.$$

The limit of the ratio $\frac{d\tau'}{d\tau}$ is unity; hence (23) becomes

$$c = 1.1234 + 0.000438\ T - \frac{145.15}{(460.66 + T)v^{0.97}}. \quad (24)$$

For $T = -40°$ F., $v = 24.372$; $\therefore c = 1.091$,
" $T = 8.1°$ F., $v = 8$; $\therefore c = 1.086$,
" $T = 46.58°$ F., $v = 3.41$; $\therefore c = 1.056$,
" $T = 100°$ F., $v = 1$; $\therefore c = 0.976$.

According to formula (24) the specific heat decreases with increase of temperature, a principle which is true of water from 40° F. to about 80° F. This computation assumes that the behavior of the liquid and vapor conforms exactly with the laws assumed; a condition which rarely, if ever, exists. It will therefore be advisable, for engineering purposes, to assume that the specific heat is constant, at least until the experimental value is determined, and equal to that of water—or unity. The results from 0° to 100°, generalized, become

$$c = 1.096 - .0012\ T \text{ nearly}. \quad . \quad . \quad . \quad . \quad (25)$$

The following table has been computed from these formulas:

SATURATED AMMONIA.

Temperature.		Pressure, p.		Heat of Vaporization, Thermal Units. h_e.	External Heat. Thermal Units. $\frac{pv}{J}$.	Internal Heat. Thermal Units. $\rho = h_e \frac{pv}{J}$.	Volume of Vapor per lb., cu. ft. v_1.	Volume of Liquid per lb., cu. ft. v_2.	Weight of a cu. ft. of Vapor Pounds. $\frac{1}{v_1}$.
Degree F. T.	Absolute. τ.	Lbs. per sq. ft.	Lbs. per sq. in.						
− 40	420.66	1540	10.69	579.67	48.25	531.42	24.38	.0234	.0411
− 35	425.66	1778.6	12.31	576.69	48.35	528.34	21.21	.0236	.0471
− 30	430.66	2035.8	14.13	573.69	48.85	524.84	18.67	.0237	.0535
− 25	435.66	2329.5	16.17	570.68	49.16	521.52	16.42	.0238	.0609
− 20	440.66	2656.4	18.45	567.67	49.44	518.23	14.48	.0240	.0690
− 15	445.66	3022.5	20.99	564.64	49.74	514.90	12.81	.0242	.0775
− 10	450.66	3428.0	23.77	561.61	50.05	511.56	11.36	.0243	.0880
− 5	455.66	3968.0	27.57	558.56	50.44	508.12	9.89	.0244	.1011
∓ 0	460.66	4373.5	30.37	555.5	51.38	504.12	9.14	.0246	.1094
+ 5	465.66	4920.5	34.17	552.43	50.84	501.59	8.04	.0247	.1243
+ 10	470.66	5522.2	38.55	549.35	51.13	498.22	7.20	.0249	.1381
+ 15	475.66	6182.4	42.93	546.26	51.33	494.93	6.46	.0250	.1547
+ 20	480.66	6905.3	47.95	543.15	51.65	491.50	5.82	.0252	.1721
+ 25	485.66	7695.2	53.43	540.03	51.81	488.22	5.24	.0253	.1908
+ 30	490.66	8556.4	59.41	536.92	52.02	484.90	4.73	.0254	.2111
+ 35	495.66	9493.9	65.93	533.78	52.22	481.56	4.28	.0256	.2336
+ 40	500.66	10512	73.00	530.63	52.42	478.21	3.88	.0257	.2577
+ 45	505.66	11616	80.66	527.47	52.62	474.77	3.53	.0260	.2832
+ 50	510.66	12811	88.96	524.30	52.82	471.44	3.21	.02601	.3115
+ 55	515.66	14102	97.93	521.12	53.01	468.01	2.93	.02603	.3412
+ 60	520.66	15494	107.60	517.93	53.21	464.76	2.67	.0265	.3745
+ 65	525.66	16994	118.03	515.33	53.40	461.82	2.45	.0266	.4081
+ 70	530.66	18606	129.21	511.52	53.67	457.95	2.24	.0268	.4664
+ 75	535.66	20339	141.25	508.29	53.76	454.70	2.05	.0270	.4878
+ 80	540.66	22192	154.11	504.66	53.96	450.75	1.89	.0272	.5291
+ 85	545.66	24172	167.86	501.81	54.15	447.75	1.74	.0273	.5747
+ 90	550.66	26295	182.8	498.11	54.28	443.70	1.61	.0274	.6211
+ 95	555.66	28566	198.37	495.29	54.41	440.95	1.48	.0276	.6756
+ 100	560.66	30980	215.14	491.50	54.54	437.35	1.36	.0277	.7353

DISCUSSION.

The President, H. R. Towne.—The increasing use of ammonia machines makes data of this kind exceedingly valuable and interesting.

Prof. Denton.—I might say that this experiment on an ice machine that I reported last evening affords data to confirm a

figure somewhere near to 580. This is the latent heat of ammonia at low pressure and low temperature. But unfortunately for the higher pressure I do not dare to say that the experiment affords a check, but the 580 or thereabouts is entirely confirmed by my experiment on a large scale, and I shall show it up in the appendix. The reason I cannot give the latent heat in the higher pressures is because it depended upon the measurement of water, and it will be seen from my paper that that is not done with the same accuracy as the brine, so that I shall not commit myself with a figure for latent heat until I have a chance to verify it. I would like to say that arrangements are now almost perfected to determine the latent heat in the laboratory, and I expect to be able to help Prof. Wood out on it in an experimental way before long.

Prof. Wood.—It will be a satisfaction to have the constants of ammonia re-determined experimentally, but I have so much confidence in the correctness of Regnault's experiments and of the application of the theory of gases, that I will question experimental results that differ much from those here given within the volumes experimented upon by Regnault; that is, between 10 and 25 cubic feet per pound. Where the volume is 11.3 cubic feet, the temperature of saturation will be about 10° F. below zero, and the latent heat of vaporization about 560 B. T. U. Equation (12) will give more accurate results than equation (14), although the latter is made to pass through three states of the former.

Ledoux found for the latent heat of vaporization when given in British units,

$$h_e = 583.33 - 0.5499\,T - 0.001173\,T^2,$$

and this compared with equation (12) above, shows that our equation, within working limits, gives smaller values than Ledoux, and that it decreases more rapidly with increase of temperature.

CCCXLIII.

SOME PROPERTIES OF VAPORS AND VAPOR ENGINES.

BY DE VOLSON WOOD, HOBOKEN, N. J.
(Member of the Society.)

By vapors we mean saturated vapors, or such as have a definite pressure for a given temperature independent of their volume. We propose to consider cases in which there is a mixture of vapor and its liquid, discarding, however, the volume of the liquid, and in case of the engine discarding clearance and compression. Rankine, Clausius, and others have solved some cases under those restrictions, but their results are not generally applicable alike to vapors having specific heats of opposite signs. We propose to generalize the expressions, and possibly give some new properties of adiabatics.

Consider only one pound of fluid in the cylinder, and let BC be the curve of saturation, and EF any adiabatic in which there is only a fraction of the pound that is vapor throughout the expansion.

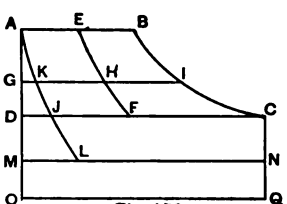

Fig. 150.

AB (Fig. 150) will represent the volume of a pound of vapor at the absolute pressure $OA = p_1$ and absolute temperature τ_1, GI the volume at the absolute temperature τ and pressure $OG = p$.

Let $x_1 = AE \div AB =$ the fractional part of the pound at the state E.

$v_1 = AB$, $x_1 v_1 = AE$.

$x = GH \div GI$.

$v = GI$, $x v = GH$.

h_e, the latent heat of evaporation at temperature τ in ordinary heat units, which will be

h_{e1}, at temperature τ_1, and

c, the specific heat of the liquid.

Then will the equation of the adiabatic EF be

$$GH = x\,\nu = \left(c \log_e \frac{\tau_1}{\tau} + \frac{x_1 h_{e1}}{\tau_1}\right) \frac{\tau \nu}{h_e}, \quad . \quad . \quad . \quad . \quad (a)$$

which may be put under the more symmetrical form

$$\frac{x h_e}{\tau} + c \log \frac{\tau}{\tau_0} = \frac{x_1 h_{e1}}{\tau_1} + c \log \frac{\tau_1}{\tau_0} = a\ constant, \quad (b)$$

in which τ_0 is any arbitrary temperature. Since the vapor is to be continually saturated, this equation is limited to the conditions that x_1 must not be negative, and must be less than 1, and at the same time x, for any amount of expansion, must be less than 1.

Let subscript $_2$ be used for the terminal state F, then,

$$\frac{x_2 h_{e2}}{\tau_2} + c \log \frac{\tau_2}{\tau_0} = \frac{x_1 h_{e1}}{\tau_1} + c \log \frac{\tau_1}{\tau_0}.$$

The difference between the initial and terminal weights of vapor will be

$$x_1 - x = x_1 - \left(c \log \frac{\tau_1}{\tau_2} + \frac{x_1 h_{e1}}{\tau_1}\right) \frac{\tau_2}{h_{e2}}, \quad . \quad . \quad . \quad . \quad (c)$$

and this may be negative, zero, or positive. Rankine and Clausius independently discovered the fact that steam condensed when expanded adiabatically, and that this is true for all vapors the specific heat of whose saturated vapors are negative, and the reverse for those which are positive. The former we will designate as "steam-like vapors," and the latter as "ether-like vapors"—*steam* and *ether* being typical of their respective classes.

The principle stated by these eminent writers is known to be correct—both by theory and experiment—when the initial state is that of pure saturated vapor; but when liquid is present with the vapor in the initial state, it may not be true, for we will show that, with steam-like vapors, *evaporation*, instead of *condensation*, may take place during some part of adiabatic expansion. This is best shown numerically. Let the fluid be water, then $c = 1$, and let $x_1 = 0.436$ at $\tau = 800°$ F. (absolute), $h_e = 1436.8 - 0.7\,\tau$. Then equation (a) gives

$$\begin{aligned} \text{for } \tau &= 900°, & x &= 0.404, \\ \tau &= 800°, & x &= 0.436, \\ \tau &= 700°, & x &= 0.450, \end{aligned}$$

$$\begin{aligned} \text{for } \tau &= 650, & x &= 0.453, \\ \tau &= 600, & x &= 0.450, \\ \tau &= 500, & x &= 0.436, \\ \tau &= 400, & x &= 0.407, \\ \tau &= 200, & x &= 0.277; \end{aligned}$$

from which it appears that steam *increased* with the expansion as the temperature fell from 900° to 650°, or from 340° to 190° on the Fahrenheit scale; and after that it decreased continually with the temperature. This change of the weight of steam can take place only by the evaporation of water initially in the presence of the vapor, and by condensation later in the expansion. The converse is also true, that if, in the initial state, only a fraction of the fluid be vapor, the liquid may at first be evaporated by adiabatic compression, but it may reach a state beyond which *it will be condensed by adiabatic compression.* Thus, in the example above given, if at 600° F. (absolute) 45 per cent. of the fluid be vapor, it will increase to 45.3 per cent., after which it will *condense indefinitely with adiabatic compression.*

If at 650° there be 45.3 per cent. of steam, the vapor will condense both by adiabatic compression and expansion from that state.

This may be illustrated by the annexed diagram (Fig. 151), in which the relations are greatly exaggerated. Let $D\ E\ F$ represent successive states of constant steam weight, and $A\ B\ C$ an adiabatic of part liquid and vapor. These curves may intersect each other at two points a and b; above a the weights of vapor in the adiabatic will be less than at a, and the adiabatic will lie to the left of $D\ E\ F$, and below b it will lie below the curve of constant steam weight. The adiabatic is less curved than the curve of constant steam weight.

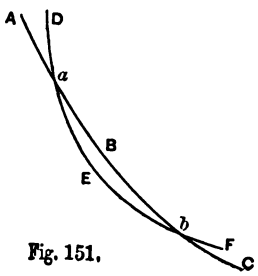

Fig. 151.

To find the minimum weight of vapor such that, by continued compression of steam-like vapor, the liquid will be continually evaporated.

In equation (b) first find the value of τ that will make the left number a minimum when $x = 1$. Neglecting all powers of τ above the first in the latent heat of evaporation, and Regnault's experiments give

$$\frac{h_e}{\tau} = \frac{a}{\tau} - b,$$

when a and b are constants depending upon the particular fluid. Using this value, it will be found that the required function is a minimum for

$$\tau = \frac{x}{c};$$

that is, τ will be near the "temperature of inversion," which, in the case of steam, is about 1436° F. (absolute), or 976° F. actual. Since the law of the latent heat of evaporation here given is not exact, and, even if it were, Regnault's experiments would not warrant the extension to such high temperatures, we will discard the fraction, and treat the entire number, 1436, as if it were exact. Since the adiabatic law is not applicable above this state, the maximum condensation by adiabatic expansion will be found by beginning at this state and expanding down to the required temperature. In equation (c), letting $x_1 = 1$, $\tau_1 = 1436$, $h_{e1} = 1436 - 0.7\,\tau$, $c = 1$, then

$$1 - x = 1 - \frac{2.3026 \log_{10} \frac{1436}{\tau} + 0.3}{\frac{1436}{\tau} - 0.7}$$

	Abso. Temp.	Per cent. of Steam.	Per cent. of Water.	Temp. Deg. F.
If	$\tau = 800$,	$x = 0.808$,	$1 - x = 0.192$,	340.
	$= 700$,	$x = 0.753$,	$1 - x = 0.247$,	240.
	$= 672$,	$x = 0.725$,	$1 - x = 0.265$,	212.
	$= 600$,	$x = 0.692$,	$1 - x = 0.308$,	140.

It thus appears that if 72½ per cent. of the fluid be saturated steam, or 26½ per cent. of it be water at 212° F., the steam will condense continually by adiabatic expansion, or the water be continually evaporated by adiabatic compression. If there be less than twenty-six per cent. of water at 212°, the water will all become evaporated before the temperature reaches the critical temperature, and, after passing that state, compression will produce superheating. In a mixture of steam and water, every adiabatic is tangent to some curve of constant steam weight; and hence, with the exception of the adiabatic tangent to the curve of saturation, will have a state of maximum steam weight, at which point the curves of constant steam weight and the adiabatic will have a common tangent. From this state condensation of steam will result from compression as well as from expansion. The adiabatic which is tangent to the curve of saturation passes through the state of the temperature of inversion.

According to the preceding table, at $\tau = 672°$, if $72\frac{1}{2}$ per cent. is steam, compression will produce evaporation up to 1436°. If at $\tau = 672°$ we assume 70 per cent. of steam, we find the following results:

$\tau = 672,$	$x = 0.70.$
$\tau = 700,$	$x = 0.73.$
$\tau = 800$	$x = 0.76.$
$\tau = 900,$	$x = 0.794.$
$\tau = 1000,$	$x = 0.825.$
$\tau = 1100,$	$x = 0.849.$
$\tau = 1200,$	$x = 0.855.$
$\tau = 1250,$	$x = 0.860.$
$\tau = 1300,$	$x = 0.859.$
$\tau = 1400,$	$x = 0.84.$
$\tau = 1436,$	$x = 0.83.$

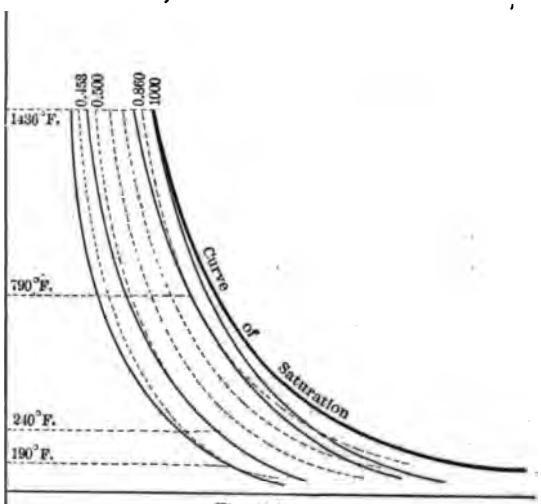

Fig. 152.

In Fig. 152 the dotted lines are curves of equal steam weights, and the full lines—except the curve of saturation—are adiabatics, one of which is tangent to the curve of saturation; another tangent to the curve whose constant steam weight is 86 per cent., the point of tangency being at the temperature of 790° F.; another is tangent to the curve of 50 per cent. of steam at 240° F.; and the fourth tangent to the curve of 45.3 per cent. of steam at 190° F. absolute.

In order to show the properties on a small scale, it is necessary

to exaggerate the relations, thus distorting what would be the correct figure.

An examination of ether will show that the results here deduced for steam are not necessarily applicable to other vapors. In "ether-like vapors" the temperature of inversion is below the ordinary temperatures; and for such if $x_1 = 1$, condensation will result from adiabatic compression for temperatures above that of inversion. Thus, for ether, omitting terms above the first power of τ, we have:

$$h_e = 93.3214 + 0.3870\ \tau.$$

$$c = 0.517.$$

$$s = 0.517 - \frac{93.32}{\tau} = \text{specific heat of the saturated vapor.}$$

$\tau = 180°$ (absolute), or $-280°$ F., when $s = 0$; and this is the temperature of inversion. Assuming any temperature above this, as $\tau_1 = 520°$, and $x_1 = 1$ in equation (a), then

$$x = \frac{0.5664 - 2.3026 \log \frac{\tau}{520}}{\frac{93.3214}{\tau} + 0.3870}.$$

From this it appears that x will diminish as τ increases, and finally become zero for $\tau = 915°$, nearly.

I do not find any proportion of vapor to liquid such that they will be the same at two different states on an adiabatic, as has been found for steam. It may be shown that for any value of x_1, x will decrease as τ increases, showing that reëvaporation does not take place during adiabatic compression. If the fluid be initially all liquid, then $x_1 = 0$, which in equation (a) gives for the equation of $A\ J$, Fig. 150,

$$x\,r = \frac{\tau r}{h_e} \log \frac{\tau_1}{\tau}, \quad . \quad . \quad . \quad . \quad . \quad . \quad . \quad (e)$$

or,

$$x = \frac{\tau}{h_e} \log \frac{\tau_1}{\tau}. \quad . \quad . \quad . \quad . \quad . \quad . \quad . \quad (f)$$

This expression may in some cases have a maximum, from which it appears that if the fluid be initially all liquid, under adiabatic expansion the liquid may be evaporated until the temperature is so reduced as to produce the maximum weight of vapor, after which the vapor will condense.

Thus, for steam $c = 1$, and if $\tau_1 = 800$, x will be a maximum for $\tau = 350°$ (absolute), nearly, at which state x will be 0.24, or 24 per cent. of the liquid will have become vapor. At 300°, $x = 0.239$; for $\tau = 200°$, $x = 0.21$. All these latter temperatures are, however, so much below any used in practice, that it is not probable that the formula for evaporation will be applicable; and we may assert, that, within practical limits, steam will be continually generated under adiabatic expansion, if in the initial state the fluid be entirely liquid.

With ether, if initially liquid, evaporation will increase with adiabatic expansion until it all becomes saturated vapor, after which it will superheat; provided that the liquid becomes vapor before the temperature of inversion is reached.

The numerical values of these results will be modified in some cases considerably—if higher powers of the temperature be included in the analysis; but my object is to indicate general results, rather than particular values.

The ratio of expansion will be

$$r = \frac{DF}{AE} = \frac{x_2\, v_2}{x_1\, v_1} \quad . \quad . \quad . \quad . \quad . \quad . \quad . \quad . \quad . \quad (g)$$

If, in the initial state of expansion, at E, the fluid be all vapor, as it may be for steam-like vapors, then $x_1 = 1$, and reducing by means of equation (a) we have

$$r = \left(c \log \frac{\tau_1}{\tau_2} + \frac{h_{e1}}{\tau_1}\right) \frac{\tau_2}{h_{e2}} \cdot \frac{v_2}{v_1} \quad . \quad . \quad . \quad . \quad . \quad . \quad (h)$$

For ether-like vapors, if the final state is that of vapor only, then $x_2 = 1$, and substituting x_1 from equation (a) gives

$$r = \frac{v_2\, h_{e1}}{\left(\frac{h_{e2}}{\tau_2} - c \log \frac{\tau_1}{\tau_2}\right) \tau_1\, v_1} \quad . \quad . \quad . \quad . \quad . \quad (i)$$

The weight of *ether* vapor at B, the beginning of expansion in order that the pound of fluid shall be all vapor at C, the end of the expansion, will be x_1 in equation (a) when $x = 1$, or

$$x_1 = \left(\frac{h_{e2}}{\tau_2} - c \log \frac{\tau_1}{\tau_2}\right) \frac{\tau_1}{h_{e1}} \quad . \quad . \quad . \quad . \quad . \quad . \quad . \quad (j)$$

In practice, the adiabatic expansion of steam-like vapors may be approximately realized, but there is well-nigh an insuperable difficulty in securing the adiabatic expansion of saturated ether-like vapors: for, in the former case, if steam be in the state of saturation at the instant of the cut-off, it will continue to be saturated during expansion; but, with the latter, if no ether liquid be present at the instant of cut-off, the vapor will superheat during expansion, and instead of realizing equation (a), the curve of expansion will be of the form

$$p\ v^n = a\ constant,$$

in which n will be the ratio of the specific heat at constant pressure to that at constant volume, but probably will not be 1.405 as for perfect gases. We will continue to consider the vapor as saturated.

To find the work done during adiabatic expansion, let x_1 be so much less than unity that the vapor will remain saturated throughout expansion, then will

$$U_1 = AEFD = \int GH.\ dp = J\int \left[c \log \frac{\tau_1}{\tau} - \frac{x_1 h_{e1}}{\tau_1} \right] \frac{\tau v}{h_e} dp$$

$$= J\int_{\tau_2}^{\tau_1} \left[c \log \frac{\tau_1}{\tau} + \frac{x_1 h_{e1}}{\tau_1} \right] d\tau$$

$$= J\left[c\left(\tau_1 - \tau_2 - \tau_2 \log \frac{\tau_1}{\tau_2}\right) + \frac{\tau_1 - \tau_2}{\tau_1} x_1 h_{e1} \right]. \quad (k)$$

If, in this expression, the value of x_1 from equation (a) be substituted, and subscript $_2$ be attached to those variables which are without subscripts, we will have

$$U_1 = J\left[\left(\tau_1 - \tau_2 - \tau_1 \log \frac{\tau_1}{\tau_2}\right) + \frac{\tau_1 - \tau_2}{\tau_2} x_2 h_{e2} \right], \quad (l)$$

the former of which, equation (k), is better adapted to the discussion of steam-like vapors, and equation (l) to ether-like vapors; for in the former x_1 may be unity, and in the latter x_2 may be unity.

Eliminating $\log \frac{\tau_1}{\tau_2}$ from these equations by means of equation (a) gives

$$U_1 = J\left[c\,(\tau_1 - \tau_2) + x_1 h_{e1} - x_2 h_{e2} \right], \quad . \quad . \quad . \quad . \quad (m)$$

in which for steam-like vapors x_1 may be unity, but x_2 must be less than unity; and, on the contrary, for ether-like vapors x_2 may be unity, but x_1 less than unity.

If, during the return stroke, the fluid be refrigerated so as to maintain the constant temperature $_2$, the pressure will be uniform and equal OD; and if at some point, as J, adiabatic compression begins and is continued until the temperature is raised to τ_1 at A, let x_3 be the weight of vapor at state A, then will the work done by compression be found by simply changing x_1 to x_3, since all the other quantities remain as before:

$$\therefore\ U_2 = J\left[c\left(\tau_1 - \tau_2 - \tau_2 \log\frac{\tau_1}{\tau_2}\right) + \frac{\tau_1 - \tau_2}{\tau_1} x_3\, h_{e1}\right]; \qquad (n)$$

hence the work done in the cycle $AEFJA$ will be

$$U_1 - U_2 = J\frac{\tau_1 - \tau_2}{\tau_1} h^{e1}\left(x_1 - x_3\right).$$

The heat absorbed will be

$$Jh_{e1}\left(x_1 - x_3\right);$$

hence, the efficiency will be

$$E = \frac{U_1 - U_2}{Jh_{e1}\,(x_1 - x_2)} = \frac{\tau_1 - \tau_2}{\tau_1},$$

which is the same as that of the perfect elementary engine.

To find the work done during adiabatic expansion when the initial state A is that of liquid only, make $x_3 = 0$ in the value of U_2, or $x_1 = 0$ in equation (k), giving

$$U_3 = Jc\left[\tau_1 - \tau_2\left(1 + \log\frac{\tau_1}{\tau_2}\right)\right]. \quad . \quad . \quad . \quad . \quad . \quad (o)$$

Actual engines do not expand down to the back pressure, neither is the pound of fluid retained in the cylinder; but at the end of the expansion the exhaust is opened, and the vapor escapes until the exhaust is closed at the point L in the back stroke. The adiabatic

AL will then be for only a fraction of a pound. Neglecting compression and clearance, we have

$$U = ABCNMA = ABCD + (p_2 - p_3)\, x_2\, v_2,$$

where $p_2 = OD$, $p_3 = OM$, absolute pressures. If τ_4 be the temperature of the feed water, the heat supplied will be

$$H = Jc(\tau_1 - \tau_4) + x_1 H_{e1},$$

where $H_{e1} = Jh_{e1}$. Hence the efficiency will be

$$E = \frac{J\left[c\left(\tau_1 - \tau_2 - \tau_2 \log \frac{\tau_1}{\tau_2}\right) + \frac{\tau_1 - \tau_2}{\tau_1} x_1 h_{e1}\right] + (p_2 - p_3) x_2 v_2}{J\left[c\,(\tau_1 - \tau_4) + x_1 h_{e1}\right]}. \quad (p)$$

From this result it appears that in the case of actual engines, the specific heat of the working fluid and the latent heat of evaporation both affect the efficiency. If the feed water be at the temperature of the exhaust, then $\tau_4 = \tau_2$, and the preceding expression may be reduced to

$$E = \frac{\tau_1 - \tau_2}{\tau_2} - \frac{c\,\tau_2\left(\log \frac{\tau_1}{\tau_2} - \frac{\tau_1 - \tau_2}{\tau_1}\right) + \frac{1}{J}\left(p_2 - p_3\right) x_2\, v_2}{c\,(\tau_1 - \tau_2) + x_1 h_{e1}},$$

a form not new. By retaining x_1 and x_2, equation (p) is applicable both to "steam-like" and "ether-like" vapors, only observing that neither x_1 nor x_2 can exceed unity, and that they are related to each other through equation (a).

DISCUSSION.

Prof. Denton.—Prof. Wood, in this last paper, has gone into a great many computations about the liquefaction of steam from the theoretical standpoint, which are certainly very interesting to the student. I believe he has carried them much farther than any previous writer. As a little contribution to the practical value of these computations for steam-engine practice, I am minded to tell a story about a card. I see two gentlemen in this

room who will probably recall having seen it before, but perhaps the rest have not. A few years ago very few people had noticed this fact. Suppose we have an indicator card cutting off at about one-fifth in an ordinary non-condensing engine, so as to expand say to the atmospheric line, say from 80 pounds boiler pressure. Now, such a card will have a mean effective pressure of somewhere around 25 pounds. I have trusted to my memory for that. Then the work we get out of the steam is this 25 pounds to the square inch times 144 pounds, times the volume of this steam, which is somewhere about 26 cubic feet. That will be the foot-pounds of work we get out of that card for a pound of steam. Without going into it too fine, it is somewhere about ninety thousand foot-pounds. Now, it was as I say, some years back, a common idea, and I had it myself, that this heat was accounted for by the difference of heat in the steam. The total heat of steam at 80 pounds is somewhere around 1210 thermal units. At atmospheric pressure it is 966 + 212, or about 1180. The difference is only 25 thermal units. If you multiply by Joule's equivalent to get it into foot-pounds, we have about 20,000 foot-pounds accounted for, against 90,000 of actual work, by the card. Therefore the heat which the steam contains at the higher pressure less the heat that it contains at the lower pressure does not begin to account for the work we know we get from the actual indicator card. Unless this theory of liquefaction comes to our aid, there is no possible explanation for it. This theory of liquefaction, you observe, does not depend upon cylinder condensation at all. Suppose this is absolutely a non-conducting cylinder, then, by these theories which Prof. Wood has reviewed so ably, it turns out that by adiabatic expansion alone ten per cent. of the fluid liquefies and gives up all its latent heat in order that the rest may remain vaporous steam. Now, ten per cent. of that latent heat is 90 thermal units, which multiplied by the 772 gives us about 70,000. This,* added to the 20,000, gives us what we get from the card, viz., 90,000 ft. lbs. But you see, unless we have this theory of liquefaction, we do not begin to account for what occurs at all. This liquefaction by the adiabatic expansion was a great discovery. That was the situation of steam-engines probably most of us know at the time of Regnault's experiments. Regnault's experiments were waited for by everybody all over the scientific world. These theories of liquefaction had not been perfected.

* The exact calculation is given in the *Am. Engineer*, Nov. 7th, 1884.

When Regnault's experiments were published, scientists immediately put this sort of computation against the actual steam-engine measurement, and it did not begin to account for the actual performance of steam-engines. The German experimenter Hirn had measured steam-engines and found that they did give these 90,000 units between these two points, and theory only accounted, by Regnault's experiments, for the 20,000 units, and it was under the stimulus of this discrepancy that Rankine and Clausius discovered these mathematical laws of liquefaction and brought the two facts together.

By arrangement with Prof. Wood, I offer the following practical deductions regarding volatile vapor engines, based upon such equations as his paper discusses.

The computation of the table is to be credited to Prof. D. S. Jacobus, of Hoboken.*

It applies to engines whose indicator cards would be like the accompanying figure (Fig. 210), *EA* representing clearance volume, the compression line *DA* being arranged to compress to boiler pressure before the valve opens for admission, and the terminal pressure being that of the atmosphere, with the point of release assumed at exactly the end of the stroke.

Under these conditions, the influence of clearance on economy is entirely eliminated, and if the efficiency be computed without regard to cylinder condensation, we shall obtain the maximum economy that can be expected to be realized between the pressures chosen, and yet we shall have introduced no condition inconsistent with the use † of a vapor in a modern high-pressure engine. Column 7 of the table expresses the fraction of the heat in the vapor (when it enters the working cylinder) which is realized as work, or which is represented by the indicated horse-power computed from the diagram *ABCDA*. It will be seen that these fractions are practically the same for all the vapors. Leaving the air out of consideration for the present, let us consider the reason for this absence of difference of economy of the vapors, notwithstanding that there is so much difference in their boiling points, latent heat, etc.

* "Efficiency of Vapor Engines," *Stevens Indicator*, Oct., 1888.

† The latest applications of bisulphide of carbon, ammonia, etc., as a motive fluid, do not afford a back pressure practically less than the atmosphere, notwithstanding a condenser is used. For this reason, Prof. Jacobus confines his calculations to the diagram which exhausts against a pressure equal to that of the atmosphere.

Thus, steam boils at 212°, ammonia at minus 27°. Steam requires about twice the heat for the generation of a pound of its vapor that ammonia does. Again, ether, which boils at 95°, requires but 0.55 as much heat to change the temperature of its liquid one degree as does liquid water, and but about one-fifth as much heat to generate a pound of its vapor. Evidently there must be some very general neutralizing element underlying the effect of such widely differing properties upon the efficiency of a vapor, when used as a medium for the transformation of heat into work in an engine, and my object is to suggest a view of the subject which will bring this element into prominence.

The useful effect or "efficiency of fluid" given in column 6 is simply the quotient of the mean effective pressure of the diagram *ABCDA*, divided by the heat possessed by as much vapor as

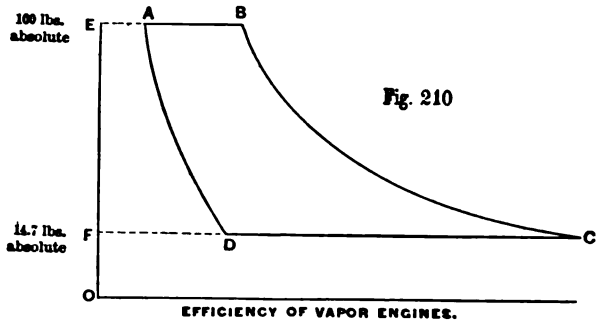

Fig. 210

will fill the volume *AB*, or the displacement of the engine-piston up to the point of cut-off.

Now, the expansion line *BC*, and the compression line *DA*, differ so little for all these vapors, that the mean effective pressure differs no more than is due, say, to the variation of expansion lines in indicator cards of various steam-engines, from the Mariotte law of expansion or compression.

For practical purposes, therefore, the mean effective pressure, or the numerator of the efficiency value is the same for all the vapors for equal ratios of expansion. But the heat which must be expended is far less in the cases of some of the vapors than in the case of steam for equal *weights* of substance, such heat being given in column 5 of the table.

If, for example, the space or piston displacement *AB*, when filled with ether vapor at 100 pounds pressure, contained as much

weight of ether as it would of steam, then the efficiency of ether would be represented by a fraction whose numerator would be the same as that for steam, but whose denominator would be less in the proportion of 195 to 1,002. In other words, the ether would be about five times as economical as steam. But the weight of a cubic foot of ether is nearly as much greater than steam as is 1,002 greater than 195. That is, to fill the volume AB with vapor of ether would take about as many times more pounds of ether as the heat to vaporize the latter is less than the heat to vaporize water.

Hence, to obtain a *given horse-power* from an engine, both the numerator and denominator of the efficiency value are practically equal for steam and ether, and the same principle is the cause of the close identity of the values in column 7 for other vapors, and extends also to air.*

As a general principle, therefore, we may say that substances more volatile than water—in the sense of requiring less heat for the vaporization of a given weight—produce vapors so much more dense than steam, that, to produce *equal horse-powers* in a given engine, as much greater weight must be used of a vapor as is roughly represented by the ratio of the heat of its vaporization to that of steam; whereby the economy, neglecting differences of cylinder condensation, is practically the same for all common volatile substances as for steam. Experiments with naphtha and ammonia indicate that there may be less cylinder condensation with ammonia and naphtha than with steam—when the former are used so that they expand from a highly *superheated* condition, and the latter is used without superheating, so that a loss of upwards of 33 per cent. of the theoretical consumption of steam takes place through cylinder condensation. Line 3 of the table applies to the case of ammonia used as a superheated gas, distilled from an aqua ammonia solution. A practical application of ammonia for motive power purposes is being carried out on this principle. The use of ammonia in its saturated condition

* The air cycle covered by the table is what is known as Joule's Engine. See Art. 276, Rankine's Steam Engine. The air taken from the atmosphere is compressed along DA to 465° Fahr. and 100 pounds pressure. It is then passed through the furnace, and heated at constant pressure to 607° Fahr., the volume thereby becoming increased by the amount AB. Expansion then occurs along BC, whereby the temperature falls to 160°, and at this temperature the air is exhausted to the atmosphere.

is, of course, impossible if it is to be condensed, and its waste thereby prevented. No means of condensing it at *minus* 27° Fahr. exists. It was proposed to use ammonia in such a cycle, however, some years since in the Gamgee or zero motor, which offered to boil the ammonia by the natural heat of the sea-water, and expand it to —27°, and return it to the boiler by some means never clearly defined, and yet unknown.

Experiment also has shown, in a satisfactory manner, that the rate of conduction of heat from the furnace to the liquid in the boiler is greater per square foot of heating surface per hour in the case of highly volatile substances, such as ammonia, naphtha and bisulphide of carbon, than for steam. This fact makes it possible to produce a given horse-power with less boiler capacity or heating surface than with steam; but it should be noted that the total heat expended per hour, or the economy, is not affected by this circumstance. The first cost of boiler plant will be less, but the heat which must be supplied to the vapor per horse-power will be practically the same as for steam, as per columns 6 and 7 of the table. Should steam be superheated, so that cylinder condensation may be eliminated, its economy will exceed that of any of the substances in the table, except air.

The difficulties of preventing superheaters for steam from deteriorating have thus far so offset the extra economy known to result from their use that no general use of superheated steam is now being attempted. The high temperatures involved in the use of air-engines (which are known to actually realize most of the high economy promised by theory) have proved an insurmountable obstruction to their competition with steam. The use of volatile vapors, as substitutes for steam, involves objections quite as serious as these. To maintain a back pressure equal to that of the atmosphere requires an amount of water about equal to half that which affords 27 inches vacuum, with steam.

Hence, to compete with the non-condensing steam engine in cities where water is worth, say, $1.50 per 1,000 cubic feet, the vapor-engine will require an expense for water about equal to that of fuel. Besides this fact, the difficulties of controlling the escape of vapor, so that no offensive odors result, and the unknown difficulties due to boiler deposits and corrosion, are such as to make it extremely improbable that the world will ever permit itself to be educated to the use of a substance of this character in place of its elected favorite,—steam.

THEORETICAL ECONOMY OF VARIOUS VAPORS USED AS HEAT MEDIUMS IN A GIVEN ENGINE AT FIXED CUT-OFF, THE EXPANSION BEING SUFFICIENT TO CAUSE A FALL OF PRESSURE FROM 100 TO 14.7 LBS. PER SQUARE INCH. MEAN BACK PRESSURE 14.7 LBS.

Substance used as a Heat Medium.	Specific Heat in Liquid Condition.	Temperature in Degrees Fahrenheit at pressures per square inch of		British Thermal Units necessary to be expended in order to generate 1 pound of vapor from "temp. of feed" equal to that given in column 4.	Efficiency or Fraction of Heat Expended per column 5, which can be realized as useful work in an engine.	Coal per hour per indicated horse-power assuming the boiler to utilize 8,000 heat units per pound of coal. Cylinder condensation neglected—in lbs.	Probable coal per hour per H. P. including allowance of ½d for cylinder condensation for saturated vapors, and zero for superheated vapors—in lbs.
		100 lbs.	14.7 lbs.				
1	2	3	4	5	6	7	8
Steam	1.00	328	212	1002	0.14	2.3	3.1
Ammonia, saturated	0.99	56	—27	632	0.15	2.15	2.88
" superheated	0.99	282	8	940	0.13	2.48	2.48
Ether	0.55	215	95	195	0.15	2.15	2.88
Carbon Bisulphide	0.24	248	115	163	0.17	1.99	2.68
Air — worked as in Joule's Engine. See Rankine's "Steam Engine," p. 373	0.24	607	70	160	0.46	0.70	0.70

Mr. F. H. Ball.—I will say that I think this is very interesting indeed, and as I understand the matter, these substances, ammonia, ether, bisulphide of carbon and so on, would be just as much more expensive to use as the difference between their cost and the cost of water, unless, of course, they were condensed and used again. And then there would be all the difficulties of handling which are encountered, which make them more expensive than water. Is that correct?

Prof. Denton.—Yes, sir. In attempting to run a condenser with bisulphide of carbon, they never get the back pressure below the atmosphere.

Prof. Wood.—In regard to the efficiencies, I have verified all except that for ether. In regard to the condensation that Prof. Denton referred to, you all know better than I the great difficulties involved in it, and its intricate character. But I would like to point out still more exactly, if possible, the fact that we have to consider first initial condensation, that is, the condensation in the cylinder up to the point of cut-off. Then, what Prof. Denton said in regard to 10 per cent. of condensation after that is a low figure compared with many investigations. For instance, I went through an investigation—theoretically—where the initial pressure was 100 pounds, and I found for ten expansions there was nearly 14 per cent. of condensation. Now, in order to get this result, the walls of the cylinder must be non-conducting, no heat going in and none going out. This condition is essential. If I remember correctly, Prof. Rankine, after he discovered this theory, made a computation in which the expansion was very large, carrying it down to actual atmospheric pressure, and he found that 18 per cent. would be condensed if the steam at the point of cut-off was dry saturated steam. Now, I wish to emphasize the fact, that without any cooling from the walls of the cylinder, without refrigeration, after cut-off if we have pure saturated steam doing work against pressure, we get this large amount of condensation. When Prof. Denton spoke of it, I raised the question again, How is it, if there was so much condensation, that the adiabatic line rises above the conventional equilateral hyperbola? It is due to the fact that water is present with the steam at the point of cut-off, and the formulæ which I have presented are intended to cover all these cases. The results deduced from the formulæ involved the condition of wet as well as dry steam at the point of cut-off.

Mr. Nason.—I would like to ask Prof. Wood if he could give us the latest authority on the specific heat of steam.

Prof. Wood.—The specific heat of steam was determined with very great accuracy by Regnault. No one presumes to go back of that. It came out very accurately with the three experiments he made, and the mean of them was almost exactly $\frac{48}{100}$.

Prof. Denton.—I once studied Regnault's experiments very carefully, and he never touched anything but atmospheric pressure. We have a theoretical deduction in Zeuner. It never has been determined, I am pretty sure, for any other pressure.

Mr. Nason.—I asked for its value at 212 degrees.

Prof. Wood.—If Prof. Denton implies that Zeuner *computed* the specific heat of steam at constant pressure, I think he is in error; for Zeuner distinctly states that he considers it constant at constant pressure, and appeals to Regnault's experiments to confirm his position; and then proceeds to *compute* it at *constant volume.*

Mr. Parker.—I would like to ask Prof. Denton to explain the difference in efficiency, and how it is accounted for. I do not understand just how he explained that air showed a percentage of efficiency so much larger, which disappeared in practice—why air shows a so much larger percentage of efficiency, yet gives no better results. In other words, how the second law of thermodynamics, which takes the general ground that the efficiency of any heat-engine is a question of the range of temperature, and not of the medium through which it acts, how in the case of air the efficiency of 43 per cent. is placed on the same basis as in the other cases.

Prof. Denton.—You mean that it is not practically successful?

Mr. Parker.—Not practically successful.

Prof. Denton.—Air-engines have always given, in all cases in which they have been constructed and tried, these higher efficiencies shown there. That particular engine was never constructed; but if it was constructed, there is no reason to doubt that it would have given that efficiency, because the other cycles of air, Ericsson and Stirling, did give an efficiency which was superior to steam. They have all failed because they failed to pack cylinders at that high temperature, 460 degrees. That has been the difficulty—that they burned out their packing. That has constantly overcome all efforts to make them a success. The

Ericsson engine could never have been used to compete with steam-engines, because it was too large. It took a good deal more space compared with steam-engines. By the way, it is a popular idea that that is the real reason that air-engines could not be used on a large scale. That is not so. The Stirling air-engine was the smallest engine for its power that we had ever known, except in torpedo service. There is no question of cumbrousness of air. If you could handle high temperatures, you could work it. As an actual fact, the Stirling engine of 50 horse-power was run with 75 square feet of heating surface, which is less than any steam-engine yet used. There was no trouble about the size; but the piston and furnaces burned out so often that, with steam on our side to turn to as a successful alternative, the thing was dropped.

Prof. Wood.- It is a well-known fact that the specific heat of the steam or other fluid is not involved in a realization of the second law.

I wish to present some points contained in Professor Denton's remarks in a different light. He says:

"If the piston displacement *AB*, when filled with ether vapor at 100 pounds pressure, contained as much *weight* of ether as it would of steam, then the efficiency of the ether would be about five times that of steam."

I assume that the writer did not intentionally write this as here printed—that the words "ether" and "steam" should be transposed; for the weight of a cubic foot of ether vapor is about 1.03 pounds at 100 pounds pressure, and of a cubic foot of steam, 0.23 of a pound, making the vapor about four and a half times as heavy as that of steam for the same volume; so that, when the same volume is filled with the respective fluids, there will be some four or five times as much *weight* of the vapor of ether as of steam. The relation is correctly used afterwards.

The fact that the densities of vapors are *inversely* nearly as their latent heats of evaporation at their boiling points under the pressure of one atmosphere is well known.

Admitting that the above extract read correctly, it would contain a physical impossibility. It is impossible to put into a given space the same weight of steam as of the vapor of ether at 100 pounds pressure. I understand that the assumption was merely for the sake of illustration, but it necessitates the further assumption that all other properties remain unchanged.

In my paper, in establishing the general expressions for work and efficiency, I followed the usual mode of finding the work done per *unit of weight.* The density of the fluid was not considered—neither does it enter into the investigation. A pound of fluid, as a medium, will do a given amount of work, and four and a half pounds will do four and a half times as much under the same conditions; but the efficiency will be the same in both cases. The density of the vapor affects the size of the cylinder that is to develop a given power. The volume of a steam cylinder must be more than four times that of an ether cylinder, to contain the same weight of vapor. When the work done per pound of vapor and the density of the vapor are known, the volume of the cylinder may be determined. If, then, the density of the vapor does not enter the analysis, how does it appear that the efficiencies of the several vapors are so nearly the same? Our object in writing is to answer this question, and do it in an approximate way, so as to avoid delicate analysis. We desire to show that it is due chiefly to the fact that, if a larger amount of heat is expended in producing the higher pressure in one fluid than in another, a larger amount in that case will be rejected than in the other. To be more specific, steam at the pressure of 100 pounds is at a higher temperature, and contains more thermal units than ammonia, ether or bisulphide of carbon at the same pressure, and if our proposition is correct, the temperature of steam at exhaust will be higher than for any of the others, and it will contain more thermal units, the terminal pressure being that of one atmosphere. The following table shows these relations:

Substance.	Temperatures, Deg. Fahr. at Pressures, lbs. per sq. in.		British Thermal Units in the vapor above the boiling point.	
	100	14.7	Initial.	Terminal.
Steam	328	212	1,002	966
Saturated Ammonia	56	—27	612	572
Saturated Ether	215	95	206	162
Saturated Carbon Bisulp.	248	115	163	153

		Deg. F.
Steam loses	328 − 212 =	116
Ammonia loses	56 + 27 =	83
Ether loses	215 − 95 =	120
Bisulphide Carbon	248 − 115 =	133

It will be observed that the temperature of the steam at exhaust, 212, is the highest of these four vapors, and that the initial temperature, 328, is also the highest. The *initial* thermal units of the steam, 1,002, is also the highest, and the thermal units in the steam at *exhaust*, 966, is also the highest. This general law exists with all vapors, and is one of the most influential elements in determining the efficiency, but not the only one.

My paper shows that an *approximate* value of the efficiency in these cases is

$$E = \frac{\text{Difference of temperatures}}{\text{Highest temperature added to 460}}.$$

Applying this to the cases above, we have:

Substance.	Difference of temp., Deg. F.	Highest temp. added to 460	Approximate efficiency E.	Theoretical efficiency.
Steam	116	788	0.15	0.14
Ammonia	83	516	0.16	0.15
Ether	120	675	0.18	0.15
Bis. Carbon	133	708	0.19	0.17

The approximate efficiencies exceed only a little the theoretical ones, and it follows that the controlling elements are difference of temperature, and the initial temperature increased by 460. If the difference of temperatures is small, as for ammonia (83), the higher temperature (56) is so much lower than for steam that the efficiency is actually higher.

Messrs. Gantt and Maury, in their thesis upon vapor-engines, considered a variety of conditions, and worked out in detail all the important results flowing therefrom (*Van Nostrand's Engineering Magazine*, Nov., 1884, p. 413). The following is an abstract of one of their tables, in which the initial pressure was 120 pounds per square inch, and the final 10 pounds. Some of the results for ether are too small, due to their considering the specific heat as negative, like the other vapors, whereas it is positive within the limits used:

SUBSTANCE. Vapor of	Initial Pressure. Lbs. per sq. in. p.	Terminal Pressure. Lbs. per sq. in. p_2.	Initial Temperature. Deg. Fah. T.	Terminal Temperature. Deg. Fah. T_2.	Weight of a cubic ft. of the vapor at the temperature T. W_1.	Latent heat of evaporation at the temp. T in British Thermal units, etc. h_e.	Specific heat of the liquid. c.	Volume of vapor at end of expansion, the initial volume being unity. v_2.	Work done per cubic foot of vapor from temp. T. W.	Total heat in ft. lbs. supplied per cubic foot of vapor. H.	Efficiency of the fluid per cent. 100 W÷H= E.	Relative size of the cylinders to produce the same power from each vapor. M.	Pounds of vapor necessary to produce one horse-power per hour between 120 lbs. & 10 lbs. pressure. W.
Water.....	120	10	342	195	0.317	873.1	1.000	9.37	49,940	272,813	18.30	1.000	11.44
Alcohol.....	120	10	291	157	0.834	313.2	0.871	9.92	54,196	300,000	18.06	1.071	30.48
Ether	120	10	230	77	1.400	135.0	0.569	12.06	44,800	324,000	13.85	1.768	89.24
Bis. of Carbon.	120	10	266	96	1.399	126.0	0.249	9.00	35,545	179,000	19.75	1.480	78.15
Chloroform ...	120	10	286	121	2.171	94.7	0.242	10.29	47,609	232,000	20.46	1.264	90.30

CCCXLIV.

FORMULAS FOR SATURATED AND SUPERHEATED VAPORS.

BY DE VOLSON WOOD, HOBOKEN, N. J.

(Member of the Society.)

SOME fifty formulas or more have been proposed by different writers to represent the relation between the temperature and pressure of saturated steam. Regnault used the general form

$$\log p = a + b\,\alpha^n + c\,\beta^m \quad . \quad . \quad . \quad . \quad (a)$$

for all the vapors experimented upon by him, and Rankine used the form

$$\log p = A - \frac{B}{\tau} - \frac{C}{\tau^2} \quad . \quad . \quad . \quad . \quad . \quad (b)$$

A few formulas have been proposed to represent superheated vapors that shall hold good down to the state of saturation; among which the most celebrated is one deduced by Zeuner, of the form

$$pv = R\tau - Cp^n \quad . \quad . \quad . \quad . \quad . \quad . \quad (c)$$

This gives values agreeing remarkably well with those found by observation and experiment.

Vapors, when considerably superheated, approximate so nearly to the condition of a perfect gas that it is questionable whether there is any advantage in any formula that may be devised over that of the well-known one for perfect gases,

$$pv = R\tau \quad . \quad . \quad . \quad . \quad . \quad . \quad . \quad (d)$$

Thus, to illustrate, M. Hirn found that the specific volume of steam at 200° C. under a pressure of three atmospheres was 0.697, and at the same temperature under a pressure of four atmospheres was 0.522; and if the steam were a perfect gas the latter

should be three fourths the former; or $\frac{3}{4} \times 697 = 0.5227$. The agreement is as near as could be expected. (The values for superheated steam are taken from Röntgen's *Thermodynamics*, Du Bois's translation, p. 280 of old edition, 570 of the new.) At one atmosphere and 141° C. the specific volume is, according to Hirn, 1.85, and according to the law of perfect gases it should be, at five atmospheres and 205° C.,

$$v_1 = \frac{1 \times 1.85 \times (205 + 273.7)}{5 \times (141 + 273.7)} = 0.427,$$

but it was observed to be 0.422, an error of about three per cent. A greater error would naturally be expected in this case than in the former one, since the lower pressure and temperature were so low there would be comparatively little superheating. A comparison of the examples above one atmosphere will show that they agree more nearly with the law of perfect gases.

The specific volume of saturated steam is given with considerable accuracy by the empirical formula

$$pv^{\frac{16}{15}} = a\ constant. \quad . \quad . \quad . \quad . \quad . \quad (e)$$

Since the law of change between the state of saturation and that of a highly saturated vapor is not known, any formula representing the law of change will be more or less empirical.

It may be considered as an imperfect fluid, in which case, if Rankine's formula for imperfect fluids be accepted, the equation of the gas would be

$$pv = R\tau - a_0 - \frac{a_1}{\tau} - \frac{a_2}{\tau^2} - \text{etc.} \quad . \quad . \quad . \quad . \quad (f)$$

in which $R = \frac{p_0 v_0}{\tau}$, a_0, a_1 etc., are inverse functions of the specific volumes; p the pressure of one atmosphere, τ the absolute temperature of melting ice, and v the corresponding specific volume. The law of change in this formula in the terms after $R\tau$ depends upon an inverse function of v, whereas in Zeuner's the third term is a direct function of p. It would therefore appear, if Zeuner's equation is correct, or the nearest correct, that Rankine's formula must be erroneous, and the hypothesis upon which it is founded—that of "Molecular Vortices"—will be of questionable

validity. It is admitted at the outset that this theory or hypothesis is not an accepted part of science; but Rankine's formulas have, generally, such a wide application, and as this one equation (f), in his opinion, represents the results of Regnault's experiments, I have desired to see how well it could be made to represent the states of saturation and superheating. Aside from the interest involved in testing Rankine's hypothesis, the use that can be made of such an equation, if well established, may be seen from the study of M. Ledoux in determining the probable latent heat of ammonia by the use of Zeuner's equation.

I have spent much labor upon this problem, and, although the work is not yet complete, I desire to place on record some of my results.

An exact coincidence of results between theory and experiment is not to be expected. There are always errors in experiments, which, though small, exclude the possibility of expressing the law representing those results exactly. Then, too, the constants entering our theoretical equations are not known *exactly*, though the limits of uncertainty are comparatively small. Thus, the mechanical equivalent of heat used in Rankine and Zeuner's time was 772; now 778 is known to be nearer correct, and the absolute zero then used was 461.2° Fahr., but now 460.66° Fahr., below 0°F., is believed to be nearer correct. These differences are of the slightest importance in ordinary practice, but are not to be ignored in a critical study of the subject. Prior to the publication of Professor Peabody's *Steam Tables*, I computed the specific volumes of steam in the cases where I wished to use them, by means of Rankine's equations, using the constants above given, and later compared the results with Peabody's tables, and found that the greatest discrepancy was less than 0.02 of a cubic foot; and had I used as many decimals as he did, I cannot say but there would have been even less discrepancy. Considering that he used Regnault's formulas, such an argument could hardly have been anticipated, and the result not only confirms the correctness of Rankine's formula, but shows it to be the more desirable, since it is the more simple. I have used Peabody's tables in all the following computations. If the new constants were used, the results from Zeuner's equation would not agree so closely with the results obtained from the mechanical theory as Zeuner's computations seemed to make them, although they would even then be sufficiently accurate for practical purposes.

First, I tried Rankine's formula under the form

$$pv = R\tau - \frac{b}{\tau v}$$

without obtaining satisfactory results.

Next I tried the form

$$pv = R\tau - \frac{b}{v^n}.$$

Selecting three points on the curve of saturation of known pressure, temperature, and volume, I found—

$$R = 96.95, \qquad b = 18{,}473, \qquad n = 0.22\,;$$

and, changing the value of b somewhat arbitrarily, the equation became

$$pv = 96.95\tau - \frac{18{,}500}{v^{0.22}} \quad . \quad . \quad . \quad . \quad . \quad . \quad (g)$$

in which p is in pounds per square foot, v the volume in cubic feet, and τ the absolute temperature on the Fahrenheit scale. By means of this equation the following table was computed for saturated steam :

TABLE I.

Specific Volume cu. feet.	Temperature.		Pressure.			Fraction of error. Columns 5 and 6.
	Degrees F.	Absolute.	Pounds per sq. in.	Pounds per sq. foot.		
				Calculated. Eq. (24).	Tabular value.	
v.	T.	τ.	p'.	p'.		
90.31	153.1	613.76	4	583	576	$+\frac{1}{81}$
53.37	176.9	617.56	7	1013	1008	$+\frac{1}{201}$
26.58	212.0	672.66	14.7	2116	2116.2	0
7.10	292.5	753.16	60	8597	8640	$-\frac{23}{60}$
5.42	311.8	772.46	80	11462	11520	$-\frac{1}{199}$
4.40	327.6	778.26	100	14550	14400	$+\frac{1}{96}$
2.83	363.4	824.06	160	23030	23040	$-\frac{1}{1664}$
2.294	381.7	842.36	200	28882	28800	$+\frac{1}{360}$
1	2	3	4	5	6	7

The results are fair, the greatest error being about 1.2 per cent., some being greater and some less than the tabular values of the pressures corresponding to the specific volumes. The volumes

here assumed are those found from assumed values of temperature and pressure according to the mechanical theory.

The following table was computed from the same formula for superheated steam:

TABLE II.

SUPERHEATED STEAM, EQ. (g).

Specific Volumes.		Temperature.			Pressure, lbs. per Square Foot.		Errors.
Cu. metre per kilo.	Cu. ft. per lb.	C.	T Fah.	τ.	Computed Eq. (24).	Tabular.	
1.85	29.929	141	285.8	746.46	2146	2116.2	$+\frac{1}{70}$
0.697	11.163	200	392.0	852.66	6435	6348	$+\frac{1}{72}$
0.5752	9.212	246	474.8	935.46	8721	8464	$+\frac{1}{34}$
0.414	6 631	205	401.0	861.66	10759	10530	$+\frac{1}{89}$

These errors are not only larger than those in Table I., but err all in the same sense,—the computed values being too large.

Next, the exponent n was assumed as $\frac{1}{4}$, and a new determination of the constants R and b was made, involving some conditions for superheated steam, resulting in the equation

$$pv = 93.8\,\tau - \frac{16300}{v^{\frac{1}{4}}} \quad . \quad . \quad . \quad . \quad . \quad (h)$$

The two following tables have been computed from this formula

TABLE III.

SATURATED STEAM, EQ. (*h*).

Volumes Cu. Ft.	Temperatures.		Pressures.			Errors.	
	T Fah.	τ absolute.	Computed lbs. per sq. ft.	Tabular lbs. per sq. ft.	Lbs. per sq. in	Differences.	Ratio.
204.40	120	580.66	245.37	241.92		3.45	$\frac{1}{70.12}$
90.31	153.09	613.75	578.912	576	4	2.912	$\frac{1}{179.80}$
53.37	176.90	637.56	1007.56	1008	7	—.44	$-\frac{1}{2290.9}$
26.58	212	672.66	2103.71	2116.8	14.7	— 13.1	$-\frac{1}{161.58}$
10.37	267.13	727.79	5707.18	5760	40	— 52.82	$-\frac{1}{109.04}$
7.096	292.51	753.17	8548.48	8640	60	— 91.52	$-\frac{1}{94.40}$
5.425	311.80	772.46	11387.35	11520	80	— 132.65	$-\frac{1}{86.845}$
4.403	327.58	788.24	14236.74	14400	100	— 163.26	$-\frac{1}{88.202}$
3.711	341.05	801.71	17099.55	17280	120	— 180.45	$-\frac{1}{95.76}$
3.212	352.85	813.51	19966.28	20160	140	— 193.72	$-\frac{1}{104.06}$
2.833	363.40	824.06	22849.59	23040	160	— 190.41	$-\frac{1}{121.00}$
2.535	372.97	833.63	25750.11	25920	180	— 169.89	$-\frac{1}{152.56}$
2.294	381.73	842.39	28671.13	28800	200	— 128.87	$-\frac{1}{223.48}$
2.096	389.84	850.50	31598.28	31680	220	— 81.72	$-\frac{1}{387.66}$
1.928	397.41	858.07	34571.64	34560	240	+ 11.64	$+\frac{1}{2969.07}$
1.785	404.47	865.13	37561.50	37440	260	+ 121.50	$+\frac{1}{308.14}$

TABLE IV.

SUPERHEATED STEAM, EQ. (*h*).

Specific Volumes.		Temperatures.		Pressures lbs. per sq Ft.		Errors.	
Cu. metr's	Cu. ft.	T °F.	τ Absolute	Calculated.	Tabular.	Differences.	Ratio.
1.74	27.932	245.3	711.96	2137.12	2116.2	+ 20.83	$+\frac{1}{101.15}$
1.85	29.698	285.8	746.46	2122.55	2116.2	+ 6.35	$+\frac{1}{333.25}$
0.697	11.188	392.00	852.66	6351.57	6348.6	+ 2.97	$+\frac{1}{2137.57}$
0.4822	7.7407	329.00	789.66	8306.42	8464.8	—158.38	$-\frac{1}{53.44}$
0.522	8.379	392.00	852.66	8401.03	8464.8	— 63.77	$-\frac{1}{132.73}$
0.5752	9.233	474.8	935.46	8490.16	8464.8	+ 25.36	$+\frac{1}{333.78}$
0.3758	6.0327	324.5	785.16	10484.07	10581.0	— 96.93	$-\frac{1}{109.16}$
0.414	6.6459	401	861.66	10633.33	10581.0	+ 52.83	$+\frac{1}{200.28}$

These results for superheated steam are very satisfactory, with one exception, and for saturated vapor are not quite as good as those in Table I.

Mr. E. R. Dawson computed the pressures from each of the three following formulas for temperatures from 212° F. to 365° (Graduation Thesis, 1888, Stevens Institute of Technology):

$$pv = 96.95\,\tau - \frac{18500}{v^{0.22}}. \quad . \quad . \quad . \quad . \quad . \quad (A)$$

$$pv = 96.95\,\tau - \frac{19712}{v^{1/4}}. \quad . \quad . \quad . \quad . \quad . \quad (B)$$

$$pv = 93.61\,\tau - \frac{17420}{v^{1/4}}. \quad . \quad . \quad . \quad . \quad . \quad (C)$$

A comparison of the results thus obtained with those in steam tables caused a rejection of formula (C), and a preference for formula (B). A further discussion of the subject led to the adoption of the following formula:

$$p = 0.6734\,\frac{\tau}{v} - \frac{136.88}{v^{\frac{5}{4}}} - 0.16 \quad . \quad . \quad . \quad (D)$$

in which p is the pressure in pounds per square inch, and v the volume of a pound in cubic feet.

The following are the results of computations from formula (D)

TABLE.

SATURATED STEAM.

Temperature.	Pressures.		Error.
Deg. F.	From table.	Eq. (D.)	
212	14.70	14.72	+0.02
221	17.53	17.56	+0.03
230	20.80	20.83	+0.03
239	24.54	24.58	+0.04
248	28.83	28.86	+0.03
257	33.71	33.73	+0.02
266	39.25	39.26	+0.01
275	45.49	45.49	0.00
284	52.52	52.49	−0.03
293	60.40	60.37	−0.03
302	69.21	69.16	−0.05
311	79.03	78.96	−0.07
320	89.86	89.81	−0.05
329	101.9	101.83	−0.07
338	115.1	115.14	+0.04
347	129.8	129.76	−0.04
356	145.8	145.84	+0.04
365	163.3	163.44	+0.04

This agreement is practically exact. The computed and tabular pressures agree more nearly than those in different steam tables.

Applying this formula (D) to superheated steam, I find the following results:

TABLE.

SUPERHEATED STEAM.

Temp.		Volumes cu. ft.	Pressure lbs. per sq. ft.		Errors.	
Deg. F.	Absolute.		Eq. D.	Tabular.	Dif.	Per cent.
285.8	746.46	29.629	2134.5	2116.2	+18.5	0.87
392.0	852.66	11.163	6416	6348	+68	1.07
474.8	935.46	9.212	8594	8464	+130	1.54
401.0	861.66	6.631	10722	10580	+142	1.35

This agreement, though fair, is not as close as is desirable for steam. We have, thus far, found no formula that represents both saturated and superheated steam as accurately as Zeuner's, but we have not yet exhausted the availability of Rankine's formula.

It is certain that by using three, or more, terms of the equation, results may be found having any required degree of accuracy.

Wüllner, in his *Lehre von der Wärme*, p. 668, gives a formula of Herwig's on the density of saturated vapors, which is

$$v_1 = \frac{pv}{p_1 \times 0.0595\sqrt{\tau}},$$

in which v_1 is the volume in cubic meters of one kilogram of saturated vapor at the absolute temperature τ, p_1, the tension of the vapor in millimeters of mercury at that temperature; while p and v represent the pressure and volume that the vapor would have at that temperature if it obeyed Mariotte's law; hence $pv = R\tau$ where R is a constant.

Substituting above, and dropping the subscripts, we have

$$v = \frac{A}{p}\sqrt{\tau},$$

where A includes all the constant elements of the equation. I have tested this equation by the use of the most modern steam tables, by determining the value of A, which is

$$A = \frac{vp}{\sqrt{\tau}};$$

and if the formula is exact, the values thus found for A should be constant. I find for

$v = 1.785$	$A = 15.778$
$v = 2.294$	$A = 15.807$
$v = 2.833$	$A = 15.790$
$v = 26.58$	$A = 15.065$
$v = 90.31$	$A = 14.581$
$v = 103.$	$A = 15.682$
	Mean... .... 15.450

The difference between the largest of these and the smallest is very nearly $\frac{1}{13}$ of the value of the largest; and aside from the value given for $v = 90.31$, the error is about 5 per cent. of the largest. The formula then is not nearly so accurate as other formulas in use, and for steam $pv^{\frac{10}{9}}$ = a constant is more desirable.

Equation (c) Zeuner reduced to the following:

$$pv = 0.0049287 - 0.187815\sqrt{p},$$

in which the constants were determined for $\tau_0 = 273°$ C. = 491°.4 F. absolute, and the mechanical equivalent of heat 428. Modern values of $\tau = 492.66$ F., and $J = 432.1$, would change these somewhat, and also produce a change in the numbers of the following table. The third column in the following table, and the fourth column in the table for superheated steam, were computed from the preceding formula:

TABLE.

SATURATED STEAM.

Pressure in Atmosphere.	Specific Volume of Saturated Steam by Mech. Theory of Heat.	Specific Volume of Saturated Steam by Zeuner's Equation.
0.1	14.552	14.677
0.2	7.543	7.583
0.5	3.171	3.181
1	1.6504	1.6506
2	0.8598	0.8583
3	0.5874	0.5861
4	0.4485	0.4474
5	0.3636	0.3630
6	0.3064	0.3060
7	0.2652	0.2650
8	0.2339	0.2339
9	0.2095	0.2096
10	0.1897	0.1900
11	0.1735	0.1739
12	0.1599	0.1601
13	0.1483	0.1489
14	0.1383	0.1383

This agreement is practically exact. The computed and tabular pressures agree more nearly than those in different steam tables.

Applying this formula (D) to superheated steam, I find the following results:

TABLE.

SUPERHEATED STEAM.

Temp.		Volumes cu. ft.	Pressure lbs. per sq. ft.		Errors.	
Deg. F.	Absolute.		Eq. D.	Tabular.	Dif.	Per cent.
285.8	746.46	29.629	2134.5	2116.2	+18.5	0.87
392.0	852.66	11.163	6416	6348	+68	1.07
474.8	935.46	9.212	8594	8464	+130	1.54
401.0	861.66	6.631	10722	10580	+142	1.35

This agreement, though fair, is not as close as is desirable for steam. We have, thus far, found no formula that represents both saturated and superheated steam as accurately as Zeuner's, but we have not yet exhausted the availability of Rankine's formula.

It is certain that by using three, or more, terms of the equation, results may be found having any required degree of accuracy.

Wüllner, in his *Lehre von der Wärme*, p. 668, gives a formula of Herwig's on the density of saturated vapors, which is

$$v_1 = \frac{pv}{p_1 \times 0.0595\sqrt{\tau}},$$

in which v_1 is the volume in cubic meters of one kilogram of saturated vapor at the absolute temperature τ, p_1, the tension of the vapor in millimeters of mercury at that temperature; while p and v represent the pressure and volume that the vapor would have at that temperature if it obeyed Mariotte's law; hence $pv = R\tau$ where R is a constant.

Substituting above, and dropping the subscripts, we have

$$v = \frac{A}{p}\sqrt{\tau},$$

where A includes all the constant elements of the equation. I have tested this equation by the use of the most modern steam tables, by determining the value of A, which is

$$A = \frac{vp}{\sqrt{\tau}};$$

CCCXLV.

NOTE ON THE STEAM TURBINE.

BY J. BURKITT WEBB, HOBOKEN, N. J.
(Member of the Society.)

If steam is to be used in turbines, it will be well to have clear conceptions of the fundamental principles of their construction and action. Judging from various papers before this Society, and the discussions upon them, and from similar productions met with elsewhere, the subject is but imperfectly understood. Some of these papers, indeed, claim that standard writers on the subject have been poorly informed thereupon, and have fallen into errors detected (only too) readily by their authors; while others admit that the standard authors are or may be right, but claim that their presentation of the subject is faulty.

I shall not now attempt to discuss all the principles laid down by Rankine and others, but wish to call attention to one of special interest in connection with the steam turbine, in the hope of provoking an interesting discussion thereon.

When steam flows out from under a considerable pressure it attains a very high velocity. In the production of this velocity the steam expands from the high to the low pressure, and the mechanical energy thus produced, and existing in the form of kinetic energy in the moving steam, would seem to be obtained with a high degree of economy. The problem, therefore, is to some extent the same as in a water turbine: having given a stream of fluid at a certain velocity, to abstract as much as possible of the energy from it by allowing it to react upon a moving wheel. Now the primary condition of economy is that the fluid shall leave the wheel with only enough velocity left in it to get it out of the way; and, in the case of the steam turbine, this requires an almost if not quite impracticable velocity for anything like a great difference of pressures.

The subject not only includes a consideration of that form of passages through the wheel which will allow it to move with the least velocity, but of the best method of constructing it to resist

centrifugal force, and how to balance and lubricate it. The advantages of a successful turbine are too apparent to need mention, and I hope to hear of progress in this direction.

DISCUSSION.

Mr. Ambrose Swasey.—I would like to speak of a steam-turbine on which a gentleman is working in Cleveland. I had occasion to cut some gearing for it some little time ago, and I would say that he has run it up to twenty-five thousand revolutions per minute. I do not take any one else's statement for that; I timed it with an indicator. He has run the turbine for several months, developing a great deal of power with it. It is about six inches in diameter, and he uses the steam expansively, on a similar principle to the one mentioned by Prof. Webb; but he has a very high velocity, the highest I ever saw. In fact, I did not suppose that gearing could be run as fast. The size of the large gear is twelve inches in diameter, about twenty pitch, and the pinion is one inch in diameter. The first one was made of rawhide, and that lasted pretty well; but the heat from the steam softened it after a while, and then we got one of vulcanized fibre. That has done very hard work and has worked for a long time. 18,000 is the usual speed for it.

Prof. Webb.—Did the gentleman stay near it himself?

Mr. Swasey.—It stood on a table geared up to run, and I stood very near to it, and he was running it at 19,000 when I first indicated the speed; and he said he had run it that way for several days. I said, "How fast have you run it?" and he opened the valve and let it go at 25,000. It was a simple matter to indicate its speed, because it was all geared up. All I had to do was to indicate one of the shafts.

Prof. Denton.—What is the diameter of the largest rotating part?

Mr. Swasey.—About six inches; the steam is taken in the center and there is a stationary disk on each side, so that the wheel is perfectly balanced. He has developed, as he claims, as much economy as a common slide-valve engine at that speed. It was certainly very interesting to me, because I did not suppose that it could be run as fast as that.

Prof. Webb.—Will you state just how the gearing is proportioned?

Mr. Swasey.—The gears are 20 pitch, one inch face; the pinion is vulcanized fibre, and the gears are 12 inches in diameter and of bronze. There are two of them, one on each side. He had considerable trouble about the shaft heating in the first place; but then he made it hollow, and arranged it so that it drew the air through the center; moreover, the shaft is connected in such a way that no pressure comes on the bearings. The shape of the series of blades is such that as steam passes from one to the other it gets to a larger diameter, and so on, so that the steam is used expansively. The size of the shaft is about seven sixteenths of an inch.

Prof. Denton.—As I understand, this machine has one theoretical advantage and one theoretical disadvantage. The phenomena of cylinder condensation, which in a reciprocating engine we know is the great expense of steam, is here eliminated, I believe. In the reciprocating engine we have the cooling of the surfaces at exhaust and the condensation during admission. There is no such action there; but there must be some friction in going from each of those sections to the other. I did not hear Prof. Webb speak of that—whether that friction is not lost. But the disadvantage I see in the device is the clearance that those vanes must have in the casing. That rotating vane must clear that casing, in going at that speed, by some sensible amount. There must be considerable clearance allowed to keep it from touching the sides. Now, the slightest clearance on such a circumference will waste lots of steam. I have in mind a rotary engine of the ordinary style carrying a revolving vane on a hub, and the latter is the dividing line between the exhaust side and the live steam side. Now, one thirty-second of an inch variation of distance between the hub and the abutment will let through 250 pounds of steam an hour, or 80 lbs. of steam per hour per H. P. The hub is 5 inches long. In other words, you have a crack there about $\frac{1}{32}$ of an inch by 5 inches. That is the sole cause of the rotary engine using more steam than an ordinary engine. There is no mystery about rotary engines using more steam than others. It is nothing but leakage. I have made this rotary engine go just as well as an ordinary slide-valve, by fitting it closely and then let it come back to this leaky state, and you get your consumption up again.

Prof. Webb.—I understand from Mr. Swasey that we do not know exactly the shape of the vanes of the Cleveland turbine, and I want to make the suggestion that the speed of the turbine might be lowered by altering the shape of the vanes. As to leakage, I

suppose, if it is built properly there need be no more than one thousandth of an inch clearance, and then there would not be much steam escaping past the ends of the vanes. Perhaps fifteen to twenty-five thousand revolutions will not prove necessary, because the compound principle of these turbines affords a means of reducing the speed; by increasing the number of rings of vanes the speed can be reduced.

Prof. Wood.—I would like to ask Mr. Swasey whether the enlargement for expansion was along or parallel to the axis, or whether the steam passed around and then radially outward.

Mr. Swasey.—There are concentric disks. The steam passes from a smaller disk to one of larger diameter, but on a radial plane.

Prof. Webb.—Since the adjournment of the Erie meeting, I have learned the following particulars about the Dow steam-turbine.

Steam passes radially outward through a succession of buckets and passages, there being six compoundings. The diameter of the working wheels is $5\frac{3}{8}$ inches, spindle or shaft $\frac{5}{8}$ of an inch diameter, weight of moving parts 7 lbs. 7 oz.; highest measured speed, 35,000 revolutions per minute (so that the outer circumference traveled nearly 9 miles per minute). In pumping water with a boiler pressure of 70 lbs., it was estimated, from the work done, that it developed 20 horse-power with less than 27 pounds of wet steam per horse-power per hour.

For the benefit of those who have given no attention to this subject, I will briefly describe two successful steam-turbines.

One of these was used many years since to run a wood-planer, and, being coupled directly to the shaft, it ran at the same speed, or at about 4,000 revolutions per minute. It was essentially a Barker's mill run by steam, no attempt being made to use it expansively. Now, the speed was much too low for an economical use of the steam; but, as there was an abundance of shavings for fuel, this was a small disadvantage, and the simplicity and convenience of the thing made it successful. (A more detailed description of this wheel and its mode of action was given with the assistance of previously prepared blackboard sketches and simple calculations of the amount of steam used and the horse-power produced.)

Rankine refers to this wheel in his *Steam Engine*, page 538, in the following words:

"The Reaction Steam Engine, in a rude form, is described in the *Pneumatics* of Hero of Alexandria. It was improved and

brought into use to a limited extent by Mr. Ruthven. Its principle and mode of action are analogous to those of a reaction water wheel.

"The FAN STEAM ENGINE, invented by Mr. William Gorman, is analogous in its principle and mode of action to an *inward flow* water-turbine. An engine of this kind was used at the Glasgow City Saw Mills, and was considered equal in efficiency to an ordinary high-pressure engine."

Successful steam-turbines are now being built in England in which the expansion of steam from 150 lbs. boiler pressure to that of the atmosphere is utilized. Two such turbines may be seen in operation on the steamer *City of Berlin.* They are duplicates, each one of them capable of running the three hundred or more incandescent lights that are used. The horse-power of each turbine is about thirty, and they run at some nine thousand revolutions per minute. The maximum diameter of the revolving part is about nine inches, and the shaft is coupled directly to the armature of the dynamo, which is in line with it and runs at the same speed. The whole machine, including the dynamo, occupies seven or eight feet in length by eighteen inches square.

(A detailed description was given with the assistance of previously prepared blackboard sketches. Those who desire further information can find cuts and description in *Industries*—London and Manchester, Friday, January 13, 1888, Vol. IV., No. 81.)

APPENDIX.

The following facts with respect to the flow of steam and centrifugal force may be of interest:—

In Rankine's *Steam Engine*, page xiv, is the following:

"Outflow of steam. When the external absolute pressure is less than 3-5ths of the internal, calculate the outflow as if the external absolute pressure were equal to 3-5ths of the internal.

"For a rough approximation, let p_1 be the internal and p_2 the external absolute pressure; q, the weight of outflow per unit of area per second; then, when $p_2 =$ or $< \frac{3}{5} p_2$, $q = p_2 \div 70$ nearly; and when $p_2 > \frac{3}{5} p_2$,

$$q = (p_2 \div 42) \sqrt{(p_1 - p_2) \div \tfrac{2}{3} p_2}."$$

On page 564 of the same work is a table of the number of cubic feet in a pound of steam for all pressures.

Assuming, then, $p_2 = 15$ lbs. per sq. inch, and p_1 equal successively to higher pressures up to 140 lbs. per square inch, we can calculate the number of lbs. q of steam flowing into the atmosphere for the various values p_1 of boiler pressures, and by means of the table we may turn the pounds into cubic feet. The latter values multiplied by 144 give the velocities of outflow in feet per second.

The following diagram shows the result of such a calculation:

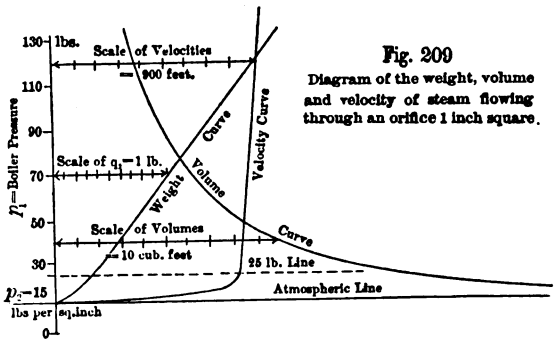

Fig. 209
Diagram of the weight, volume and velocity of steam flowing through an orifice 1 inch square.

It will be seen that for all boiler pressures above 25 lbs. absolute the velocity of issuing steam is above 800 feet per second. Now, if the periphery of a turbine one foot in diameter is to have this speed, the number of revolutions per minute must be at least 15,000, and such a turbine ought to have about the same economy as an engine with no expansion.

A couple of simple calculations of the centrifugal force in such a wheel may be of interest.

First.—Suppose a wheel one foot in diameter to have projections around its circumference, like teeth in a spur gear. Let each projection or tooth be a cube of one inch on each side, so that the metal contained in it is a cubic inch, and the section which must give way when it flies off is one square inch. Suppose the weight of the cubic inch to be a quarter of a pound, then the centrifugal force of each tooth is, roughly,

$$\frac{W}{g} \cdot \frac{V^2}{R} = \frac{.25}{32.2} \cdot \frac{900^2}{.5} = 12{,}500 +$$

so that the material would need to have a tensile strength of over 12,500 lbs. per square inch for such a wheel to run 15,000 per minute without the teeth flying off by centrifugal force, and for a speed of 30,000 the tensile strength would need to be four times as great.

Second.—Suppose instead of the teeth a ring of metal were put around the wheel, the cross section of the ring being one square inch. The centrifugal force for each cubic inch of the ring would be the same as before, 12,500 lbs., which would be the same as an internal bursting pressure of 12,500 lbs. per square inch. Multiplying this by the radius, six inches, there results 75,000 lbs. for a rough value of the tensile strength per square inch of a ring capable of withstanding the centrifugal force of 15,000 revolutions per minute.

The effect of centrifugal force will also appear in the enlargement of the diameters of the parts when running, which will require suitable allowances to be made for such enlargement. Such allowances can easily be calculated for special forms of rotating parts.

CCCXLVI.

THE DISTRIBUTION OF STEAM IN THE STRONG LOCOMOTIVE.

(*Supplementary Paper.*)

BY F. W. DEAN, CAMBRIDGEPORT, MASS.

(Member of the Society.)

A YEAR ago I had the honor of reading a paper upon this subject,* and therein called attention to the anomaly that the cylinder performance of the engine No. 444 was inferior to that of No. 383, and but little better than that of engine No. 357, the latter being the link-motion and D-valve engine. The average consumption of steam by the diagrams was as follows:

Engine No. 383	22.34 lbs.
" " 444	25.67 "
" " 357	26.73 "

The only plausible explanation of the difference that could be given was, that it was due to the leaking of the steel valves of No. 444, which were known to be wearing badly. In June, 1888, cast-iron valves were placed in the engine, and in the August following the writer took a number of indicator diagrams, copies of some of which are herewith presented (Figs. 154 to 160), with the object of seeing if any change in steam consumption had taken place. The following is the average result:

Engine No. 444, in August, 1888 . . .	21.95 lbs.,

or slightly better than the results from No. 383. The horse powers given are the totals for both cylinders.

The claim which the writer made, that the initial pressure of the steam in the cylinder of the Strong engine is only some 3 lbs. below the boiler pressure, was consistently verified, as the diagrams show.

Since preparing that paper the writer has experimented upon a

* Trans. A. S. M. E. Vol. IX, p. 556: ch. CCCIV.

more recent Strong locomotive in competition with a link-motion engine, and has been pleased to see that his claims concerning the capacity of the Strong cylinder to perform work was fully borne out in the most practical manner. The runs were over a division of one of our leading trunk lines from New York westward, the distance being 140 miles, and the actual schedule time westward being 3 hours 27 minutes, and eastward 3 hours 46 minutes, after deducting time for stops. This gives the average speed westward 40.6 miles per hour, and eastward 37.14 for times in motion.

The two engines had cylinders and driving wheels identically the same, and the average boiler steam pressures were nearly alike. The usual point of cut-off for the Strong engine, when hauling a heavy train, was 6 inches, and for a light train 4 inches, while the points for the link-motion engine were, for similar conditions, respectively 11½ inches and 8½ inches, and in nearly every case the Strong engine made up the most time, and drew the heaviest trains.

The points of cut-off were accurately determined, and the trains consisted of from six to twelve cars. The link-motion engine is one of the finest modern engines to be found in the country, and was in first-class order. The valves of both engines were proved to be tight.

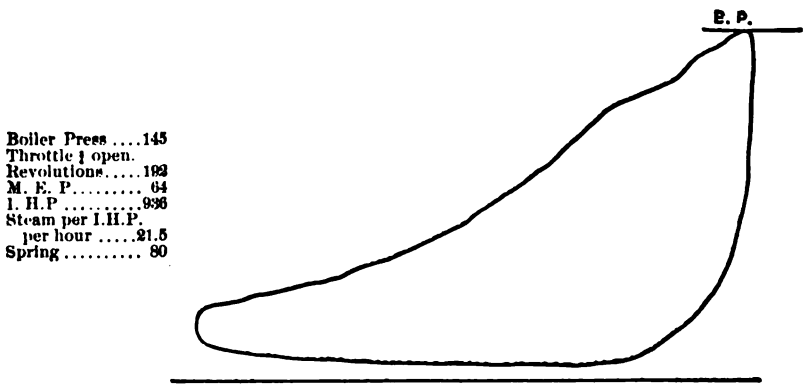

FIG. 154.

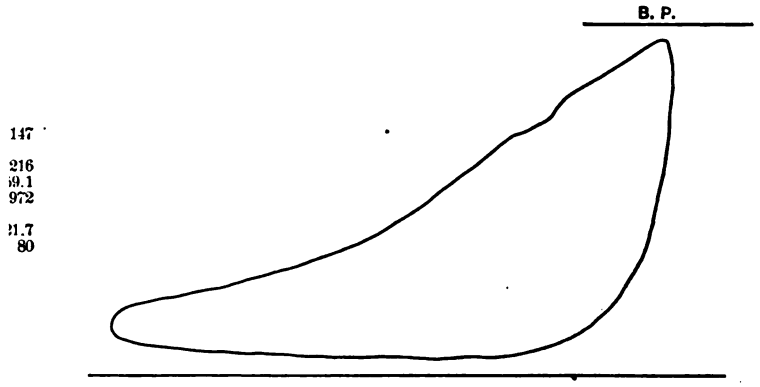

FIG. 155.

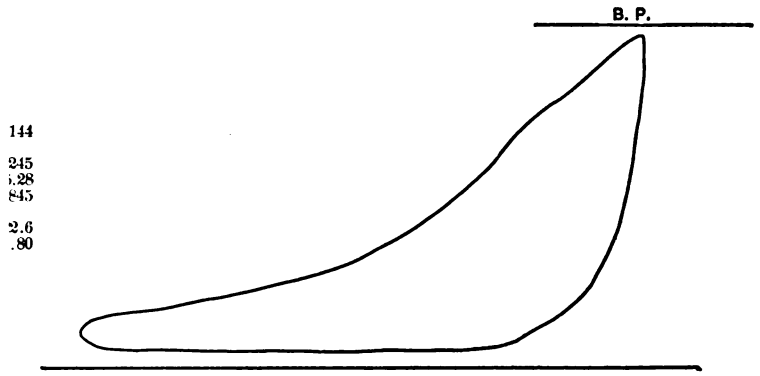

FIG. 156.

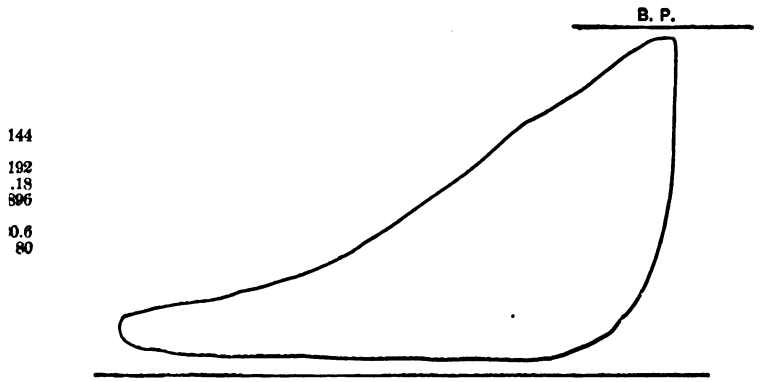

FIG. 157.

Boiler Press 145
Throttle ¾ open.
Revolutions.....252
M. E. P 48.77
I. H. P... 936
Steam per I.H.P.
per hour 23.4
Spring 80

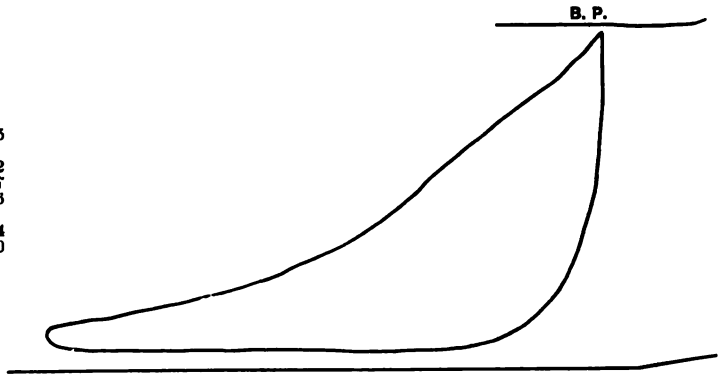

FIG. 158.

Boiler Press 144
Throttle ¾ open.
Revolutions.....252
M. E. P 44.69
I. H. P.....858
Steam per I.H.P.
per hour 21.74
Spring 80

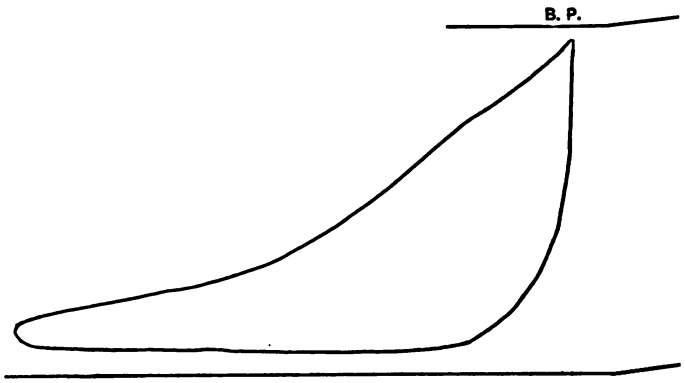

FIG. 159.

Boiler Press.....140
Throttle ¾ open.
Revolutions.....216
M. E. P 52.72
I. H. P.....868
Steam per I.H.P.
per hour 22.1
Spring 80

FIG. 160.

DISCUSSION.

Mr. W. W. Sprague.—I have some memoranda on the distribution of steam from a locomotive built by the C., R. I. & P. Ry. Co.: cylinders eighteen inches in diameter, twenty-four-inch stroke. This locomotive is in passenger service, and I find the results there shown in the matter of economy, as figured from the indicator diagrams, are superior, and the distribution of steam compares very favorably with the Strong locomotive. I find the points of cut-off not given by Mr. Dean, but, judging from the appearance of the cards, and some which I here present, a very fair comparison can be made.

Fig. 158, diagram from the Strong locomotive: I.H.P., 936; boiler pressure, 145 lbs.; M.E.P., 48.7 revolutions per minute; water consumption per I.H.P. per hour, 23.7 lbs. Diagram No. 743, from C., R. I. & P. locomotive: I.H.P., 782; boiler pressure, 142 lbs.; M.E.P., 50.7 lbs.; revolutions per minute, 250; water consumption per I.H.P. per hour, 20.7 lbs.,—a difference in favor of the C., R. I. & P. locomotive of three pounds of water per I.H.P. per hour; and while the I.H.P., as shown by the Strong locomotive, is greatest, owing to the cylinders being much larger, the I.H.P of the C., R. I. & P. locomotive compares favorably with it.

I think in the original paper of Mr. Dean, where the comparison is made of the Strong locomotive with a locomotive of the Lehigh Valley Road, the proportions of the valves were very bad, which gave a poor distribution of steam, and which, if taken as a standard of excellence in locomotive practice, may have led Mr. Dean to believe there are no locomotives which can compare with the Strong.

The diagrams from the Strong locomotive have always been shown as throttled; in the ones I present, the throttle was wide open, but the opening in the same is evidently too small, as the diagrams show.

The speed of locomotive, as recorded, is accurate and can be relied upon as correct.

Prof. Denton.—I would like to ask Mr. Sprague if I understand that he runs with the throttle wide open, and regulates with the lever?

Mr. Sprague.—Yes: that is what I advise—wide-open throttle; regulate the speed by reverse lever.

Prof. Denton.—Have you been able to show a definite saving?

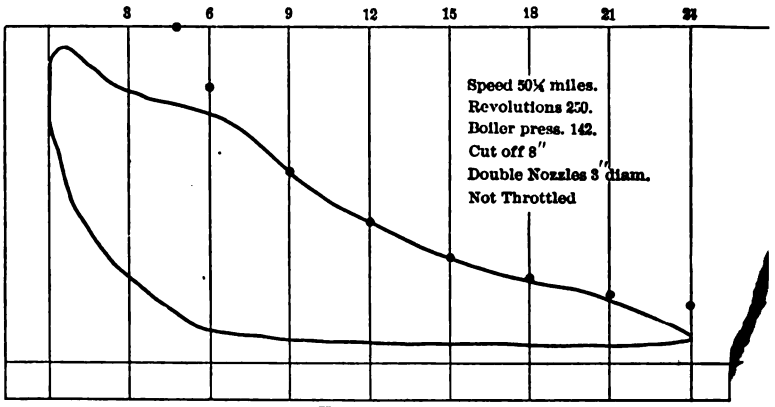

FIG. 154 A.

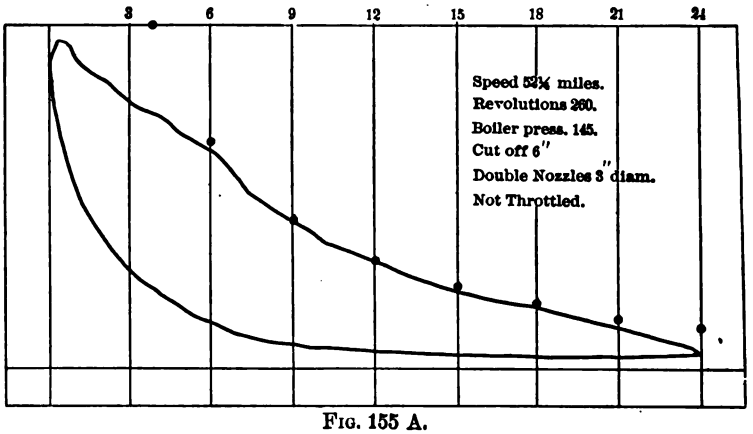

FIG. 155 A.

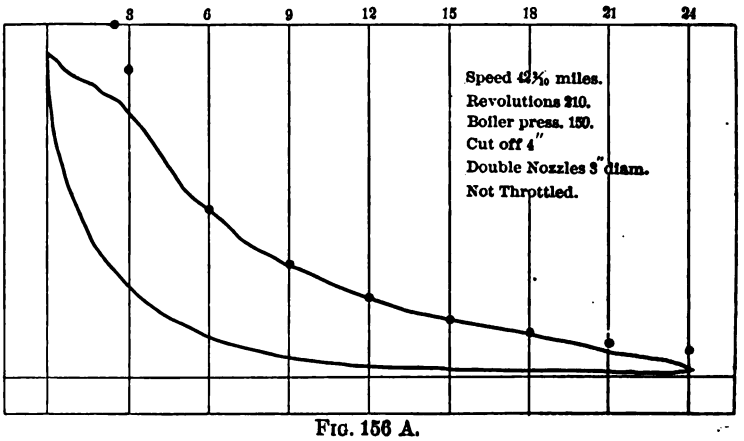

FIG. 156 A.

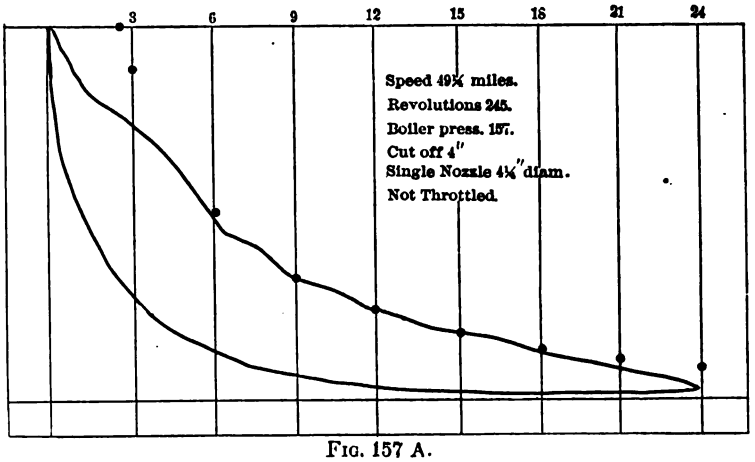

FIG. 157 A.

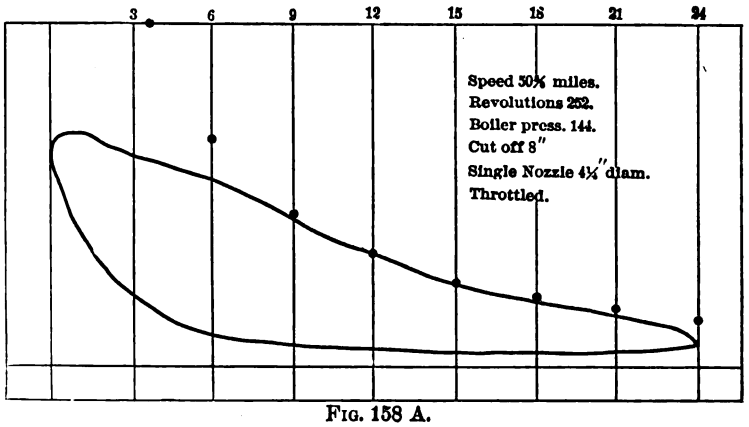

FIG. 158 A.

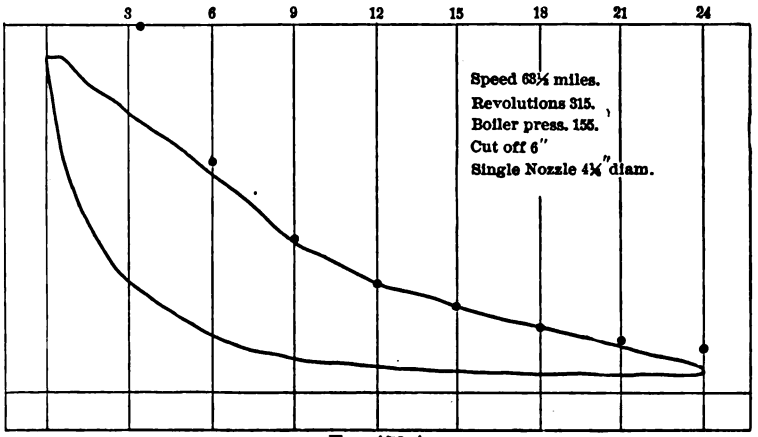

FIG. 159 A.

Mr. Sprague.—I have every reason to believe so. I have here two indicator diagrams, under very near the same conditions as to speed and power—one eight-inch cut-off, throttled; the other four-inch cut-off, wide-open throttle: the throttle diagram consumes 23.3 pounds of water, and the other 18 pounds per I.H.P. per hour. This is figured from the diagrams, and is not the actual consumption. But I have found the actual consumption of fuel of locomotives of the same class, and in the same service, and covering a long period of time, where the engineers run with wide-open throttle and regulated the speed by the reverse lever, shows a marked saving in fuel over engineers who regulate the speed by throttling.

Mr. F. H. Ball.—I would like to ask Mr. Sprague if he does not find that they are very much harder on the valves, valve seats, and on the valve gear links, etc.?

Mr. Sprague.—No, we do not: we use balance valves; sometimes we have a little trouble, caused by the breaking of a spring, but not very often; the valves we use are similar to the Richardson. The diagrams here shown were taken from a locomotive with a valve of the Allen-Richardson type. We have many locomotives which have run sixteen to eighteen months without taking up the steam chest, and the valves and seats in good order; with the old, unbalanced D-valve it might be a difficult matter to use high-boiler pressure, short cut-offs and wide-open throttle.

Showing Results from Double and Single Exhaust Nozzles.

No. of Diagram.	No. of Engine.	Total Mean Pressure.	Mean Back Pressure (including Compression).	Per cent. of Back Pressure to Total Pressure.	Mean Effective Pressure.	Total Horse Power.	Horse Power of Back Pressure.	Net Horse Power.	Smoke-box Vacuum (in ounces).	Steam Used per Horse Power per Hour (in lbs.).
743	476	67.63	16.91	25	50.72	521.50	130.40	391.10	2.46	20.70
737	476	56.84	17.62	31	39.22	455.80	141.30	314.50	1.90	19.30
733	476	48.34	15.48	32	32.86	313.00	100.00	213.00	1.01	18.63
Showing Results of Throttling:										
755	476	52.14	17.38	33⅓	34.76	394.00	131.30	262.70	.....	18.05
695	476	50.50	13.62	27	36.88	392.50	105.90	286.60	.....	23.37
High Speed Diagram from Allen Valve:										
780	476	59.58	21.88	36 1/16	37.70	578.90	212.60	366.30	.....	21.46

Engine 476: Eight-wheel passenger engine—cylinders, 18 × 24; steam ports, 15 × 1¼"; exhaust port, 15 × 2½"; throw of eccentrics, 5¼; lead, 1/16" in the 17"

ımeter of drivers, $67\frac{3}{4}''$; area of throttle valve, $14\frac{1}{4}$ sq. in.; Allen valve, , 1″; inside clearance, $\frac{1}{32}$.

lines at end of diagrams show volume of clearance. Speed taken by er attached by belt to back axle.

355, same as 476, with following exceptions: Lead, $\frac{1}{16}''$ in the 20″ cut- :er of drivers, $57\frac{3}{8}''$; area of throttle valve, $28\frac{1}{4}$ sq. in.

Synopsis.

ngle-exhaust nozzle shows a better smoke-box vacuum double nozzle, but it also shows more back pressure, ow- :am passing over into the other cylinder.

onomy of working engine with short cut-off and wide- ottle is clearly illustrated, showing a saving of twenty- cent. for the short cut-off.

ficiency of the Allen valve is very apparent, it showing a power of twenty-eight per cent., in 6″ cut-off, over the ve, with a slight gain in economy. In this comparison ı valve is at a disadvantage, as engine 476 had less lead :y small-throttle valve.

CCCXLVII.

BITS OF ENGINE-ROOM EXPERIENCE.

BY LEWIS F. LYNE, NEW YORK CITY.
(Member of the Society.)

About the middle of the year 1888 I had charge of a Buckeye engine, in which a mysterious pounding noise one day appeared. It proved upon examination to be in the cylinder, and was caused by the packing-rings striking against a shoulder which had been

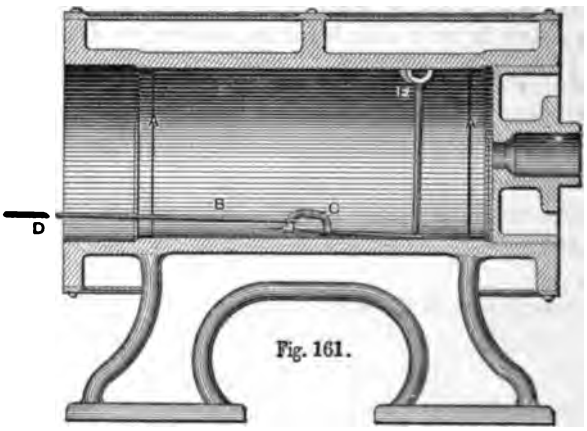

Fig. 161.

worn at each end of the bore. How this occurred will be quite clear from an inspection of Fig. 161, which represents a longitudinal section of the cylinder of an 18″ × 36″ Buckeye engine. The shoulder is represented at *AA*, and it was formed in this wise: The piston packing was of the type shown in Fig. 162, where *A* represents a cross-section of the cylinder and *B* the piston. The two piston packing-rings were cut to break joints, and occupied a groove $\frac{7}{8}$″ wide in the center of the piston, as shown at *C*. It will be seen at once that these rings do not travel the entire length of the bore, but stop in this case $1\frac{1}{8}$″ short at each end, as shown by the dotted line *D*.

From the center, *E*, upward, this shoulder was worn quite sharp, while from *E* downward the shoulder was less marked, for the reason that the piston wore the bottom of the cylinder, as shown by the dotted line extending from *E* downward. An exaggerated case is shown by the dotted lines in the cross-section of cylinder, *A*. The Buckeye company, I am glad to learn, have abandoned this style of packing, and now use spring rings similar to those that I put in place of the kind removed. These rings were $\frac{3}{4}''$ square, and traveled over each end of the bore $\frac{3}{16}''$, as shown by the dotted lines *FF*. To put this packing in, the shoulder shown at *AA* had to be removed. It was a comparatively easy matter to file off the shoulder at the back end when the head was removed; but to file off a belt of cast iron $1\frac{1}{2}''$ wide, $\frac{3}{64}''$ thick, and 56.70″ long, in the crank end of an 18″ × 36″ cylinder, is not such an easy job. This engine had to run every night, starting at 4.30 P.M. and stopping at 6.30 A.M.; so it will be understood that the cylinder did not have time to cool sufficiently to make the interior a very desirable place to work in. The way we did it was this: A rod, *B*, of $\frac{3}{8}''$ round iron was provided with an eye turned on one end, to slip over the offset file-handle *C*., generally used by machinists for filing flat surfaces. This rod was left sufficiently long to reach outside the cylinder as shown, so that a workman standing close to the end of the cylinder, at *D*., could work the 14″ bastard file which was used on this occasion.

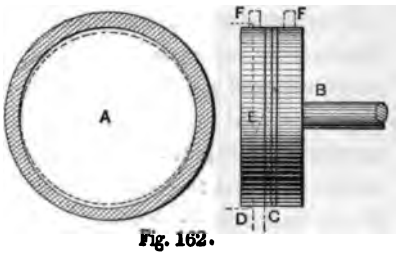

Fig. 162.

I used what is known as a safe-edge file, on account of its having a broad end, thus giving more surface for cutting. I had an old rubber spring which was cut in two; then, with a tenpenny nail, one half of this spring was fastened to the end of a broomstick, as shown at *E*. The broomstick was sawed of a proper length, so that, when placed across the cylinder inside, a sufficient pressure could be thrown upon the end of the file. We were now ready for business; so a sperm candle was placed in a $\frac{7}{8}''$ hexagonal nut, and after being lighted was placed close to the head of the cylinder. A rubber hose was attached to a common bellows, and supplied fresh air through the stuffing-box. In just two and a half hours from the time of commencement, the shoulder at this end of the cylinder was removed. Any one who has ever undertaken to work a file

inside of an 18″ cylinder can readily appreciate the pleasure experienced in lying inside that cylinder and guiding the file while the workman outside furnished the motive power. To sure, the temperature inside was high; but we all get used to that working around steam-engines and boilers. The engine was rea to start on time, so no delays occurred in consequence of the wo we had to do. Most people would have bored out that cylinde but it did not need it, as the bore was in fine condition but for th shoulders at the ends.

While I am on this subject, I cannot refrain from condemning all forms of piston packings which do not wipe over the entire end of the bore, to avoid the slightest possibility of wearing a shoulder.

I remember an instance that happened on a tugboat in 1882, where a 20″ cylinder was split the entire length because the piston-rings wedged against a shoulder worn at the end of the bore. The engineer had been taking up the main-rod brasses the day before, and in so doing the rod was lengthened so that the packing-rings, which were of the old-fashioned spring type, being stuck fast, split the cylinder as described. If the rings travel over the end into the counterbore there is no possibility of such an accident. I never could ascertain why any engineer could design cylinders so that shoulders could be worn at the ends. I mean this to apply to pumps of all descriptions, and air compressors, as well as to steam-engines; for I have met and remedied this same difficulty time and again in overhauling various kinds of machinery. I remember on one occasion, where the cross-head gibs on a certain steam-engine were adjusted when the piston stood at half stroke, there was a shoulder worn on each end of the guides, so that, when the engine started, the cross-head was split open when it reached the shoulders. So it will be seen that this principle applies not only to cylinders, but to guides as well. In short, where there is reciprocating motion, great care should be taken to have the gibs or slides wipe over, to prevent the formation of shoulders. To be sure, such instances are becoming more rare, on account of the better diffusion of practical knowledge through our technical schools; but there are hundreds of steam-engines and pumps where these shoulders should be taken off and recesses cut in their places. I visited a machine-shop the other day, and saw a newly designed automatic cut-off steam-engine in which the cylinder had no counterbore at all, the bore being straight through from end to end. I asked the designer why it was, and he gave an evasive answer,

treating the matter as of little consequence. While I am so near the stuffing-box, let me say that since there are people in this world who will still persist in using fibrous packing—why cannot we have a good, respectable-sized stuffing-box to put the packing in? There are many steam-engines in the market to-day which are well designed otherwise, and represent the crystallized practice of many years, and yet are almost destitute of stuffing-boxes. Some people argue that, with large stuffing-boxes, ignorant engineers will fill them with packing and screw them too tight, thereby losing work through unnecessary friction. Grant it; but if people will persist in hiring ignorant engineers to take care of their engines, should they not bear the consequences? and is this a sufficient reason why the intelligent engineer should be deprived of a properly proportioned stuffing-box? Engines should be designed so that intelligent men will not be compelled to put less than one-half the packing required into a stuffing-box, then screw it up until the piston-rod, after a week's run, more resembles a fluted column than anything else. This is no exaggeration; for it was only the other day that I saw a new engine in which the valve-stem had to be packed every week, when it ought to run at least two months.

A common mistake is made in turning valve-stems of a uniform diameter throughout, so that, after they have been in use a year or so, one has to either throw away the stem and get a new one, or resort to some such wrinkle as I am about to describe. The valve-stem, as it wears, assumes the form shown in Fig. 163, so that it is entirely out of the question to keep it tight except at each end of the stroke, where it jams so tightly that one is in danger of tearing some of the valve motion apart. I once knew a locomotive rock-arm to be sprung $\frac{5}{16}''$ out of its original shape by screwing the packing too tight on a badly worn valve-stem.

A valve-stem of the kind first described became badly worn upon an engine under my direction, and its shape very much resembled Fig. 163; so I put it in a lathe and trued it up, letting the

cut run about 2″ each end beyond the point where the stem would travel when in use. The job was to get a gland and junk-ring on that stem so that they would fit. This is how it was done: A brass bushing was sawed through longitudinally, and the joint filed to a fit. I then with soft solder sweat them together, using the slightest quantity of solder. I then bored this bushing to fit the stem, and turned it to easily fit the original junk-ring, which had been previously bored out and recessed, as shown in Fig. 164.

When finished, the bushing was warmed to melt the solder when it fell apart. I then slipped the ring *H* over the valve-stem *I*, and placed the two parts of the bushing *G* in place. It will of course

Fig. 164.

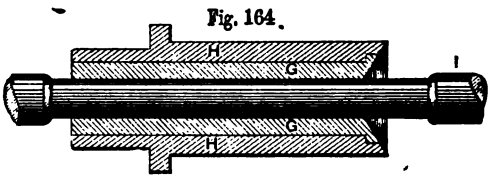

Fig. 163.

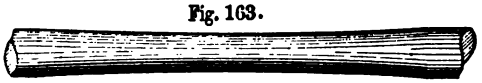

be understood that when in the stuffing-box the packing will prevent this bushing from moving, so that for all practical purposes it is as good as if it were all solid. The ring *J* which fits in the bottom of the stuffing-box is made in the same manner as that of *G*, except when put on the stem a drop of solder is used to join it; but when once inside the stuffing-box it does not matter whether it is in two pieces or one. Some builders of steam-engines excuse themselves from not making that part of the valve-stem that works through the stuffing-box $\frac{1}{8}$″ at least larger than the rest, on the ground that the area presented for the steam to act upon will be too great and will be attended by an excessive wear of the valve motion. All I have to say in this connection is that, within the practical limits here intended, the above argument has no value, for unless a piston valve or other means of balancing are used, it would take a pretty large-sized valve-stem to offer a sufficient surface for the steam to act upon in overcoming the friction of a slide valve upon its seat. Sufficient stock should be allowed, and so distributed that valve-stems may be trued up several times before they are thrown away.

The practice of making the threads on the ends of piston-rods of equal diameter with the rest of the rod ought to be condemned for several reasons. The principal one is that the rod cannot be trued up and used without resorting to a spilt gland bushing; and when metallic packing is used it is necessary to remove that packing whenever the piston-rod is taken out of the cylinder. The reason is that the threads on the end of the piston-rod would tear it all to pieces in drawing it back through the stuffing-box. If the thread were of a smaller diameter than the body of the rod, as it should always be, then there would be no necessity of disturbing the packing, and the rod could be trued and replaced, requiring only a plain bushing for gland and for junk-ring.

The above engine, when first set up, rested on a bed of sulphur, against my remonstrance; but we were told that there were hundreds of steam-engines set in the same way. The thickness of sulphur between the feet on the cylinder and the stone capping on the foundation was $\frac{7}{8}''$. After two years of service the sulphur began to disintegrate and work out. The engine had to run every night, so whatever we concluded to do in the line of repairs had to be done between the hours of 7 A. M. and 4 P. M. For information I asked about a dozen engineers of my acquaintance as to what they would do under the circumstances. The answers I received have induced me to put this in print, for I would have been very grateful had any one told me off-hand of the method that I employed to secure this engine permanently on the foundation. One friend says, "Make a rust joint," forgetting that it takes three or four days for a rust joint to harden sufficiently to be sure that it would not disintegrate and come out. Another says, "Put in cement," knowing full well that cement requires a week or ten days to become hard. Still another says, "Wedge up the cylinder and run in cement, and let the engine rest on the wedges until the cement hardens." He knew that wedges are the worst things that could possibly be used to support a

piece of machinery that is constantly vibrating, for they do work loose. Finally one friend says, "Put in more sulphur," arguing that it would last as long as the original, which was certainly good logic; but this did not suit me, for I wanted to make a permanent job of it.

I went home and meditated, and the next morning I went to the machine-shop and had four pieces of flat iron 4″ × ½″ cut off. These I reduced in thickness so as to just fill the space between the top of the cap-stones and the cylinder feet. I dug out the sulphur by the side of each anchor bolt, of which there were four, two in each foot; I slacked the nuts of the foundation bolts, then put in my liners, one for each bolt, and screwed them fast.

The sulphur was then removed from one foot at a time, and the space thoroughly scraped out. We then took two strips of lath and wrapped sufficient paper around each of them to fill the space between the stone and foot, thus dividing the space into three equal parts. This was done because it would take more metal to fill the space than could have been conveniently handled. We placed strips of lath edgewise all around the foot, and backed them with fire-clay. An opening was left at each of the four corners—two for risers and two diagonal corners for pouring metal, leaving a head of about two inches to better ensure a solid casting. Some powdered resin was thrown into the gates to absorb the moisture and prevent the casting from blowing. Having previously melted in an iron pot a mixture composed of nine parts of lead, two of antimony, and one of bismuth (commonly known as expansion metal), we poured from two ladles and in about ten minutes had the satisfaction of finding that our cylinder was as securely held as if it had been originally bedded on the solid stone. We poured the outer spaces of each foot first, then removed the two strips of lath and poured the middle space, the two outside castings forming the dam preventing the metal from running out at the sides. No one who has seen it doubts that this cylinder is *fixed forever*. Some persons will say that they have been setting engines on sulphur for the past decade and none of them came loose. Grant it; *but ours came loose!* and let me urge this assertion—that an engineer does not want to have an engine-bed work loose on the foundation but once in a lifetime. Let an engine-bed be fitted as closely to the stone as possible; then, after leveling, put a thin grout of good cement into the cracks, if any are left, to equalize the strains upon the bed-plate when the nuts are tightened on the foundation bolts. Where the

bottom of casting is rough, or the top of foundation has not been fitted to the engine-bed, the engine should be leveled and supported upon liners (not wedges) and the nuts screwed up lightly. Then pack in well-mixed cement and slabs of roofing slate until all the cracks are filled. It takes about one week for this mixture to get hard; but it is cheap and durable, and while it is hardening the other work of cleaning and putting the engine together can go on without interruption. During the past twenty years I have set up a great deal of heavy machinery by bedding in this way, and after the cement had hardened I took careful measurements and found that the beds had not moved or sprung. I have yet to hear of my first piece of machinery set in the manner just described coming loose or giving any trouble whatsoever.

While I think of it, I wish to mention a curious circumstance that occurred in connection with our heater connections. The engine cylinder for some unknown reason began to cut, and the small steam ports in the cylinder of our steam pump became stopped up. Subsequent examination revealed the fact that a steam valve in the pipe connecting with the scum chamber of the heater for the purpose of blowing it out, was badly out of order, so that the scum and grit arose and backed up into the steam-pipe, and were carried thence to the pump and engine. I at once had the pipe separated, and it is connected only when we wish to blow out the heater. After this is done the pipe union is slacked up, so that if there were any leak it would appear at once. This involves the use of two globe valves instead of one. My experience in this direction led me to conclude that it is an exceedingly dangerous thing to connect the steam pipe leading to pumps and engines with heaters, because, if there should happen to be a leak at any time, the grit and dirt are almost certain to cut all the cylinders.

These few practical suggestions seem to prove that while we as engineers are unquestionably advancing in some directions, we are retrograding in others.

DISCUSSION.

Mr. Oberlin Smith.—Upon this paper I merely wish to take up one of the good points discussed, and say that we can, none of us, attach too much importance to the practice of designing all the reciprocating members of machines so that the termini of rubbing services will "wipe" past each other, as Mr. Lyne terms it, thus

preventing the abominable evil of "shouldering." This I learn[illegible] very early in my engineering experience, by being obliged to cr[illegible] inside of the box frame of a 120 H. P. horizontal engine to cl[illegible] and file away the lower side of the flat guides, for about 1 inch each end, because these guides were about 2 inches longer than t[illegible] stroke plus the length of the cross-head brasses. The upper si[illegible] was easy enough and was a good place to learn delicate chippin[illegible] The operation had to be repeated at intervals of a month or tw[illegible] and as the conglomerate of black grease, furnace ashes, and bra[illegible] dust usually lay about an inch deep in the confined space withi[illegible] the frame, and was of the consistency of rich molasses, the job wa[illegible] not a pleasant one. Of course, the trouble could all have bee[illegible] remedied by three inches of common-sense applied in shortenin[illegible] the guides, or lengthening the cross-head by that amount, thu[illegible] giving half an inch to wipe over at each end.

In the building of punching presses and other machinery havin[illegible] reciprocating slides, I always pay particular attention to this point The only case where it cannot be properly carried out is where a slide has an end *adjustment* greater than its *stroke*, although in practice the different positions to which it is adjusted at different times will usually average up the wear, so that there is no trouble.

I think the best plan in all such constructions is to come as near as possible to following out the principle, advocated more than once by Professor Sweet before this Society, of making both members of a sliding mechanism the same length. For instance, a nut should be as long as the threaded part of its screw, etc. This principle is difficult to follow in some cases, such as a lathe carriage upon its bed, where the traverse is very long compared with the limit of length necessary in the carriage, but it is well to keep the idea in mind wherever possible. In general, too little attention is paid to shouldering screws down to a diameter as small as the bottom of the thread in all parts not subjected to actual wear. Not only do members of a machine, which reciprocate upon or within one another without the ends "wiping" past, wear to a "shoulder," but they also wear out of parallel, as shown in Mr. Lyne's rod, Fig. 163.

Mr. W. J. Creelman.—The portion of Mr. Lyne's paper relative to bedding engines on sulphur is interesting to me, from the fact that his experience with that material is in direct opposition to my own. Our practice, generally, is to use sulphur for bedding engines, but in a thin body allowing not more than one-sixteenth

of an inch in the thinnest part. The sulphur will readily flow into this space if it has not been kept hot so long as to become thickened or waxy, and in fourteen years' experience I have never had a case where it worked loose.

I knew of one case, however, where the parties erecting the engine neglected to fill the anchor bolt holes with clay or cement, which resulted in the sulphur running into the holes and uniting the bolts so fast to the cap stone that they could not be budged. When the foundation settled, it naturally loosened at the bottom of cap stone, and no amount of tightening on the anchor bolts could help it. The remedy was to wedge up under the cap stone and pour in thin cement, which answered very well, as the engine had light work; but more heroic measures would probably have been necessary under more exacting conditions. In this instance, of course, the trouble should not be chargeable to the use of sulphur, but to the improper manner in which the work was done.

At the same time, I agree with Mr. Lyne that cement will make a good job, as I have frequently used it; and good cement, especially Portland, will give satisfactory results, as it becomes very hard. It requires, however, more space between the bed and cap stone than does the sulphur. In the case Mr. Lyne refers to, the fact that the sulphur was one-sixteenth of an inch thick seems to me to be one reason why it proved a failure.

Mr. C. S. Dutton.—In this connection, yesterday, some member asked for the result of experience in regard to lubrication of engines. It reminded me of an experience I had recently in an engine-room where an engine cylinder failed to lubricate, for what reason is not yet determined, but the simple fact was that the lubrication was imperfect. The valve was a balanced Allen valve. There was no difficulty with that, but the cylinder did not lubricate. I will not go any further into the conditions than to say that it was a 30 x 36 engine running about 135 revolutions. It was continuous work, running wood-pulp grinders from Monday morning to Saturday night. It was first tried by the users of the engine to put additional oil-cups at the indicator holes; but as the ports were on the side, nearly all the lubrication that went in that way was carried out, and what was finally done was to tap holes in the center of the cylinder at the bottom and the top and to attach an ordinary sight-feed lubricator and feed the oil into the center of the cylinder at the bottom, which obviated all difficulty; and there has been no further trouble with it.

Mr. A. K. Mansfield.—I would like to suggest, in regard to the method of making valve stems, that in these times it is customary with some builders to use cold-rolled steel for such purposes, and the custom also is, for some kinds of engines—perhaps the larger sizes—to avoid turning down the valve stem, but to get a new stem when the old one is worn.

Mr. J. H. Cooper.—I would simply suggest that it has been our custom to make that part larger, so that, if it wears unequally, you can turn it down and save all the other parts. We found also that they are better made of wrought iron than steel. Wrought iron will last a great deal longer than steel will for such purposes.

Mr. E. F. C. Davis.—I would like to say our experience is just the reverse of Mr. Cooper's. We find that steel is the best. You must take a piece of steel, and hammer it out yourself. We find that the cure for that sort of wear is to make the stuffing-boxes extremely long and deep, and it will partake somewhat of the qualities of a straight-line engine stuffing-box.

CCCXLVIII.

ON THE LONGITUDINAL RIVETED JOINTS OF STEAM-BOILER SHELLS.

BY JOHN H. COOPER, PHILADELPHIA, PA.

(Member of the Society.)

THE initial statement to the English Lloyd's rules for steam-boilers is embodied in the following words: "The strength of circular shells to be calculated from the strength of the longitudinal joints,"—which assures us that this part of the boiler should be properly proportioned.

To these rules a memorandum is added: "In any case where the strength of the longitudinal joint is satisfactorily shown by experiment to be greater than given by this formula (Lloyd's), the actual strength may be taken in the calculation."

Later on, Lloyd's rules (under the head of "Periodical Surveys," regarding the examination of boilers after they have been several years in service) say: "The safe working pressure is to be determined by their actual condition."

These statements lie in the line of practical efficiency, and point to the necessity of providing material in accordance with the requirement of the load to be carried.

Any one who takes the trouble to collect and compare data on this subject cannot fail to notice the great disparity of rules for determining the working pressure permissible for boilers.

The case is clear by simple reasoning on the data collated, that boilers are held together, it would seem, more by conformity to rule than by the materials of which they are made.

But of course the true course to pursue is to give to each member its proper allowance of section, in order that the components of the joint shall have an equal chance under strain according to its resisting power.

The diminished strength of the shell of a boiler by the longitudinal joint is well known, and it becomes good engineering so to proportion its parts as to obtain the greatest strength possible within the limits of practical economy.

When it became necessary to assure themselves confidently of the permanent safety of a structure composed of plates held together by rivets, engineers were not long in finding out that a certain allotment of rivet section to plate section at the joints was necessary, and that these sections were found to be nearly equal in the strongest joints.

The experiments of Fairbairn, conducted in the year 1838, proved that "the sectional area of the rivets in a joint was nearly equal to the sectional area of the plate through the rivet-holes."

Subsequent experiments by Clark on riveted plates for the Britannia and Conway Tubular Bridge fully corroborate the above statement. His conclusion was: "The collective area of the rivets is equal to the sectional area of the plate through the rivet-holes."

This relation of the components of the joint in course of time became embodied in the English Board of Trade rules and in Lloyd's rules now in force, regulating the construction of steam-boilers. It also forms the basis of the Philadelphia steam-boiler inspection ordinance, first formulated in 1882.

Referring now to those rules only which relate to the proportions of the longitudinal joints of the cylindrical shells of boilers, we are prepared to say they may be most conveniently presented by the following notation and formulæ:

NOTATION.

A = Percentage of punched plate to the solid plate.
B = Percentage of driven rivet section to the solid plate.
C = The pressure in lbs. per square inch which the boiler is allowed to carry.
a = Area of driven rivet, or rivet-hole.
d = Diameter of rivet-hole.
n = Number of rows of rivets.
p = Pitch of rivets.
t = Thickness of plates.
R = Radius of boiler shell.
S = Ultimate shearing strength of rivets in lbs. per square inch of section.
T = Ultimate tensile strength of plates in lbs. per square inch of section.
f = Factor of safety.

E = Limit of elasticity in the plates in lbs. per square inch of section.

$\%$ = Percentage of joint strength.

The least of A or B should be inserted in the formula C.

All dimensions in inches.

The notation and the formulæ mutually explain each other.

$$A = \frac{p - d}{p} \quad . \quad . \quad . \quad . \quad . \quad (1),$$

$$B = \frac{a\,n}{p\,t} \quad . \quad . \quad . \quad . \quad . \quad . \quad . \quad . \quad (2),$$

$$C = \frac{t\,(A \text{ or } B)\,T}{R\,5} \quad . \quad . \quad . \quad . \quad . \quad (3).$$

These formulæ are intended exclusively for the guidance of the inspector in ascertaining the exact strength of the joints in the boilers which come under his care, and which enable him to determine the working pressure of steam allowable under the rules. They do not, however, enable the boiler-maker to determine directly that proportion of pitch which he should use with any given plate thickness and rivet diameter, in order to secure the strongest joint and which will also pass the highest inspection.

To secure these results the following simple formulæ were devised by the writer (early in 1882), in which the notation given above is similarly employed, and which may be thus expressed.

For single-riveted joints, when iron plates are secured by iron rivets and when the plate thickness and rivet diameter are given, it is desired to find a pitch that will secure equality of plate and rivet section—the formulæ will be:

$$p = \frac{a}{t} + d \quad . \quad . \quad . \quad . \quad . \quad . \quad . \quad (4).$$

This plainly means that the pitch is equal to the area of the rivet-hole, divided by the thickness of the plate, and to the result of which the diameter of the rivet hole must be added.

For multiple riveted joints, when iron plates are secured by iron rivets, the same formula is used with the addition only of n, representing the number of rows of rivets, thus:

$$p = \frac{n\,a}{t} + d \quad . \quad . \quad . \quad . \quad . \quad . \quad . \quad (5).$$

The different resisting power of equal areas of section, as many times found by tests of the shearing stress of the rivets and the tensile stress of the plates, is not taken into account in the make-up of these rules. They are treated in all cases as equals under the strains of continued use. That is to say—

The Philadelphia Boiler Ordinance and the English rules alike impliedly declare: The shearing strength of the rivets is just equal to the tensional strength of the plates per square inch of area in boilers made of iron plates and iron rivets.

If any one takes exception to this treatment of the two strains, the formulæ permit him to introduce his own figures of difference into their make-up, by which he can get a result in accordance with his own belief; but of the mathematical base, embodied in the formulæ, we are sure.

For single and multiple riveted joints when steel plates are secured by iron or steel rivets, the relative resistance of the plates to tension and of the rivets to shear must be inserted in the formula.

First, let us assume, as the rules for inspection have done and do in all cases, that, area for area subjected to stress and acting together, iron plates and iron rivets are equal in resistance.

The "Best" Staffordshire iron boiler plates will stand 48,000 lbs. *T.* per square inch of section; but the Board of Trade and Lloyd's limit all best iron plates and rivets alike to 47,000 lbs.

The Philadelphia Ordinance will pass iron plates which have shown on test a *T.* of 50,000 lbs. per square inch, but will allow no more whatever the plates may show, and will give full credit to a joint in which the driven rivets have equal section to the punched plates.

And yet we well know it to be a matter of fact that the shearing strength is less than the tensile strength of the same material.

Mr. William H. Shock's experiments on American iron gave as a mean for single shear 41,033 lbs. per square inch, and 78,030 lbs. for double shear, these experiments being made upon iron bolts in a shearing device which did not include the uncertain element of friction by the rough surfaces of the plates when bound closely by the rivets of a riveted joint made in the usual way.

When iron rivets are used with steel plates, they are accepted, under the rules, for just what they are worth under shear, and no more. The English rules say: "Iron rivets in steel boilers should have a section of $\frac{13}{8}$ of the plate section." Steel rivets must be calculated from their actual strength to resist shearing; and for these

the fraction $\frac{28}{23}$ will express the larger area they must have to the plates with which they are used to make joints, simply because steel plates show an ultimate T. of 28 tons, and steel rivets an ultimate S. of 23 tons per square inch of section.

The old rules published by Fairbairn, and used by him and by many boiler-makers since, are obsolete now, in the light of the later method of proportioning joints and the laws which sanction their use, although he furnished the first material for the base upon which this law has been built.

From an extended list of all iron single joints, proportioned on the principle of equality of sectional areas, the percentage of joint strength to the solid plate will reach to .64 and in double joints to .78, and be practically tight under pressures up to say 100 lbs. of steam per square inch—a material increase over the oft-quoted figures of .56 and .70, originated and recommended by Fairbairn.

If we accept the inspection laws referred to, assuming even results of the two strains, then rules 4 and 5 will find the proper pitches for boiler joints made of iron plates and iron rivets; but in composite boiler shells the introduction of symbols representing the actual powers of resistance of the components will be necessary: we will then have for double or multiple joints:

$$p = \frac{n\,a\,S}{t\,T} + d \quad . \quad . \quad . \quad . \quad . \quad . \quad (6).$$

which can be applied also to an all-iron joint or to joints made of other materials than the usual iron and steel.

In formula 6 may be inserted the elastic limit E of the plates instead of the ultimate tensile strength, and with this should also be inserted the stress at which the shearing of the rivet begins, together with a factor of safety corresponding to the requirement of these important factors.

If we desire to find the pitch of the rivets, when the rivet diameter and a certain percentage of joint strength are given, we may use the following formula:

$$p = \frac{d \times \%}{(100 - \%)} + d \quad . \quad . \quad . \quad . \quad . \quad (7.$$

This does not include the thickness of the plates; it relates only to the proportion existing between the distance from center to center of the rivet holes and the space between the holes.

Other convenient formulæ are readily obtained from A, B, and C, by transposition; as, for instance, it is desired to know the S.

to which the rivets are exposed in any particular case after all the elements have been obtained—the formula will take this shape:

$$SS = \frac{C \times R \times f}{t \times B}, \quad . \quad . \quad . \quad . \quad . \quad (8)$$

and will give the lbs. per square inch of cross-section to which the rivets are subjected in the seam by the steam pressure C, which has been obtained by the Ordinance formula.

The *rivet-hole* determines the size and measure of the rivet after it is driven, because it is then filled by it; and in making calculations with the aid of these formulæ, the trade sizes of the rivets *must not* be taken.

In punching holes for rivets in boiler plates, it is the usual practice to use punches $\frac{1}{16}$ of an inch greater in diameter than the trade diameter of the rivets, and it is also usual to make the dies which are used with the punches $\frac{1}{32}$ of an inch larger in diameter than the punches to be used with them. The result of this method is to make conical holes in the plates, corresponding to the sizes of punch and die.

If the punched holes are net to the dimensions of the punch and die here given, and if the material of the plate immediately around the hole has not suffered in the act of punching, then the proper size of holes to be used in the formula would be the *mean* diameter of the conical holes so made, instead of $\frac{1}{16}''$ larger than the punch, as they are usually assumed to be.

It is well known, however, that the material of the plates bordering the holes is weakened by the detrusion of the punch; to what distance this reaches from the surface of visible separation of the metal may not be definitely known, and must necessarily be different with different materials and punches—but it is certain to be a small measurable distance into the plate around the hole.

If we take the diameter of the punched holes to be equal to that of the die, we will not be far from the actual state of the case, especially as some of this disturbed metal is removed by the reamer or crushed by the drift-pin.

We are safe in this assumption in so far as the ultimate strength of the joint is concerned, because, as usually happens in rupture, the plates give way, while the rivets rarely fail; and again, the plates suffer loss of substance by wear and waste, while the rivets are preserved against deterioration, and therefore the initial strength of the plates ought to be favored.

In view of these facts, the suggestion is here made that when we wish to determine pitches from given plates and rivets, that we use the *greater diameter* of the punched hole, whatever that may be, for the quantity expressed by a in all of these formulæ, and that we assume the rivet diameter to be that of the lesser diameter, or reamed-out diameter of the rivet-hole.

The result of this apportionment of the material will be effectively to strengthen the plates, which all experience has proven to be necessary: so that while this decision appears to be against reason and the isolated facts of experiment—the resistance to shearing always proving less than that to direct tension in the same material—it must be constantly borne in mind that the strain on the plates and rivets are not *direct* in the ordinary lap-joint as they are used in a boiler, the plates being subjected to some transverse strain while under tension, and the rivets to some tensile strain while under shear.

Strictly speaking, the plate loses what is punched out of it, together with the metal destroyed around the punched hole, and the rivet gains by whatever increased diameter it gets in the process of riveting. They should be estimated upon what they actually are when the joint is made up.

DISCUSSION.

Mr. F. A. Scheffler.—I have been very much interested in the paper which has just been presented to us. I fully concur with Mr. Cooper in his remarks, and also with Mr. Parker. It seems to me, however, that a boiler-manufacturer cannot tell into whose hands the boiler he makes is to be placed, and how it will be used after it is set up, and that the only thing that he can do is to be on the safe side in building a boiler and feel sure that he has arranged a proper proportion between the strength of the rivets of the joints and the strength of the shell, so that they will be practically the same thing. It is almost impossible, of course, to get them exactly the same; I think that the nearest that we can come on a riveted joint is 75 to 80 per cent. of the total strength of the shell, and I would also add that the estimates which we have had made in a large number of cases of boiler shells that have been stamped a certain tensile strength always run up above the stamp. I never knew of a case that had the tensile strength down below the limit of the stamp. For instance, with plate which is stamped 60,000 pounds, which is the customary tensile strength for the boilers which are used

on land, we always find that the actual tensile strength is from 60,000 to 68,000 pounds, sometimes running up to 70,000. Of course when it gets to 70,000 pounds, unless the reduction of area is up to its proper limit of 50 per cent., it is not a good plate to use. I would also add that in these cases where the tensile strength has been increased beyond the stamp, that the reduction of area has also increased. We have had a large number of cases where the plates have run up to 68,000 pounds tensile strength and the reduction of area has been as high as 58 per cent. This is ordinary steel which is being made nowadays by buying of the manufacturers of first-class steel plate.

Prof. F. R. Hutton.—The point which Mr. Scheffler raises is one of considerable interest. I had in my experience lately a case where some copper was to have a tensile strength of 34,000 pounds under the specifications—34,500 I think was the figure—and an elongation of 25 per cent., for locomotive fire-boxes. A thoroughly reliable firm in New York asked me to certify to the sample of copper which they sent, as possessing those qualities, in order to secure the contract they were after. I found that it was impossible to get a tensile strength in excess of 33,000, but that I always got a much higher elongation than called for by the requirements of the specification—less tensile strength and greater elongation. The machine with which the test was made was one of Fairbanks' screw machines, and it was not possible to make that test very fast. It occurred to me that this might be the very difficulty by which these gentlemen were hampered in competing for the contract—the specifications were based on the results of tests made by a hydraulic machine and made very rapidly. I suggested that they take this particular brand of Calumet and Hecla copper and try it in a hydraulic machine. They did so, and found they had no difficulty in getting the results they were after.

I speak of this because it is in confirmation of a matter which is in the line of the Society's work, and exactly brings out the point of this difference between one set of persons' investigations and those of others, the difference being the result of the methods of test.

Mr. H. H. Suplee.—In this connection I should like to call attention to Kirkaldy's rule for tests, which may be familiar to many of the members, viz., the measurement of the tensile strength referred to the cross-section after fracture, thus taking the elongation into account, and making the results in every case comparable.

Mr. C. H. Parker.—There is one other point I would like to speak

of which is called to my mind by what Mr. Scheffler says. The determination of the strains brought to bear on the seams of a boiler in actual practice can almost be said to be an impossibility, and those strains are the most troublesome to deal with. There is no knowing how great a strain we may bring on any seam of a boiler by unequal temperatures. We have no instruments to measure it. While we may be perfectly certain in regard to the value of the material we use, and its value so long as conditions are uniform, all those disappear when causes which we cannot measure obtain, and it would seem to indicate that to secure absolute safety we must work in a direction that will enable us to judge with some degree of certainty when the dangerous limit is being approached by these strains of unequal temperatures. This is one particular point which I will endeavor to cover in a future paper, also a possible seam which I think will meet the case, and upon which experiments are now being made, and special machinery has been constructed for making it. I hope to add something to our knowledge in regard to boiler construction that will be entirely in advance of what we have at present.

The President.—Reference has been made in this discussion to two or three matters which indicate the value that may result from the subject started during this session, in the direction of securing standards. Here we have been discussing the proper form of riveted joints, a subject that every boiler-maker has been over and over hundreds of times, and which is still being done all over this country as well as others. Surely a great economy of time and thought would be accomplished, had we some series of standard forms of riveted joints which could be referred to in some distinct manner by number, and the adoption of which for any particular case would indicate a definite character of joint, a definite ratio of strength relatively to the section of the sheet. The same thing is true of the point which Mr. Hutton has referred to—the manner of making tests—and it is hoped that the work of the committee of the Society which has that matter under consideration will be accomplished during this year, and that the result will be conducive to the adoption of some standard form of making tests whereby the tests made in various places shall be comparable.

As pertinent to that matter I wish to record my own hope that the tendency will be in the preparation of formulas in which strength of materials is involved, to the substitution of figures indicating elastic strength rather than ultimate strength. We are all

coming to recognize more and more the fact that the elastic limit of a material is the true factor that we have to deal with, and certainly it would be better, as rapidly as that fact is definitely ascertained, to substitute it in our working formula for the figure indicating ultimate strength, and dividing that by some factor of safety.

Mr. Cooper.—Of course all statements and all experiments relating to boilers and boiler materials must be very interesting and very valuable, but I wish to call the attention of members to the object of this paper, which is to present a series of rules that will tell us exactly where we are with respect to the amount of material to be provided in the joints. We have for years had in all our engineering books the deductions of Fairbairn that a single riveted joint has 56.100 of the strength of the solid sheet, and that a double riveted joint has 70.100. All have used those proportions, believing them correct, because emanating from such high authority as Fairbairn. The formula of equality of areas has been embodied in the laws which govern inspection. Therefore we are required to follow them. In Philadelphia, as elsewhere, boiler joints must be made to suit the inspectors. We know that the United States government published regulations do not define the proportions of the joint at all. This calls loudly for standards, just as our President has said. But these formulas—whatever may be the opinions of engineers anywhere—must stand as a base to work from. When we come to formula 6, a boiler-maker will say: "Now, I will *not* have a joint made in which the areas of the two sections are equal, because I know by experiment that the shearing strength of an iron rivet is much less than the tensional strength of an iron plate, area for area." This formula enables him to provide exactly for these differences.

Again, if the boiler be a composite one, in which steel plates are used with iron rivets, we may insert the shearing strength, and the tensile strength as determined by experiment, into the formula. The formula meets these cases, and is just as reliable as the area or multiplication table. I think, then, this formula must stand as, at least, an effort in the line of getting at a standard, of knowing exactly from the material what strength there is in a joint, and not going by the *ipse dixit* of boiler-makers.

The remarks made by Mr. Scheffler in reference to the variable rules of inspection are very true. Boilers that will pass Philadelphia inspectors will not pass those of the United States government. The latter are not favorable to the wider pitches. We know

from experience, say for $\frac{3}{8}$ steel plates, up to $3\frac{1}{8}$ to $3\frac{1}{4}$ pitch, the boiler will be tight. But these formulæ stand sure as an engineering constant for the engineer to have by him for proportioning rivet joints.

One more remark I would make. In all engineering structures where it is important to know exactly the strains that are put upon the material, we are certainly on safer ground, when we proportion our structure according to the quality of material, and that according to what experiment has shown to be the strength of each part.

Mr. Scheffler.—There is a remark I would like to make, if I may be permitted to do so. It seems to me that formulæ 4 and 5 would be of very little service when you take number 6. It seems that formula number 6 ought to be used at all times instead of either 4 or 5, or rather formula number 4 could be substituted for number 6, eliminating n in order to use it for single riveted joints. Mr. Cooper says that the shearing strength of the rivets compared with the tensile strength of the material, whether iron or steel, ought always to come into the proper proportion of the joints. In that case number 4 and number 5 would disappear entirely.

Prof. Denton—I want to ask Mr. Cooper if he knows of any experiments upon the boiler plate in the line Mr. Parker raised, the plate being hot while testing—as hot as it would be from the action of flame. We know that this question of heat on steel plate causes it to have a certain weakness of itself aside from the weakness that the rivet might have.

Mr. Cooper.—In answer to that, I present the following table, which gives the results of experiments on the tenacity of wrought-iron and steel at different temperatures, made in the years 1832-33 by a committee of the Franklin Institute, and by Kollmann in 1877–78

Temperature.	Relative Tenacity.			
	Experiments by Com. Frank. Inst. 1832-33.	Experiments by Kollmann, 1877-78.		
Degrees Fah.	Wrought Iron.	Fibrous Wrought Iron.	Fine Grained Wrought Iron.	Bessemer Steel.
32	100.	100	100	100
212	.....	100	100	100
392	93.8	95	100	100
572	91.7	90	97	94
932	66.8	38	44	34
1292	30.0	16	23	18
1652	.....	6	12	9
1832	.....	4	7	7

The factor of safety is intended to cover this as well as irregularities of tensile strength and of workmanship.

Mr. Parker.—I would say, in regard to the question of testing under temperatures at which plates are supposed to work in practice, that such tests have been made. Much new information seems to have been pretty well established by these experiments, that were made very carefully. Samples of the material, I think, are in existence now, which show the physical action under the tests, which it may be possible for me to show to the Society; but the deductions seem to be almost conclusive that at the working temperature (the ordinary working temperature, say, of a high-pressure boiler running 150 or 160 pounds pressure) added to the increased temperature due to the double thickness at the joints, and from imperfect contact and scale or mud deposits, it certainly seems to be established that temperatures somewhere in the neighborhood of 450 to 500 degrees do obtain. Some samples of material that were tested did show a marked deterioration in value at these temperatures compared with what they showed when tested cold; and that point alone in boiler construction seems to me to be one of the most vital points to be investigated, because, as I said before, the causes that produce these excessive temperatures being admitted, we have no instruments to-day to measure the strains brought to bear from these causes, and it seems to me to be very important that we should know as far as possible what actually does take place under such conditions. I will endeavor to present a paper at our Fall Meeting upon this subject, with the method of construction of boiler proposed to meet the case.

Mr. E. F. C. Davis.—It just occurs to me that we are overlooking one very important way by which we can get at a great deal of information. Every time a boiler explodes, a full-size experiment is made under the actual working conditions of the boiler; and I think that a great deal could be learned by studying up the condition of the boiler immediately after an explosion. As far as my observation goes, I have never seen a boiler yet explode through the line of rivets, but I have seen a number explode around through the sheets, missing the rivets in a very remarkable way. I think that is a point that ought to be incorporated in the additions to this paper. I think that we can get at the actual working conditions under which boilers are used, very much better by studying explosions. The explosions, I should think, would indicate where the weak points are in a boiler.

The President.—Such a record of explosions is kept in England, and it would be very valuable if such a record could be kept in this country.

Mr. F. A. Scheffler.—The points I desire to bring forward in discussing this paper relate more particularly to those causes which in practice prevent our knowing, with absolute certainty, that the strength of a seam is, under the conditions obtaining in actual use, fully up to the theoretic deductions we obtain by the Lloyds, or Board of Trade, or Philadelphia rules. Mr. Cooper's rules of procedure seem safe and proper provided the data relating to actual values of material in shear and tension are well established and correct. Nearly all our present information on this point comes from tests made under conditions entirely different from those existing in actual use of a steam boiler. To enumerate:

First. The quality of boiler plates is not yet so uniform as to assume safely that a test only covering a percentage of the whole can be accepted as a measure of the whole.

Furthermore, the difference in value of plates by the same maker, and of the same stock, made in large sheets, as compared with plates of small sheets, varies greatly, so that the only safe way is to test every plate.

The reason of this is the difficulty of properly and uniformly heating and working a large billet as compared with the small one.

Second.—Given uniform quality, we have this additional fact. In practice the seams are (at high pressures and hot fires) raised in temperature to such a point as to very materially affect their tensile value at the working temperature.

This same increase of temperature is likewise brought about by accumulations of sediment or scale, which cause still further overheating at the seams, so that the cold test value of our plate is no basis upon which to proceed. The quality of the good boiler-rivets of commerce is much more certain than of plates, and more to be depended upon.

As Mr. Cooper states in substance, the plate is the weaker factor.

Boilers in practice seldom fail from the shearing of the rivets, but generally by fracture of the plates.

My deductions from the above are that, fully to establish reliable data upon which to apply the rules mentioned by Mr. Cooper, more knowledge and tests are necessary as to the value of boiler plates at the temperatures obtaining in actual use; and until such

knowledge is established, we are warranted in favoring the plat at the expense of the rivet, even more than suggested by M Cooper.

Too much attention is demanded by boiler users generally obtaining an absolute tight-seamed boiler in place of a stron seamed boiler, and while a tight seam is desirable, the fact remai that too large a number of rivets used to secure an absolutely tig seam may reduce the strength. (Sandy Hook and Munhall Exp Miss. River Boat Practice.)

Mr. W. H. Jenks.—In most formulæ for the proportions of riv ed joints, it is assumed that rivet and plate should be of equ strength. If any difference in the relative strength of the two allowed, it is usually with a half apology to theory for not follo ing more closely its teachings. It may not be amiss to point o that such difference is in full accord with sound theory, thou perhaps better recognized in practice than in theory.

Except for one serious defect, the "Wonderful One-Hoss Shay may be taken to represent a perfectly designed structure. At a rate, it may serve to bring out clearly the fact that a structu should be so designed that every part may be of equal strengt not at the time it is built, but at the time of its failure.

This requires the taking into consideration of at least two facto beside that of initial strength. The first and more important these is wear and tear. A good illustration of the use of th factor is furnished by the brasses and strap of a common connec ing-rod. There being no wear on the end of the strap, its dime sions may be determined with reference to stiffness only. Tl brasses, being subject to wear, must, beside the thickness need for strength, have an additional allowance of the probable amou of wear.

The second factor to be taken into consideration is the prob bility of failure. It is evident that if, of any two pieces in structure, one will fail A times for every B time that the seco will fail, if A be greater than B, the first piece should be strengt ened until what may be called the probability of failure becom equal for both.

Applying these principles to the discussion of riveted seams f boilers, we find that both the wear and tear, and the probability failure, are greater for the plate than for the rivet.

Corrosion, which affects the rivet little if at all, may affect t plate iously. An old boiler cut apart will often show the plat

eaten away between the rivets till quite thin, while a well-defined ring around the rivet-hole shows the plate of full thickness where protected by the rivet-head. The strain brought about by uneven heating also may tend to cause fatigue in the material of the plates, while affecting the rivets but little.

Under the heading of probability would come the chance of a crack starting elsewhere in the plate and running into the seam, where it may follow the course of the rivet-holes, tearing the sheet in detail from hole to hole.

A flaw in the material also is both more likely to occur, and more serious in its effects, in the plate than in the rivets. Accordingly, the strictly logical method of proportioning rivet to plate would be: first, to fix a minimum strength below which neither should go; second, to increase the relative strength of the plate by a sufficient allowance for wear and tear; and third, to still further increase slightly the relative strength of the plate by an amount sufficient to cover the greater probability of failure.

This relative probability of failure in plate and in rivet would have to be determined from the recorded failures of boilers in actual use; leaving out of consideration, of course, all failures except those that occur in the riveted seams.

It may be bold to criticise established practice, but I have not myself met nor can I recall any case in which a boiler in use has failed through weakness of the rivets, and I believe that both sound theory and good practice would indicate a greater proportionate strength in the plate than in the rivet. A boiler so proportioned would have less strength when new; but taking its whole life into consideration, its average strength would be higher, and its probable life longer.

CCCXLIX.

STEAM CONSUMPTION OF ENGINES AT VARIOUS SPEEDS.

BY JAMES E. DENTON, AND D. S. JACOBUS, HOBOKEN, N. J.

(Members of the Society.)

INTRODUCTION.

THE investigation herein recorded was made upon a 17 × 30 steam engine driving one of the air compressors of the Rand Drill Co., used in the construction of the new Croton Aqueduct. A general view of the engine is shown in an accompanying plate (Fig. 192). *A* is the steam cylinder tested, whose exhaust pipe, *E*, led into the surface condenser, *D*, whence condensed steam was led by a pipe, *K*, to weighing barrels, *F*. *C* is the companion engine, whose exhaust escaped into the atmosphere.

The cut-off in *A* was adjusted by a hand-wheel, *G*; *H* is a speed indicator; *I* is a revolution-counter; *Q* is a clamp for holding the air-inlet valves open (Fig. 192).

It will be seen that a pair of steam cylinders, *A* and *C*, operated two air-compressing cylinders, *B* and *S*. The steam cylinders were connected by right-angled cranks, and a liberal fly-wheel was provided. The steam valves were of the riding cut-off or Meyer type, the cut-off being adjustable by the hand-wheel, *G*, to any point from zero to seven-eighths of the stroke.

By running cylinder *C*, at seven-eighths cut-off, under throttle, and varying the resistance to the motion of the pistons, through the double adjustment afforded by the regulation of the outlet to the compressed air at *J*, and of the inlet valves of the air cylinder, *S*, with the clamp, *Q*, a range of speed from 90 to 9 revolutions per minute could be obtained for any cut-off from seven-eighths to one twenty-fifth stroke at any boiler pressure between 90 and 30 lbs. per square inch. In other words, the resistance to the engine could be varied independently of the speed, and the means of absorbing power were such that any given resistance could be maintained practically constant for any desired period of time.

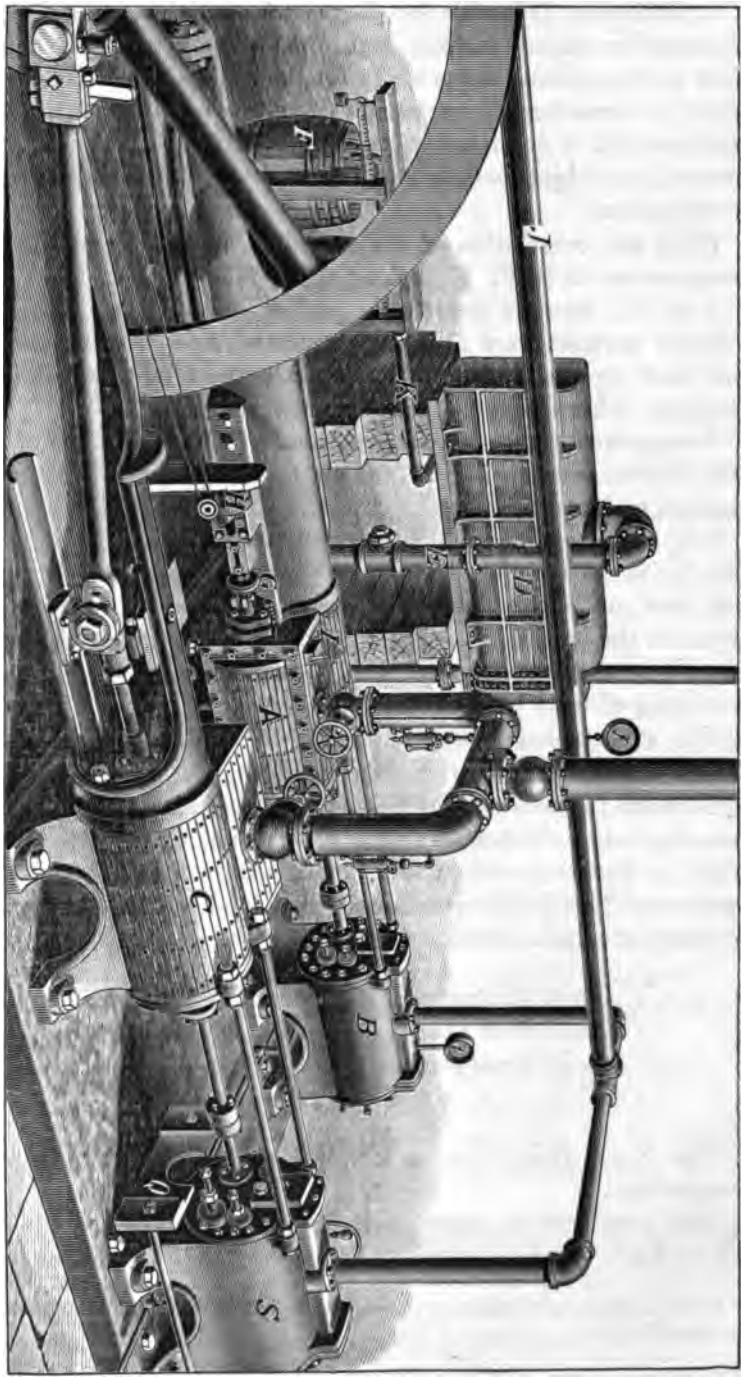

FIG. 192.

Conditions so favorable for the accurate measurement of steam consumption under various conditions seemed to the writers to form an exceptional opportunity for the collection of data on the effect of considerable variations of piston speed upon cylinder condensation of non-condensing engines, which, so far as they are aware, is a subject which has received very little experimental investigation.

Upon the completion of the aqueduct it was found that the compressors at Shaft 17, belonging to Messrs. Breuchaud, Pennell & Co., were in practically perfect order. The valve and cylinder surfaces were absolutely true and free of scratches, and the most rigorous tests failed to show the slightest leakage of steam at either the valve faces or piston rings.

Arrangements were accordingly made to have the use of this compressor, and two 75 H.P. boilers for the purpose of the investigation under notice.

One steam cylinder, *A*, was connected to discharge its steam into the surface condenser, *D*, and the consumption of this cylinder was made the subject of measurement, by weighing the steam in the barrels, *F*. The exhaust of the cylinder *C*, was led directly to the atmosphere. Circulating water for the condenser was pumped from the aqueduct shaft.

The surface condenser, containing 440 square feet of surface, was kindly loaned by Mr. F. M. Wheeler.

Through the courtesy of Messrs. Breuchaud & Pennell, suitable laboring help, vehicles, and pumps, were made available for the rapid preparation and prosecution of the test, and the following gentlemen * cordially contributed to a fund which was devoted to meeting certain necessary expenses:

Thos. F. Rowland,	Trustees of the Stevens Institute,
Rand Drill Co.,	Babcock & Wilcox Co.,
A. P. Trautwein,	H. C. White,

F. E. Idell.

The Rand Drill Co. also supplied expert labor to operate the compressor.

The total cost in money actually paid out to date amounts to about $800, which is distributed according to the following items:

[* The authors have forborne to mention their own material contributions.—SECRETARY.]

EXPENSES OF TEST.

Special castings for connecting surface condenser	$20 77
Covering steam pipes	20 56
Board of 3 assistants, 10 days	39 50
Services of 3 assistants, 10 days	57 20
Pipe fittings, valves, and connections purchased	64 07
Coal for compressors	108 90
Coal for pump, 10 tons at $4.50	45 00
Freight on surface condenser and fittings	18 45
Wages of fireman, laborer, and machinist and team	93 00
Special steam gauge	6 60
Expressage and repairs to inspirator	25 94
Services of engineer, 15 days at $2.50	37 50
Photographic views	15 00
Clerical services of assistants on calculations and draughting to date, at 25 cents per hour	250 00
	$802 49

Preparations for the work were in progress as early as the last of July, 1888, but the tests upon which investigation rests were confined to the seven days between November 21 and 27, during which interval about 52 tests were made, involving about 500 indicator measurements, all of which have been carefully "worked up" in the results now presented.

The arrangement of the apparatus was such that all data could be taken by two people. Hence, by working in turn with one and the same assistant, the writers were able to confine the observation of all data to three persons. This, in connection with the fact that none of the measurements reported were commenced until several preliminary tests were made, encourages them to believe that no serious irregularities occur in any of the measurements, the greatest being the case of Tests 18 and 19, where the proper order of water consumption is evidently violated. An account of the errors to which the preliminary indicator work was found subject is given in the text, p. 734.

It is believed that the indicator measurements submitted contain no error amounting to as much as 2 per cent.

Regarding the theoretical error of the water measurements made over short intervals of time, it is doubtless necessary to offer a careful explanation.

The method pursued was to run steam into one and the same weighing barrel until not less than about 100 lbs. was accumulated, and then to weigh within a quarter of a pound. The total possible error would therefore be one half per cent., provided that the

rate of consumption can become uniform in the short time devoted to the accumulation of the steam weighed. Now, experiments made by the writers on both this and other * engines have shown that an engine which is steadily running under any particular condition of pressure and cut-off will settle to a uniform condition of consumption under any other cut-off in five minutes of time. Hence, if no test is started until the engine has been running steadily under one set of conditions for ten or fifteen minutes, the water consumption determined for any interval not less than five minutes will be simply the error due to the limits of weighing, so far as the engine is concerned. But if the flow through the condenser cannot vary simultaneously with slight fluctuations of speed and pressure in the cylinder, there will be an additional error. In the case under notice the flow through the condenser was very sensitive. For example, the following are the weighings for the case of a large and small rate of flow, respectively:

Time.	Reading of counter.	Weight of water per 5 minutes. lbs.	Revs. per 5 minutes.
11.50	350		
11.55	701	286	351
12.00	1,040	285	339
12.05	1,378	283	338
12.10	1,721	285½	343
12.15	2,073	286	352
12.20	2,433	286	360
		1,711½	
4.50	373		
4.55	412	18½	39
5.00	454½	20½	42½
5.05	497	20½	42½
5.10	537	18½	40
5.15	574	18	37
		95¾	

It is seen that the rate of flow responds in its variations to the changes of speed, but that the readings at the beginning and end of the test are liable to be in the *process* of changing to accommodate themselves to a change of speed.

In the case of the large weighings, the consequent error in the total result is neglectable.

* See discussion of paper of C. E. Emery, Am. Soc. Mech. Engineers, 1888-89 and Stevens' Indicator, January, 1889.

For the small weighings it might amount to 3 pounds in 95 pounds, or say 3½ per cent.

As this case is about the minimum rate of flow, it may be concluded that the instrumental error of water consumption determinations is not greater than 3½ per cent. for a total consumption of 200 lbs. per hour, and is proportionately less as the rate of consumption per unit of time is greater than this amount.

To determine the probable accidental error, certain tests were repeated at times several days after the original measurement. The greatest discrepancy found (see Tests 18 and 19, Table I.) was 7 per cent. measured upon the water per hour per H.P, which includes the combined error of the water and indicator determinations. Other duplications (see Tests Nos. 29 and 30, 44 and 45, and 23, 24, and 25, Table I.) indicate that the average discrepancy may be accepted as 3 per cent., making the probable discrepancy of any result, except Tests 18 and 19, about 1½ per cent.

Steam was brought from the boilers to the engine through a 5-inch pipe about 35 feet in length, connecting to the two boiler drums by two lengths of 3½-inch pipe, with a globe and safety-valve obstruction between the latter and the interior of the drums. This piping was newly covered with 1″ felt and canvas before the tests reported were commenced.

The loss of pressure between the boiler and engine varied from zero to 1.5 lbs. per square inch, the latter loss occurring for a velocity of flow through the 5-inch pipe equal to about 95 feet per second.

The quality of the steam was determined by the appearance of jets* at the boiler drum and steam chest. The steam was undoubtedly within less than 1 per cent. of dryness.

To facilitate the comparison of our own deductions from the data presented, with conclusions resulting from the possible study of the same data by others, we give in detail, in Table II., the values of the various quantities involved in the calculations, as they have been used by us.

PRINCIPAL RESULTS AND CONCLUSIONS.

Table I. summarizes the principal deductions drawn from the investigation, and Figs. 193 and 194 exhibit the general relation of the majority of the important factors of the subject.

* See views 61 and 67. Paper on "Identification of Dry Steam." Trans. Am. Soc. M. E. 1888-1889.

GENERAL CONCLUSIONS.

I. Inspection of the upper group of curves in Fig. 193 shows that there is a distinct gain in economy of steam as the speed increases for one-half, one-eighth, and one-fourth cut-off at 90 lbs. pressure; that the loss in economy for about one-fourth cut-off is at the rate of $\frac{1}{12}$ lb. of water per H.P. for each decrease of a revolution per minute from 86 to 26 revolutions, and at the rate of $\frac{5}{8}$ lb. of water below 26 revolutions. Also, at all speeds the one-fourth cut-off is more economical than either the one-half or one-eighth cut-off.

One-half cut-off should be less economical than one-fourth cut-off for 90 lbs. boiler pressure, without any consideration of cylinder condensation.

One-eighth cut-off, however, should, by the theory of expansion, be more economical than one-fourth cut-off, so that the fact that such is not the case is ascribable only to cylinder condensation.

II. Inspection of Fig. 194 shows the superior economy of 90 lbs. boiler pressure to 60 and 30 lbs. pressure at ordinary speeds and cut-offs. A study of columns 18 and 19, Table I. shows that the superior economy of the higher pressures is not due to differences of cylinder condensation. Consequently the difference is due simply to the greater proportion which the back pressure bears to boiler pressure, as the latter is less. For, neglecting the very small influence of the variable density of steam pressure, for equal ratios of expansion, equal clearance, and equal ratio of back pressure to boiler pressure, the economy of steam consumption is theoretically equal for all boiler pressures.

Fig. 194 also shows that at 90 lbs. boiler pressure and about one-third cut-off, to produce a given H.P., requires about 20 per cent. less steam than to cut off at seven-eighths stroke and regulate by the throttle.

For the same conditions with 60 lbs. boiler pressure, to obtain, by throttling, the same mean effective pressure at seven-eighths cut-off that is obtained by cutting off at about one-third, requires about 30 per cent. more steam than for the latter condition.

III. The actual minimum water consumption of the engine is seen by Fig. 194 and Table I. Col. 15, to be at about one-fourth cut-off. For 90 lbs. boiler pressure the consumption was 27.5 lbs. at 60 revolutions, and 26.5 lbs. at 90 revolutions.

The clearance of the engine was, however, unnecessarily exces-

sive, an error of one-fourth inch in the stroke, and accidental shifting of a core made during the engine's construction, causing the clearance to be more than probably any of the other compressors of the same make used on the aqueduct. Should the clearance be 3 per cent., as might easily be the case if desired, the consumption attainable per hour per H.P. may be regarded as about 25.5 lbs. at about one-fourth cut-off, 90 revolutions per minute, and 90 lbs. boiler pressure.

IV. It may be found by a study of Table II. that the throttling tests undoubtedly had the advantage of whatever superheating is to be derived from wire drawing, for the percentage of water not accounted for by the indicator is the least for the throttling tests. Thus, in Test 34, in which steam at 90 lbs. was throttled to about 37 lbs., we have only about 9 per cent. of steam not accounted for by indicator. And in Test 35 only an average of about 1¼ *per cent.* is not accounted for, the throttling being from 90 lbs. to about 15 lbs.

An average of these two cases would be to have a mean effective pressure of about 25 lbs.

This is nearly realized in the case of Test 45, which gives 23.45 lbs. mean effective pressure by steam of 27.4 lbs. boiler pressure acting with seven-eighths cut-off. This case gives 15 *per cent. of steam unaccounted for by the indicator.*

Evidently steam throttled from 90 lbs. to an extent which would afford 23.45 lbs. mean effective pressure would give somewhere about 5 per cent. as the steam unaccounted for or condensed by cylinder condensation, and the difference between this value and 15 per cent. for Test 45 is fairly attributable to the superheating due to the throttling, and there is a consequent saving in steam consumption per H.P. between the average for 34 and 35 and for 45, equal to $56.87 - 47.8 = 9$ lbs. or about 16 per cent. This represents the advantage of obtaining a given H.P. at a fixed cut-off by carrying a high boiler pressure and throttling to a low initial pressure, rather than using a boiler pressure very little above the desired initial cylinder pressure. But if we seek the water consumption for a case where practically the same mean effective pressure is obtained with ordinary ranges of expansion, we find that any such saving due to superheating by throttling, as is indicated above, is quite incapable of competing with the saving involved in the use of the principle of expansion.* Thus we have

* See Rankine's Steam Engine, page 416.

in Test 38, for 60 pounds boiler pressure and about three-tenths cut-off, a mean effective pressure of 27.4 lbs. and a water consumption of only 31.6 lbs., or a saving of one-third of the throttling consumption just quoted.

Again in Test 30, for 90 lbs. boiler pressure and about one-eighth cut-off, we have 22.7 lbs. mean effective pressure and a water consumption of 29.5 lbs. per H.P. or nearly a saving of 40 per cent. of the throttling consumption.

Tests 32 and 36 show nearly the same mean effective pressures and speed. In the former, steam at 90 lbs. is throttled to about 50 lbs., and the consumption per H.P. is 37.93 lbs.

In the latter, steam at 56 lbs. is used with seven-eighths cut-off, and gives a consumption per H.P. of 39.9 lbs. The advantage here shown by the throttling conditions is due to so comparatively small an amount of superheating that it could not appear unless the steam entering the engine was entirely devoid of moisture. Theoretically the amount of superheating due to throttling steam cannot exceed, but may practically equal, the following amounts:

Steam throttled from 90 lbs. to 50 lbs., degrees of superheating=21
" " " " " " 13 " " " " =55

V. Column 27 of Table I. shows the average loss of pressure during admission, and column 28 the loss at the point of cut-off as determined by Rankine's method (see p. 16); it does not appear that any regular law controls the figures in these columns. For ordinary cut-offs between $\frac{1}{2}$ and $\frac{1}{5}$ at 90 and 60 lbs. boiler pressure the loss of pressure is about 6 lbs. for 100 feet velocity per second, calculated as explained, p. 16. For 30 lbs. boiler pressure one-half of this drop occurs; roughly, the variation with velocity appears to increase about as the square of the velocity below 100 feet per second, and above 100 feet per second directly as the velocity. If the velocity is less than 50 feet per second, the loss may be considered neglectable at ordinary cut-offs.

GENERAL DEDUCTIONS REGARDING CYLINDER CONDENSATION.

It has been impossible to analyze in time for the present meeting the data regarding liquefaction of steam by cylinder condensation, with a view to determine any even approximate law underlying the quantities of steam liquefied under the various conditions covered in the investigation.

Some general statements may, however, be made at this time, as follows:

I. Inspection of the indicator cards shows that re-evaporation commenced as soon as the valve closed, and that the liquefaction of steam was practically confined to the period of admission.

II. If we adopt the idea that the condensation per stroke is proportional to the surface to which steam is exposed during admission, to the time of such exposure, and to the range of temperature due expansion, then the following quantity should have a constant value for the different tests.

$$C = \frac{\text{lbs. of steam liquefied per stroke.}}{\left\{\begin{matrix}\text{Twice surface of pis-}\\ \text{ton, plus surface of}\\ \text{cylinder to cut-off.}\end{matrix}\right\} \times \left(\begin{matrix}\text{time of ad-}\\ \text{mission.}\end{matrix}\right) \times \left(\begin{matrix}\text{diff. of temp.}\\ \text{due expansion}\end{matrix}\right)}$$

Column 25 of Table I. gives values of this quantity which vary from 0.27 to 0.83.

Table A., giving values of C, is selected from the general table. It shows values of C in the columns headed *Ratio*. It will be seen by inspection of Sections I. to IV. of this table, that, for a fixed speed and pressure, C tends to confine its value within a comparatively narrow range of variation, as the cut-off varies. Thus, by Section I., C varies from 0.48 at six-tenths cut-off, to 0.83 at one-twenty-fifth cut-off, and by Section IV. the variation is from 0.43 to 0.69 for a greater range of cut-offs.

The low values of C, in Sections VI. and VIII., at cut-offs less than seven-eighths, do not appear to be due, to any great degree, to the excessive re-evaporation which is shown by the indicator cards for these cases.

Sections VII. and VIII. show that, for equal speed and cut-off, the least value of C occurs with the lowest boiler pressure, although V. and VI. contain notable exceptions to this rule. Per horse power, for ordinary speeds, the per cent. of water not accounted for by the indicator does not materially differ with the pressure. (See columns 16 and 17, Table I.)

III. If we select from Table I. cases for which the values of the product of "surface" × "time" × "diff. of temp." are nearly the same, the groups shown in Table B are obtained. This shows a tendency towards the same order of values in the steam condensed per stroke, and the product in the second column; but it is evident that the former quantity varies more slowly than the latter.

The results for Test No. 1, compared with No. 37, and No. 50 with No. 13, show that the condensation per stroke is less, the lower the boiler pressure,—the other conditions being equal.

It is evident that the variation of speed is the most important factor of the law of the cylinder condensation for widely varying conditions, as indicated by the diagrams of Figs. 193 and 194.

IV. Column 23 of Table I. shows the pounds of water that would be raised through the range of temperature due expansion by the latent heat of the liquefied steam.

These vary from 0.01 for the greatest "throttling" test, to 30 lbs. for the very slow speeds and low pressure. The average weight would be about 5 lbs. The weight of iron which would be raised through the same temperature is about nine times the weight of water. It would therefore average 45 lbs., and reach 270 lbs. as a maximum, which would correspond to about one-fortieth and one-sixth of the weight of the cylinder and piston.

TABLE A.

CUT-OFF VARIABLE. STEAM PRESSURE 90 LBS. PER SQUARE INCH.

I. HIGH SPEED.			II. INTERMEDIATE SPEED.			III. SLOW SPEED.		
Cut-off	Rev. per minute.	Ratio *C.*	Cut-off.	Rev. per minute.	Ratio *C.*	Cut-off.	Rev. per minute.	Ratio *C.*
59.9	61.6	.48	59.9	25.7	.45	59.9	8.9	.32
31.3	61.8	.66	31.3	28.6	.52	31.3	8.6	.35
18.2	62.5	.71	18.2	25.6	.51	18.2	8.6	.42
12.6	60.1	.78						
6.9	59.1	.82						
4.4	58.6	.83						

CUT-OFF VARIABLE. STEAM PRESSURE 60 AND 30 LBS. PER SQUARE INCH.

60 LBS. PRESSURE.			30 LBS. PRESSURE.					
IV. HIGH SPEED.			V. HIGH SPEED.			VI. SLOW SPEED.		
Cut-off.	Rev. per minute.	Ratio *C.*	Cut-off.	Rev. per minute.	Ratio *C.*	Cut-off.	Rev. per minute.	Ratio *C.*
87.5	62.6	.67	87.5	62.6	.88	87.5	7:9	.68
			87.5	63.9	.67			
59.9	62.5	.43	59.9	61.7	.35			
31.3	62.7	.50	31.3	65.7	.31	31.3	8.1	.28
18.2	59.6	.57	18.2	62.5	.52	18.2	9.0	.27
12.6	60.1	.67						
6.9	59.0	.69						

STEAM PRESSURE VARIABLE. REVOLUTIONS AND CUT-OFF CONSTANT.

VII. CUT-OFF 59.9%. HIGH SPEED.			VIII. CUT-OFF 31.3%. SLOW SPEED.		
Pressure.	Rev. per minute.	Ratio *C.*	Pressure.	Rev. per minute.	Ratio *C.*
90	61.6	.48	90	8.6	.35
60	62.5	.43			
30	62.6	.35	30	8.1	.28

TABLE B.

No. of test.	Nearly equal values of time × Difference of temperature × Surface exposed.	Cut-off	Steam pressure.	Ratio *C.*	Steam condensed per stroke. Lbs.	Rev. per minute.	Surface × Time.
21	214	18.2	90.7	.54	.115	23.7	2.31
2–3	215	59.9	91.0	.46	.114	43.6	5.51
47	202	87.5	28.9	.68	.149	7.9	44.91
1	127	59.9	89.2	.72	.103	70.4	2.83
38	110	31.3	59.4	.50	.062	62.7	1.47
37	132	59.9	60.7	.44	.064	62 5	3.20
48	120	59.9	28.5	.35	.045	61.7	3.23
16	88	18.2	89.2	.82	.083	64.1	.85
39	87	18.2	60.5	.57	.055	59.6	.91
49	92	31.3	28.7	.31	.031	65.7	1.40
50	493	31.3	28.4	.28	.150	8.1	11.29
27	496	18.2	91.4	.37	.208	10.0	5.47
13	470	31.3	91.3	.39	.209	13.1	7.04

V. If we adopt the general idea that whatever tends to elevate the average temperature of the cylinder and piston will reduce cylinder condensation, we should expect that the greater the amount of heat or steam that was forced through a cylinder, the less would be the loss by liquefaction. But it may be seen that there i a limit to this action. Thus in test No. 8, Table I., steam to the amount of 3,161 lbs. per hour was sent through the engine at 31 per cent. cut-off, and the cost of a H. P. was 26.5 lbs. of water.

In test No. 38, 1,800 lbs. of steam per hour went through the engine at the same cut-off, but at 30 lbs. less boiler pressure, and a H. P. cost 33.17 lbs. Hence, nearly doubling the steam sent through the engine decreased the cost but about 20 per cent., fully half of which is attributable to the lower boiler pressure.

Again, in test No. 11 we have for the same boiler pressure and cut-off as No. 8 *less* than half the steam sent through the engine per unit of time, with a water consumption per H.P. only 8 per cent. greater than for No. 8.

These views make it difficult to find reasonable ground for the belief that the double amount of weight or surface brought in contact with a given weight of steam in obtaining equal H. P. in a single-acting engine—as compared with a double-acting—can render the steam consumption excessive for ordinary conditions of speed, cut-off, and boiler pressure.

DETAILS REGARDING MANIPULATION OF INDICATOR, AND METHODS OF CALCULATING RESULTS IN TABLES.

The following statement is made in order to explain to what extent precautions were observed to obtain accurate indicator cards.

The indicators were attached close to the heads of the cylinders, and the drum was given an exact motion by means of a pantagraph attached to the piston rod. Wire cord was used to connect the indicator with the pantagraph, in order that the stretching due to cotton or linen cords might be avoided. In addition to these ordinary precautions, great care was exercised to keep the indicator perfectly clean, and also to make sure that there was no lost motion in the mechanism connecting the pencil point with the piston. The indicator was at intervals tested during each test to make certain that it was perfect in this respect, in a manner that can be best explained by an examination of the cards marked Nos. 55 and 56. No. 56 is a card taken at a slow speed with an indicator in perfect condition, the line $u\,v$ being that traced by the pencil of the indicator when the engine is placed on the dead center point and the full pressure of steam brought to bear on the piston of the indicator. $x\,y$ is the atmospheric line.

In tracing both the lines $u\,v$ and $x\,y$, the pencil arm was first pushed upward, and, after releasing it, a line was traced on the paper; the arm was next pushed downward, and after again releasing it, the line was retraced and found to coincide with the first line taken. If there had been undue friction or lost motion, double lines would have been traced, as shown above and below the card marked No. 55. This test was applied at intervals during the time of taking the cards, the atmospheric line being extended past the end of the diagrams by moving the drum by

hand; the fact that the indicator was in good condition was thus recorded directly on the cards. To reduce, as far as possible, any tendency to stick at the piston, the indicator was taken apart, and its piston and cylinder thoroughly wiped and oiled at frequent intervals, without waiting for the diagrams to give evidence of defective action.

Card No. 55 shows that a smooth diagram may be obtained with an indicator that is in very bad order.

In this case, the guide attached to the indicator piston produced considerable friction, and there was also a small amount of lost motion. After relieving this friction and removing the lost motion, card No. 56 was taken. This card, which was taken at about the same speed as No. 55, shows how very misleading the results may be that are given by a faulty indicator.

Card No. 57 shows the general appearance of a card taken with an indicator that is sticking at the piston.

The scales of the indicators were in exact accordance with the steam-gauges, except for 30 pounds pressure, at which the indicator spring differed 2 pounds in 30, as compared with a standard gauge; this difference has been eliminated in the calculations. It was found that the most careful manipulation of planimeters, or averaging-instrument, is coupled with a variation in duplicate results of mean effective pressure, averaging about one-tenth of a pound, which amounts to about three-tenths of the whole pressure in the case of the cards of smallest area. Accordingly, two methods of determining the mean effective pressure have been adopted,—one by using a Coffin averaging-instrument as a planimeter to obtain the area, and dividing by the length of the card, and the other by obtaining the mean pressure directly with the same instrument. Although the theoretical error of both methods is about the same, a slightly greater agreement of consecutive measurements was found for the first method, and the results by this method are made the basis of the calculations. Columns 12 and 13 of Table I. show the figures for each method.

The planimeter was tested by moving the pointer around a circle cut in a brass plate, and also around the sides of a rectangle; the readings, when moved around the circle, agreed among themselves to within one-hundredth of a square inch, and a correction, derived by obtaining the mean of ten consecutive readings on both the circle and rectangle, was 1.0033, which, multiplied by the reading of the instrument, will give the true area.

The exact dimensions of the engine were as follows:

Stroke, 29¾ inches; bore of steam cylinder, 17 inches; diameter of head end piston-rod $2\frac{9}{16}$ inches; diameter of crank end piston-rod, $2\frac{7}{8}$ inches.

The clearance space was made up as follows:

In port through main valve		0.83	%	of piston	displacement.
" " "	cylinder	2.77	"	"	"
" head end of	"	5.18	"	"	"
" crank end of	"	1.71	"	"	"

The column headed X is a constant which, multiplied by the revolutions per minute, gives the velocity of steam through the ports in feet per second, on the basis that by this velocity is meant the product of the mean piston speed per second times the ratio of the piston area to the area of port opening. The losses of pressures due to the velocity of steam during admission is given in the last two columns of Table I. In the last of these two columns the point of cut-off used was the one determined by Rankine's method as given in his work on the steam engine, p. 417; this method consists in prolonging the expansion curve upward, and finding its intersection with a line drawn parallel to the atmospheric line through the highest point of the card. The variation of back pressure under the several conditions was too small to be made the basis of measurement, as will be evident from inspection of the plates. In column 24 of Table I. the calculation assumes the connecting-rod to be of infinite length, but allows for the variable velocity of the cross-head, due to a uniform crank motion, the time being given by the following formula: Let α be the arc in degrees, the versed sine of which is equal to twice the fraction of the stroke at which the cut-off occurs; then the time of admission, in seconds, is

$$t = \frac{1}{6N}(\alpha + 10),$$

in which N is the number of revolutions made by the crank-pin per minute.

The following table shows values of $\frac{\alpha + 10}{6}$ and of surface exposed for various cut-offs:

Cut-off.	$\frac{\alpha + 10}{6}$	Surface exposed in square feet.
4.4	5.7	3.63
6.9	6.8	3.95
12.6	8.6	4.68
18.2	10.1	5.40
31.3	13.0	7.08
59.9	18.6	10.74
87.5	24.8	14.27

The surface includes the cylindrical surface of the cylinder and piston rod (at an average diameter of $2\frac{23}{32}$ inches) up to the point of cut-off plus twice the area of the piston.

The exact dimensions of the engine were as follows:

Stroke, $29\frac{3}{4}$ inches; bore of steam cylinder, 17 inches; diameter of head end piston-rod, $2\frac{9}{16}$ inches; diameter of crank end piston-rod, $2\frac{7}{8}$ inches.

The clearance space was made up as follows:

In port through main valve		0.83	%	of piston	displacement.
" " "	cylinder	2.77	"	"	"
" head end of	"	5.18	"	"	"
" crank end of	"	1.71	"	"	"

TABLE III.

SAMPLE OF DATA OBSERVED AND METHOD OF WORKING UP EACH TEST.—TEST NO. 39.

Date.	Time.	Number of Indicator Cards.		Pressure of Steam at Engine, in lbs. per sq. in.	Reading of Revolution Counter.	Reading of Scales used in Weighing Water Consumed by Engine, in lbs.	Net Weight of Water Used. Lbs.	Mean Effective Pressure as Shown by Indicator Cards.				Absolute Pressure of Steam.					
								Head End.		Crank End.		Head End.			Crank End.		
	P.M.	Head End.	Crank End.					As Given by Area.	As Given by Averaging Instrument.	As Given by Area.	As Given by Averaging Instrument.	At Cut-off.	At Release.	At End of Compression.	At Cut-off.	At Release.	At End of Compression.
Nov. 26	3.35		506	62	0	60				18.19	18.4				51	14.7	19
		507		61			95	16.0	16.0			51.0	15.0	17.5			
	4.00		508	60	302	155				17.65	18				50.25	14.7	20.5
		509		60.5			98	15.69	15.7			50	15	17.5			
	4.05		510	60	605	253				17.91	17.49				49.5	14.7	20.25
		511		62.5			91	16.38	16.1			52.75	14.7	18			
	4.10		512	60.5	894	344.75				18.70	18.7				50	14.7	20.5
		513		61.5				15.48	15.4			50.5	15	18			
	4.15		514	60	1192					17.53	17.6				50.5	14.7	18
		515		60			190	15.09	15.0			50.00	14.7	18			
	4.20		516	59.5		265				17.81	17.8				51	14.7	18
		517		59			94.5	14.81	14.8			48.5	14.7	17.5			
	4.25				1788	329.5											
Sum.....				7265	1788		568.5	93.45	93.0	107.79	107.95	302.75	89.1	106.5	302.25	88.2	116.25
Average and Rate				60.5	59.60		1137.0	15.57	15.50	17.96	17.99	50.46	14.8	17.75	50.37	14.70	19.37

Average Mean Effective Pressure, as determined by measuring the Area of the Indicator Card = (15.57 + 17.96) ÷ 2 = 16.76
Correction to be added = 0.0033 × Reading..... ..... = 0.06

Mean Effective Pressure employed in calculations..... .... = 16.82

TESTS NOS. 1–7.

Cut-off 59.9% of Stroke
Scale.....60 lbs.

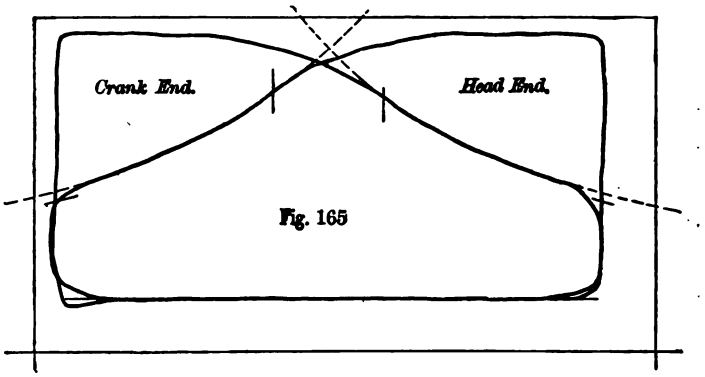

Fig. 165

Test No. 1..... .....70.38 Rev. p. min.
Steam Pressure.. .....89.2 lbs. above atm.

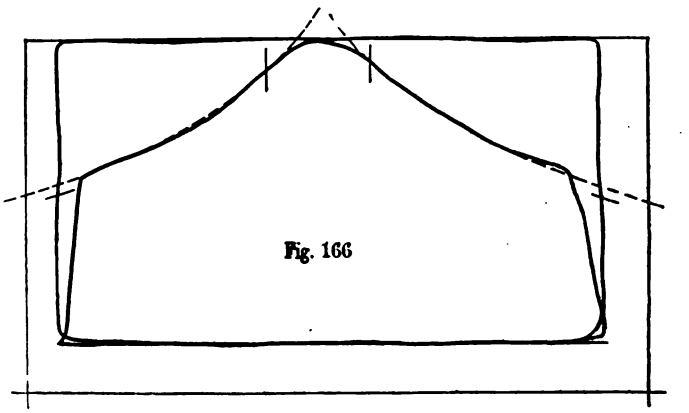

Fig. 166

Test No. 7.....8.93 Rev. p. min.
Steam Pressure.....93.4 lbs. above atm.

Dotted curves are Mariotte lines.

Vertical dashes are point of actual valve closure.

Short curved dashes are portions of adiabatics according to formula $pv^{\frac{10}{9}}$ = const.

TESTS NOS. 8–14.

Cut-off 31.3% of Stroke.
Scale..... 60 lbs.

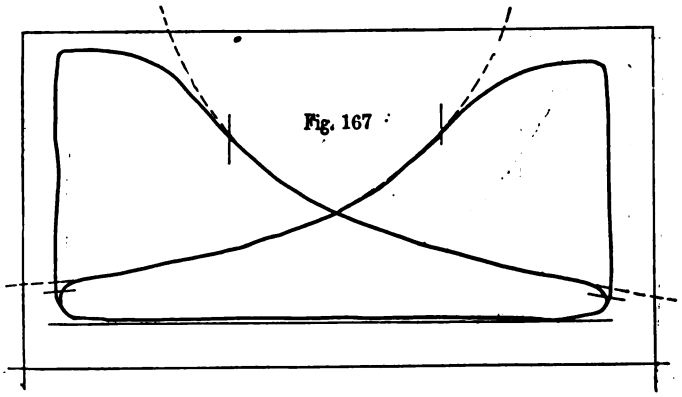

Fig. 167

Test No. 8.....87.6 Rev. p. min.
Steam Pressure.....90.6 lbs. above atm.

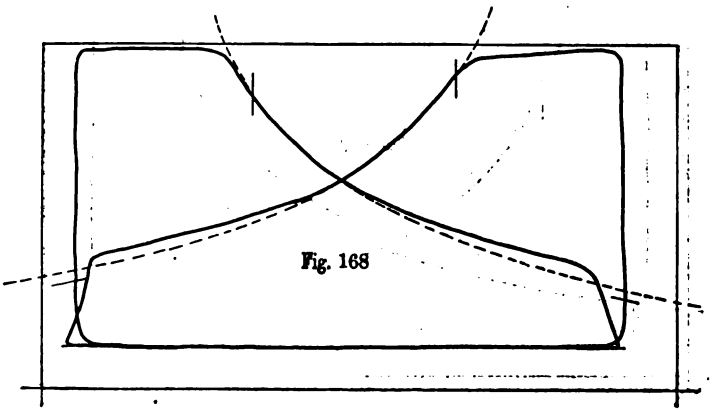

Fig. 168

Test No. 14.....8.63 Rev. p. min.
Steam Pressure.....92.3 lbs. above atm.

TESTS Nos. 15–28.

Cut-off 18.2 % of Stroke.
Scale.....60 lbs.

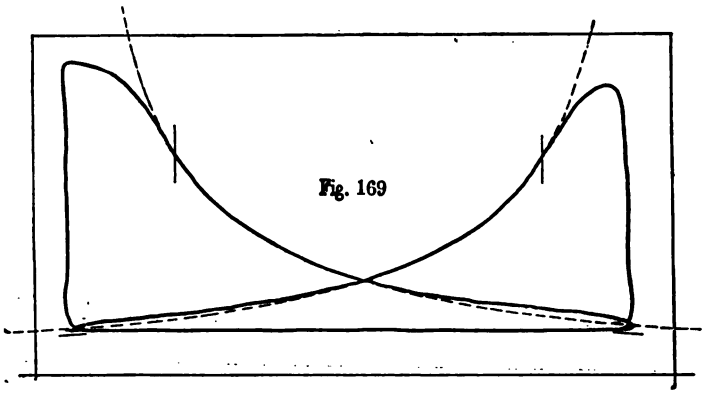

Fig. 169

Test No. 15.....86 Rev. p. min.
Steam Pressure..... ...91.9 lbs. above atm.

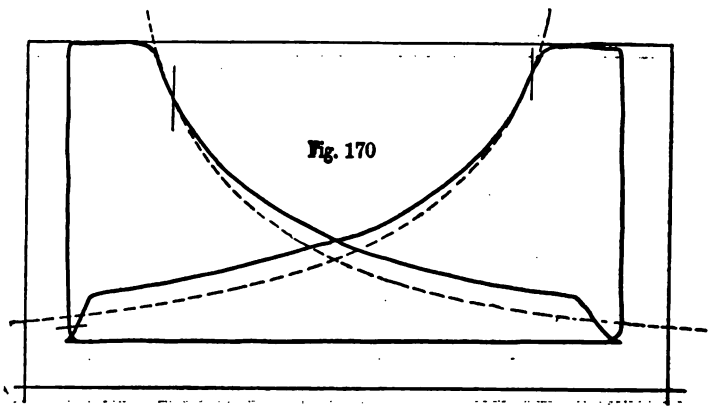

Fig. 170

Test No. 28.....8.64 Rev. p. min.
Steam Pressure.....93.7 lbs. above atm.

TEST No. 29.

Cut-off 12.6% of Stroke.

Scale.....60 lbs.

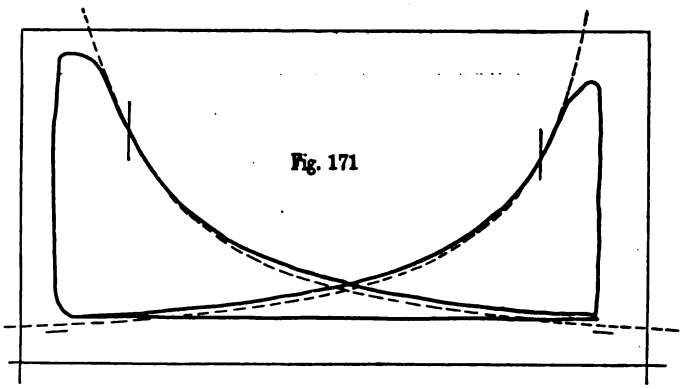

Fig. 171

Rev. p. min.....62.80.

Steam Pressure.....89.1 lbs. above atm.

TEST No. 31.

Cut-off 6.9% of Stroke.

Scale.....60 lbs.

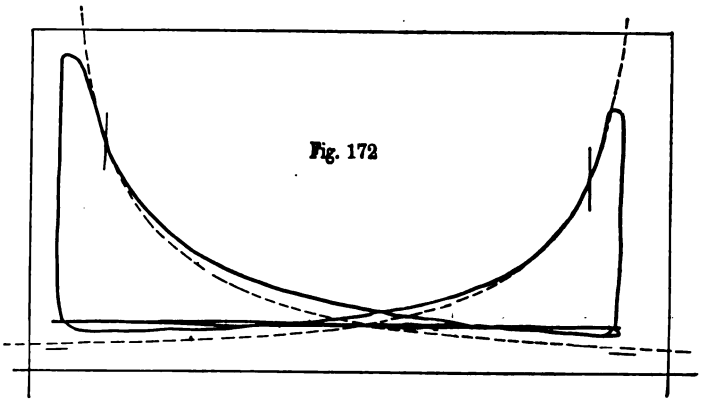

Fig. 172

Rev. p. min.....59.13.

Steam Pressure.....91.1 lbs. above atm.

TEST No. 32.

Cut-off 4.4% of Stroke.

Scale .... .60 lbs.

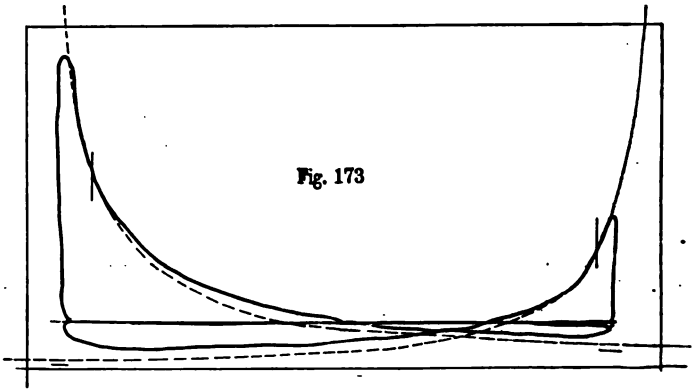

Fig. 173

Rev. p. min.....58.56.

Steam Pressure.....91.9 lbs. above atm.

TEST No. 36.

Cut-off 87.5% of Stroke.

Scale ....60 lbs.

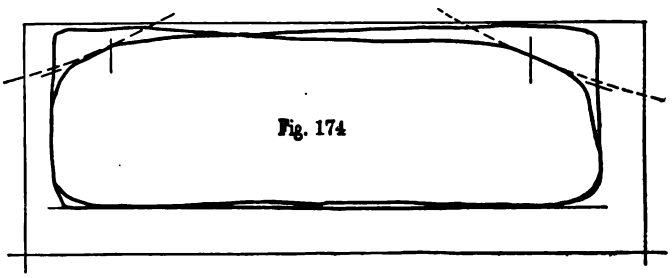

Fig. 174

Rev. p. min..... .....62.57.

Steam Pressure.....56.2 lbs. above atm.

TEST No. 37.

Cut-off 59.9 % of Stroke

Scale .....60 lbs.

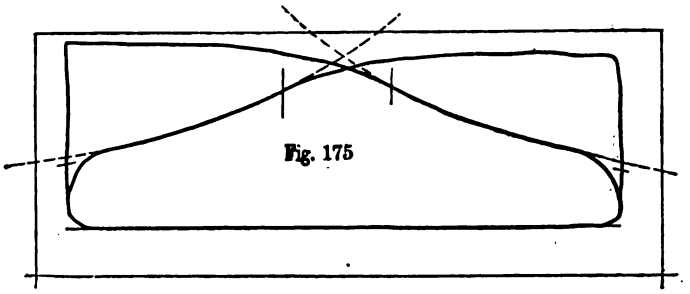

Fig. 175

Rev. p. min.....62.51.

Steam Pressure.....60.7 lbs. above atm.

TEST No. 38.

Cut-off 31.3 % of Stroke.

Scale .....60 lbs.

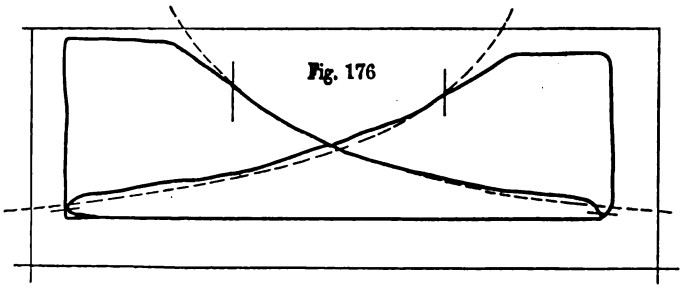

Fig. 176

Rev. p. min .....62.66.

Steam Pressure..... .....59.4 lbs. above atm

TEST No. 39.

Cut-off 18.2 % of Stroke.

Scale .....60 lbs.

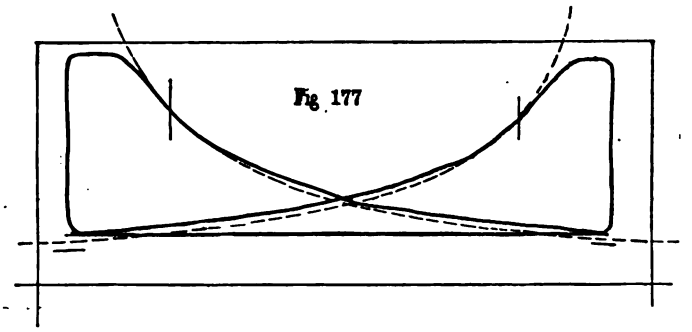

Fig. 177

Rev. p. min.....59.6.

Steam Pressure .....60.5 above atm.

TEST No. 40.

Cut-off 12.6 % of Stroke.

Scale .....60 lbs.

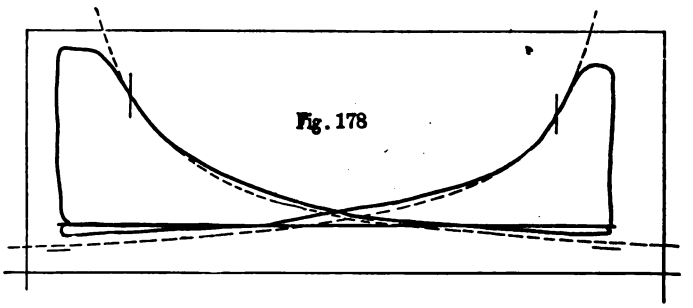

Fig. 178

Rev. p. min.....60.10.

Steam Pressure ....59.4 lbs. above atm.

TEST No. 41.

Cut-off 6.9% of Stroke.

Scale.....60 lbs.

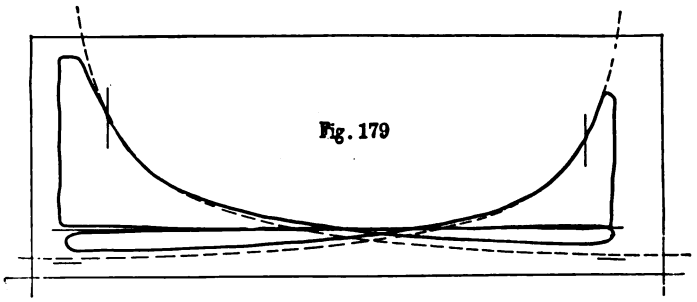

Fig. 179

Rev. p. min.....59.0.

Steam Pressure.....59.3 lbs. above atm.

TESTS NOS. 44–47.

Cut-off 87.5% of Stroke.

Scale.....20 lbs.

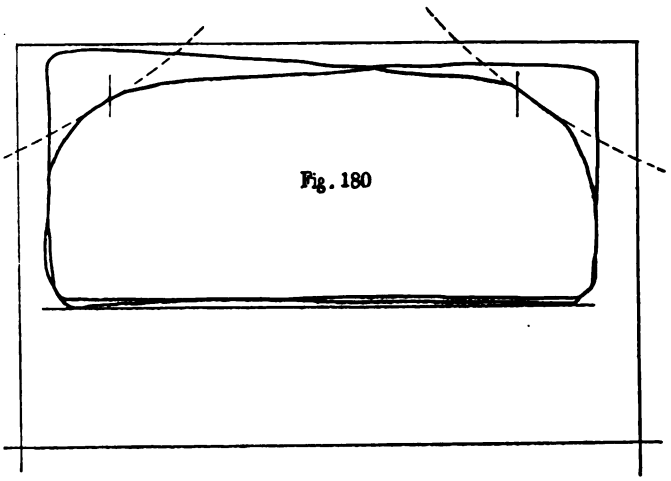

Fig. 180

Test No. 44..... .....63.87 Rev. p. min.
Steam Pressure.....27.5 lbs. above atm.

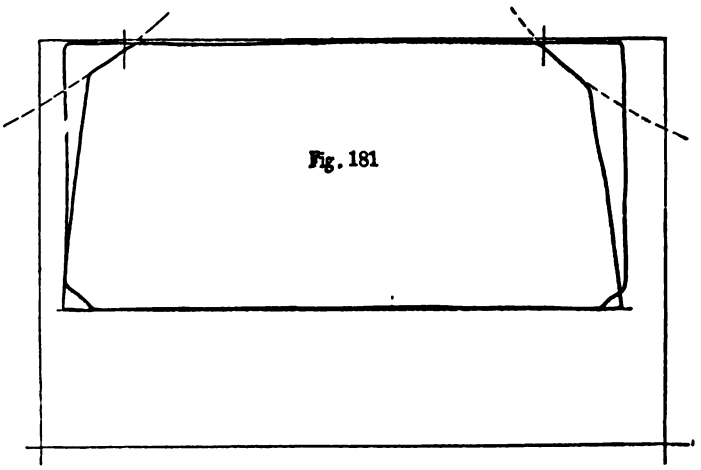

Fig. 181

Test No. 47..... ..... 7.83 Rev. p. min.
Steam Pressure..... .....28.9 lbs. above atm.

TEST No. 48.
Cut-off 59.9% of Stroke.
Scale.....20 lbs.

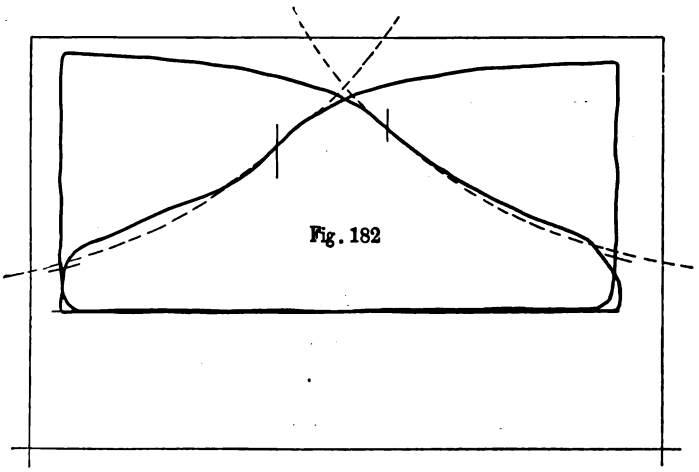

Fig. 182

Rev. p. min..... .....61.73.
Steam Pressure .....28.5 lbs. above atm.

TEST NO. 49.

Cut-off 31.3% of Stroke.

Scale .....20 lbs.

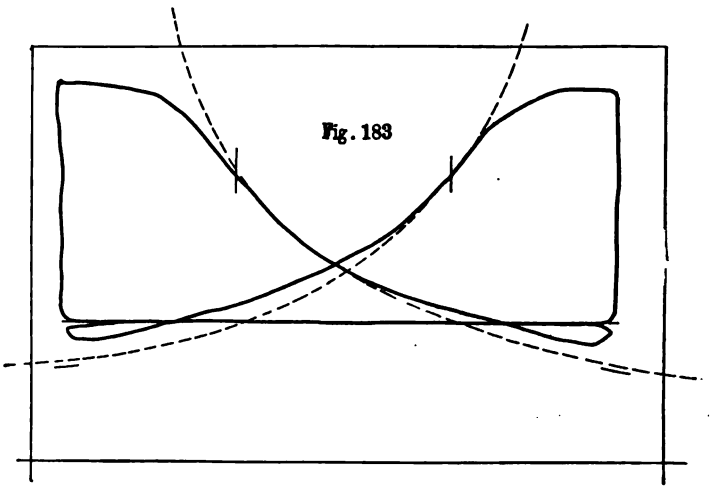

Fig. 183

Rev. p. min.....65.67.

Steam Pressure .....28.7 lbs. above atm.

TEST NO. 50.

Cut-off 31.3% of Stroke.

Scale.....20 lbs.

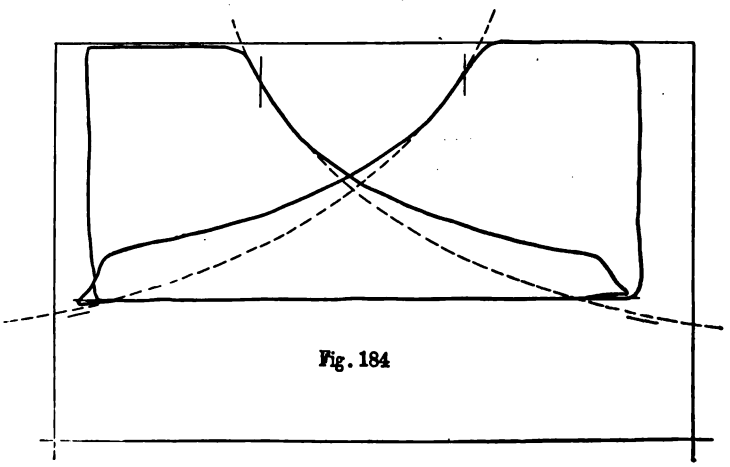

Fig. 184

Rev. p. min.....8.15.

Steam Pressure.....28.4 lbs. above atm.

TEST NO. 51.

Cut-off 18.2% of Stroke.

Scale.....20 lbs.

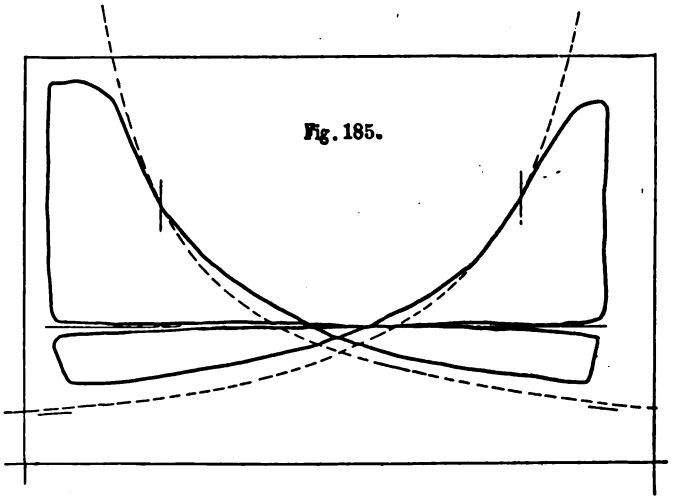

Fig. 185.

Rev. p. min.....62.47.
Steam Pressure ....28.2 lbs. above atm.

TEST NO. 52.

Cut-off 18.2% of Stroke.

Scale.....20 lbs.

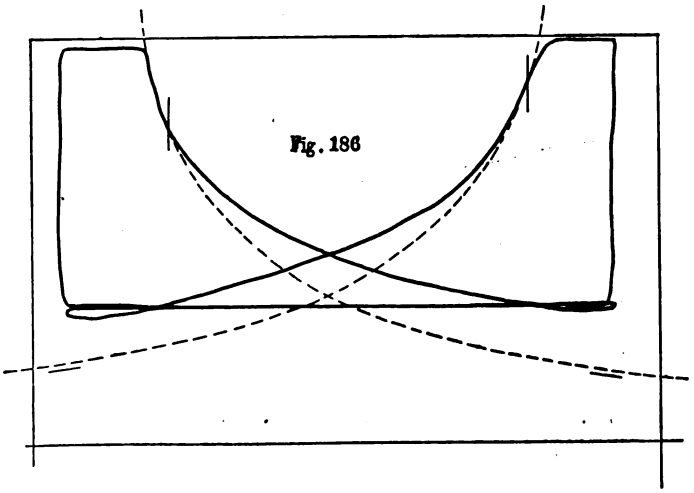

Fig. 186

Rev. p. min..... ..... 8.97.
Steam Pressure... .....28.7 lbs. above atm.

TEST No. 33.

Cut-off 87.5 % of Stroke. Throttling.

Scale .....60 lbs.

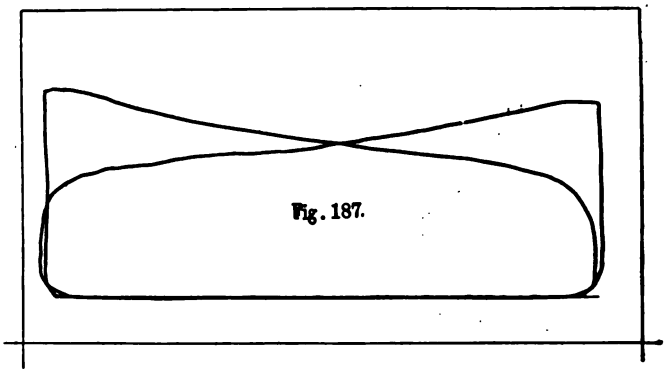

Fig. 187.

Rev. p. min.....62.16.

Steam Pressure.....89.5 lbs. above atm.

TEST No. 34.

Cut-off 87.5 % of Stroke. Throttling.

Scale .....60 lbs.

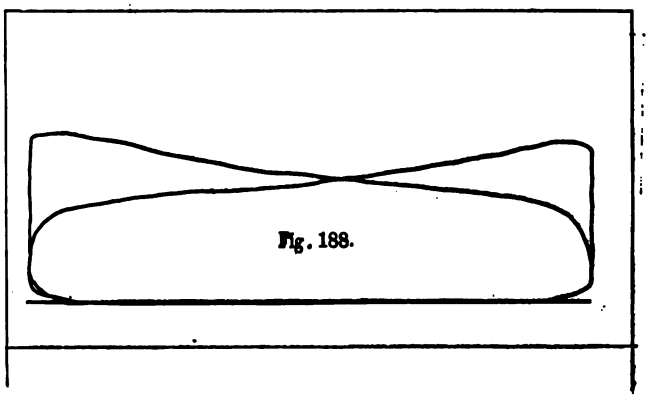

Fig. 188.

Rev. p. min .....69.43.

Steam Pressure .....89.5 lbs. above atm.

TEST NO. 35.

Cut-off 87.5% of Stroke. Throttling.
Scale ..... 60 lbs.

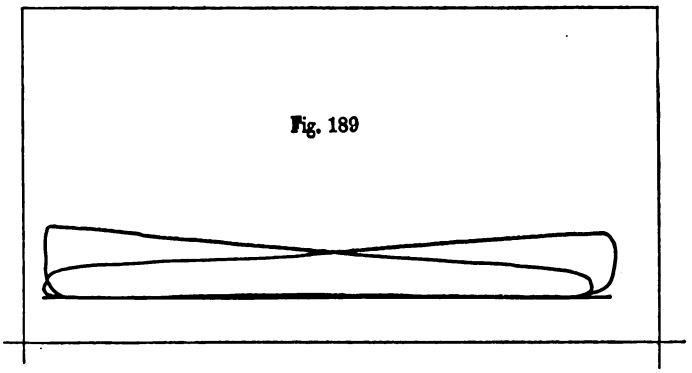

Fig. 189

Rev. p. min ..... 77.32.
Steam Pressure ..... 88.8 lbs. above atm.

TEST NO. 42.

Cut-off 87.5% of Stroke. Throttling.
Scale ..... 60 lbs.

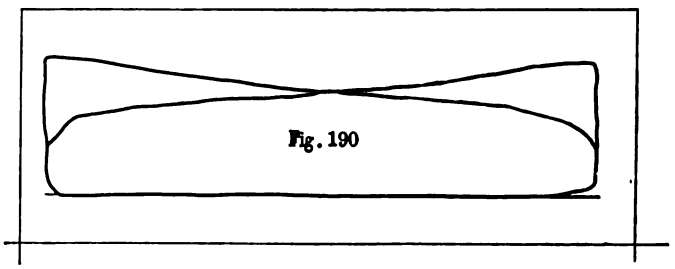

Fig. 190

Rev. p. min ..... 64.75.
Steam Pressure ..... 58.8 lbs. above atm.

TEST No. 43.

Cut-off 87.5% of Stroke. Throttling.

Scale.... ....60 lbs.

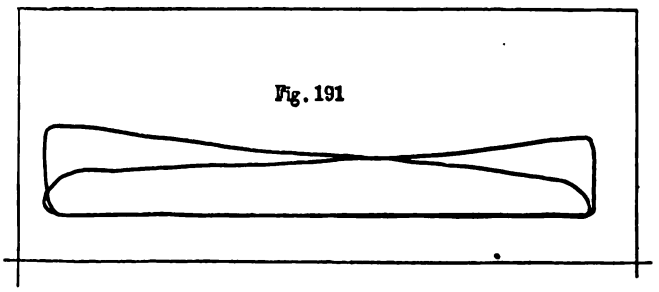

Rev. p. min..... .....59.35.

Steam Pressure.....59.8 lbs. above atm.

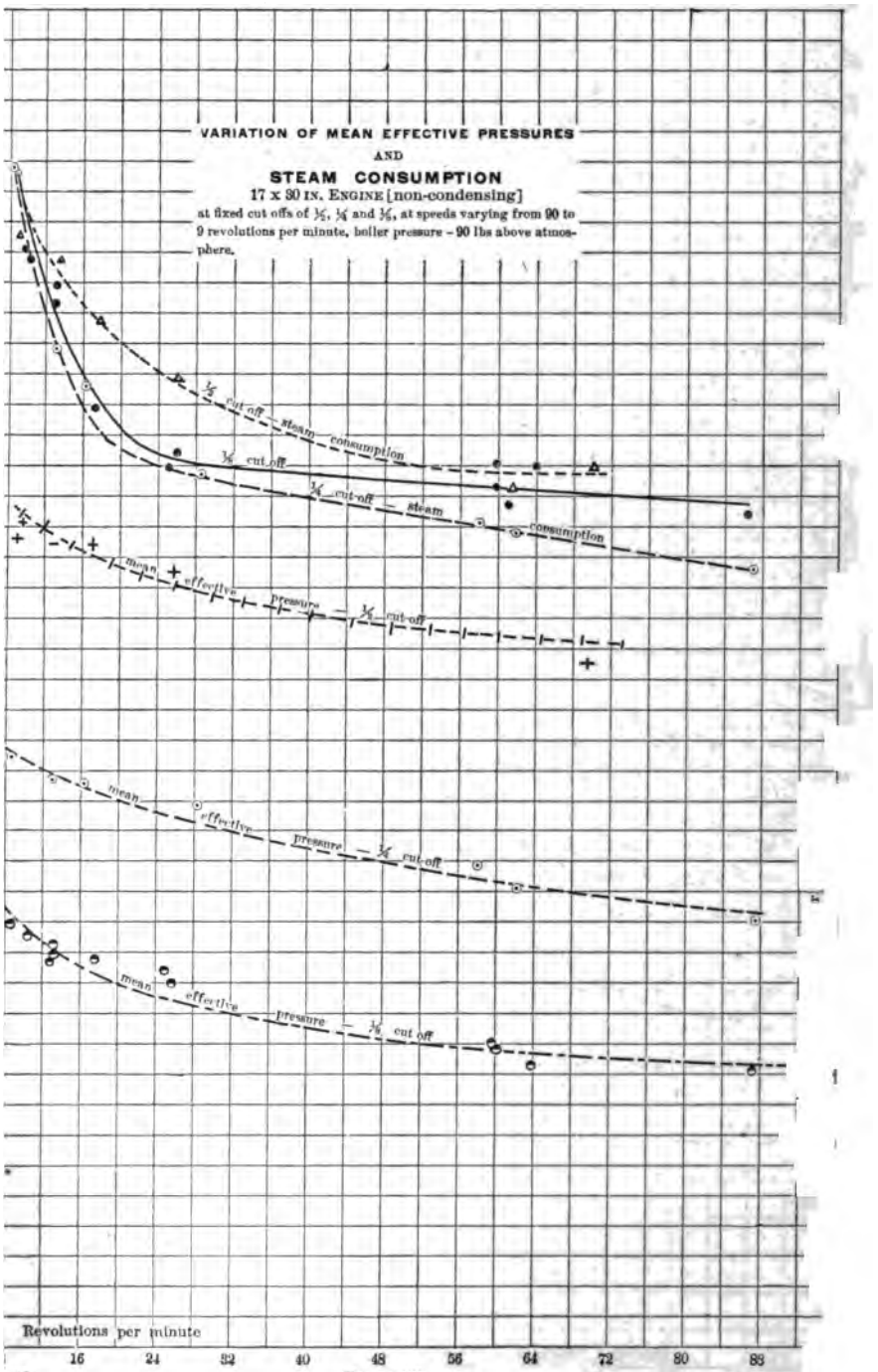
VARIATION OF MEAN EFFECTIVE PRESSURES
AND
STEAM CONSUMPTION
17 x 30 IN. ENGINE [non-condensing]
at fixed cut offs of ½, ¼ and ⅛, at speeds varying from 90 to 9 revolutions per minute, boiler pressure – 90 lbs above atmosphere.
½ cut off steam consumption
⅛ cut off
¼ cut-off steam consumption
mean effective pressure – ¼ cut-off
mean effective pressure – ¼ cut off
mean effective pressure – ⅛ cut off
Revolutions per minute
16
24
32
40
48
56
64
72
80
88

FIG. 193.

TEST No. 43.

Cut-off 87.5% of Stroke. Throttling.

Scale.... ....60 lbs.

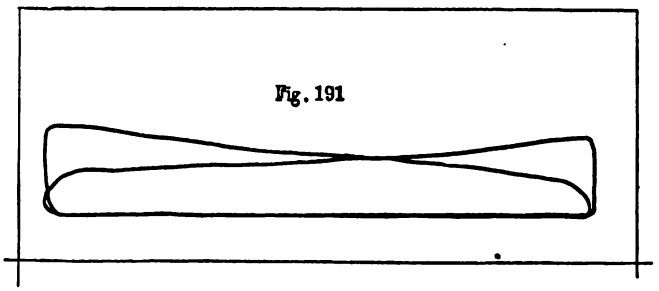

Rev. p. min..... .....59.35.

Steam Pressure.....59.3 lbs. above atm.

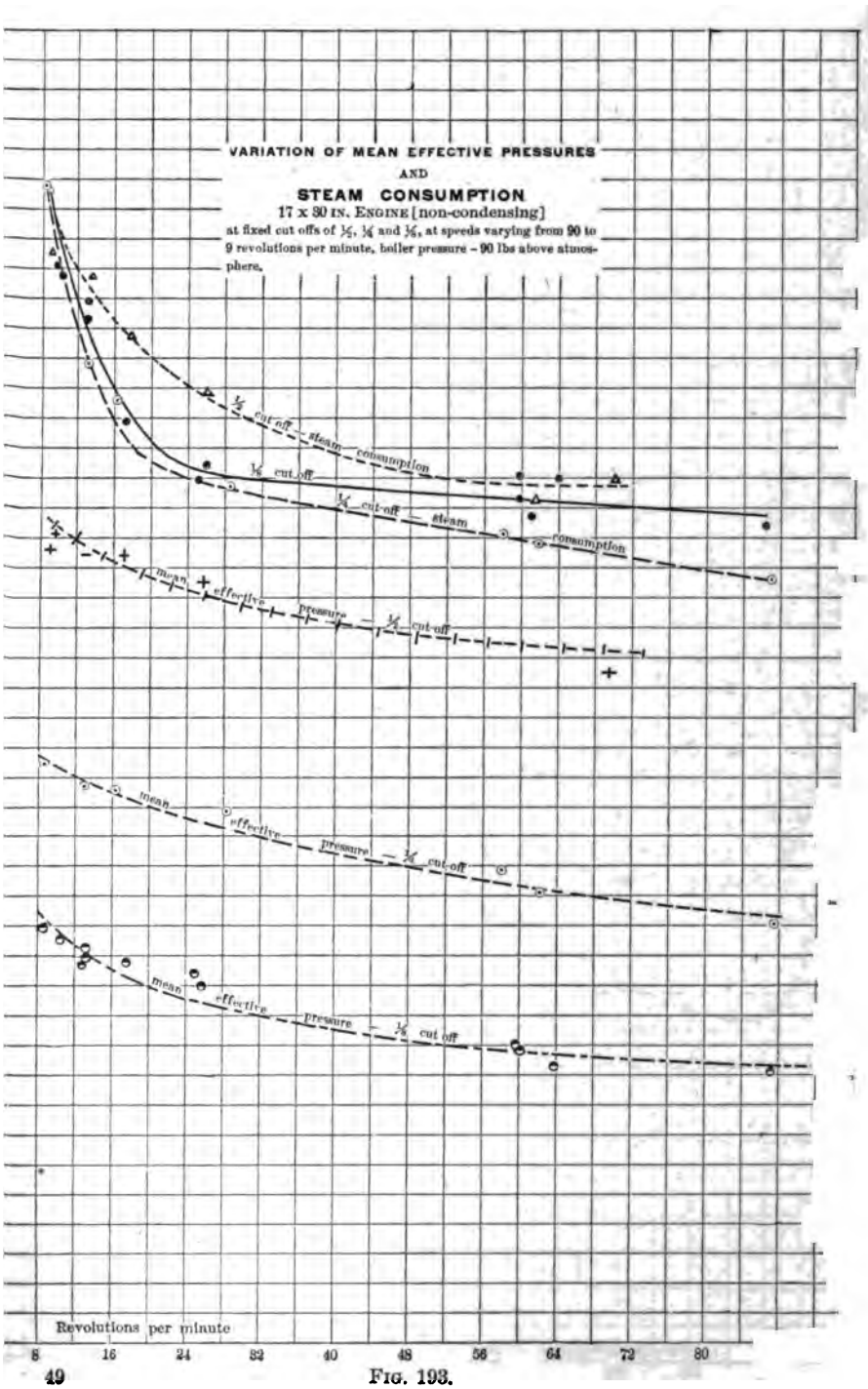
VARIATION OF MEAN EFFECTIVE PRESSURES
AND
STEAM CONSUMPTION
17 x 30 IN. ENGINE [non-condensing]
at fixed cut offs of ½, ¼ and ⅛, at speeds varying from 90 to 9 revolutions per minute, boiler pressure – 90 lbs above atmosphere.
½ cut off steam consumption
¼ cut off steam consumption
⅛ cut off steam consumption
mean effective pressure ½ cut off
mean effective pressure ¼ cut off
mean effective pressure ⅛ cut off
Revolutions per minute
8
16
24
32
40
48
56
64
72
80

FIG. 193.

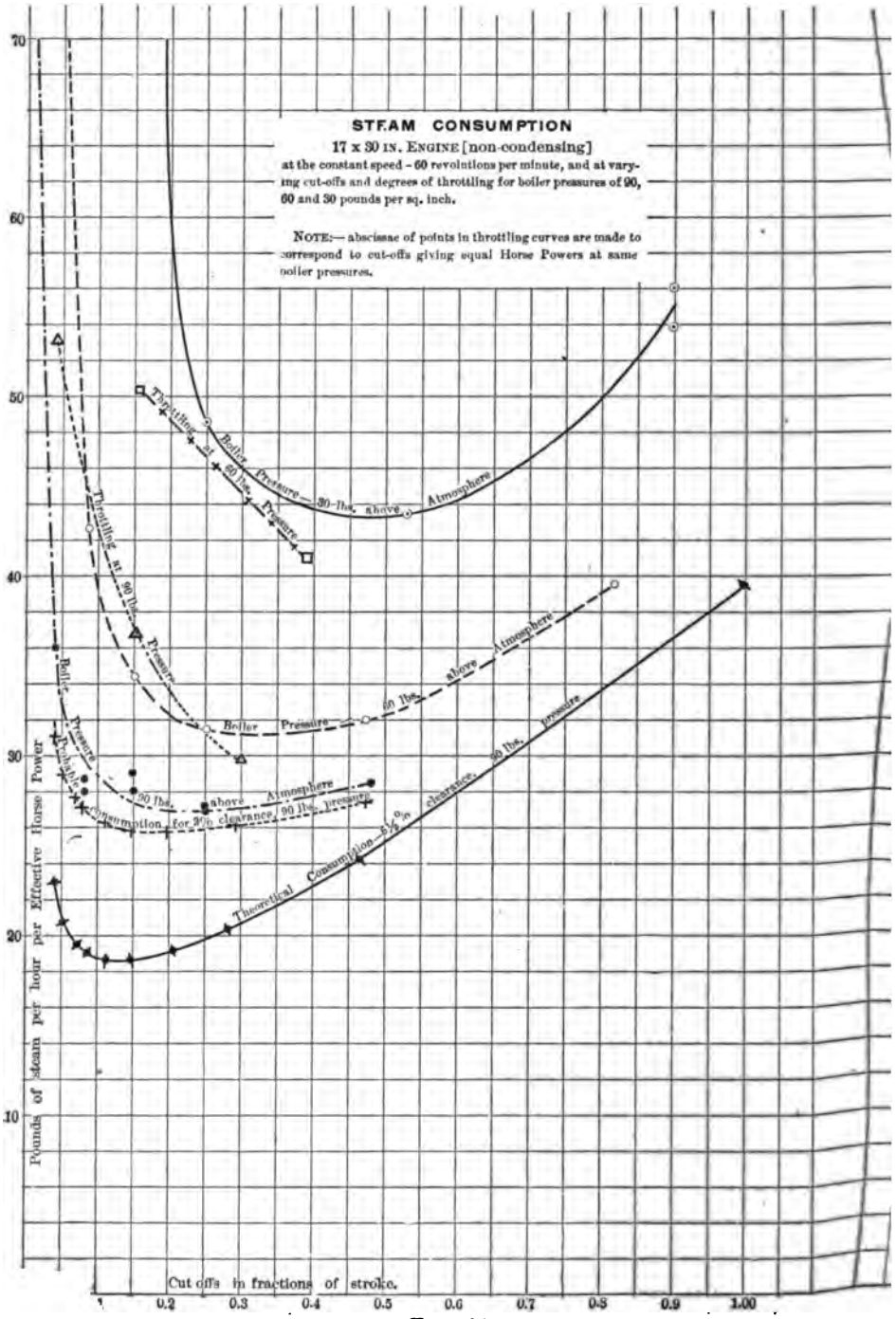
STEAM CONSUMPTION
17 x 30 IN. ENGINE [non-condensing]
at the constant speed - 60 revolutions per minute, and at varying cut-offs and degrees of throttling for boiler pressures of 90, 60 and 30 pounds per sq. inch.
NOTE:— abscissae of points in throttling curves are made to correspond to cut-offs giving equal Horse Powers at same boiler pressures.
Throttling at 30 lbs. Pressure
Boiler Pressure—30 lbs. above Atmosphere
Throttling at 60 lbs. Pressure
Boiler Pressure—60 lbs. above Atmosphere
Throttling at 90 lbs. Pressure
Boiler Pressure—90 lbs. above Atmosphere
Consumption for 3% clearance, 90 lbs. pressure
Theoretical Consumption—6% clearance, 90 lbs. pressure
Pounds of steam per hour per Effective Horse Power
Cut offs in fractions of stroke.
70
60
50
40
30
20
10
0.2
0.3
0.4
0.5
0.6
0.7
0.8
0.9
1.00

FIG. 194.

CARD No. 55.—Taken with defective indicator.

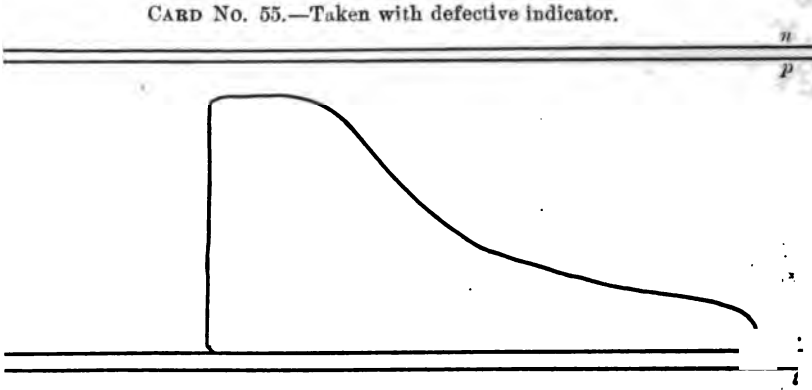

FIG. 195.

CARD No. 56.

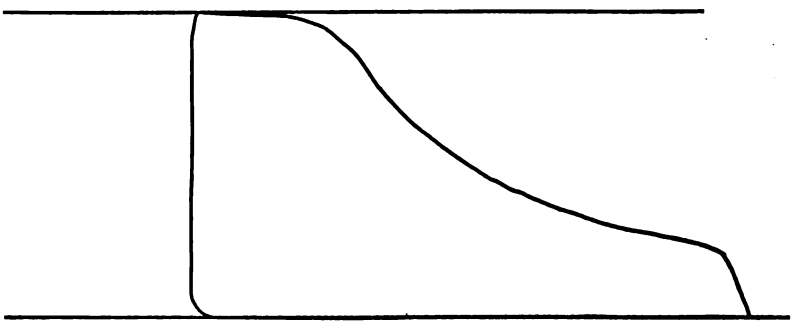

FIG. 196.

CARD No. 57.—Taken with dirty indicator.

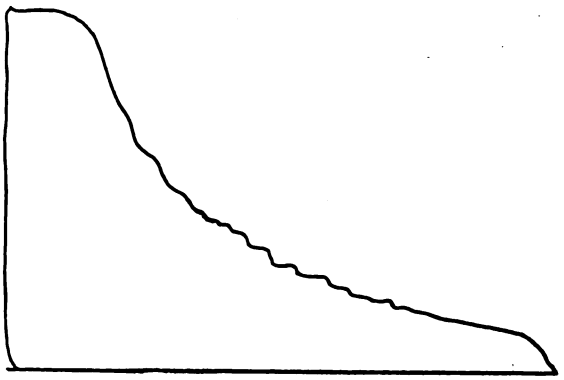

FIG. 197.

DISCUSSION.

Mr. A. R. Wolff.—I desire to record my deep admiration for the excellent character of the experimental work performed by Professors Denton and Jacobus, and the scrupulous care and profound intelligence with which they have worked up the data, and presented the conclusion, being cautious at the same time, like true investigators, not to generalize on the conclusions beyond the special range covered by the experiments. At the same time, knowing how quick many are to generalize on the basis of such experiments, beyond the authority of the experimenters themselves, I wish to point out significantly:

1. That the highest rate of revolution of engine covered by the experiments—87 per minute—is now currently classed as a moderate speed, and that it by no means follows that the increase of economy of [1] of water per H.P. per revolution (90 lbs. of steam, $\frac{1}{4}$ cut-off) will be secured for higher piston speeds, even if there be no loss by leakage of pistons, etc., at higher rotative speeds.

2. That there must actually be enormous leakages at higher rates of revolution, owing to wear and tear; for, notably in electric light work, the theoretical economy of the high-speed engines, allowing fair percentages for condensation, is far from being commercially realized, as the actual monthly records of fuel consumption show; while moderate-speed engines of the Corliss type, working with the same initial pressure and cut-off, actually secure a commercial economy approaching much more closely the theoretical economy (calculated), and far in excess of that attained by high-speed engines. This refers to actual daily practice, not to tests, as published in catalogues made at the builders' establishments, when the engines are in a condition they do not maintain in practice.

Mr. H. W. Spangler.—With reference to these tests, I have not had an opportunity to carefully read them over; but in glancing over them, I was struck by one thing in the published cards which are given. In the record of the test, Mr. Denton has said that the piston and valves were tight. You will find by looking at the cards that the expansion line is generally very much above a rectangular hyperbola. Now, among the majority of engineers it is assumed that if the expansion curve approximates closely to a rectangular hyperbola, the engine is doing about as well as could be expected of it. If you will look at the cards as printed, you will find that if the engine had been doing just what the rectangular

hyperbola shows, it would be doing much less than should have been expected of it. In a number of cases where the engines and valves were tight, I found that this often happens. Whether it is universal or not, I do not know. If it is so, then the rectangular hyperbola laid down on the card is not the perfection to which we should attempt to bring our engines, but some other line above that.

Prof. De Volson Wood.—I am not able at this time to assist in the discussion, but I wish to add a fact in regard to throttling. Two of our students went to view the water-works at Newark, at one of the stations, and they found that they were carrying a boiler pressure of over ninety pounds, and their indicated pressure was about sixty, the fall of pressure being secured by throttling. I requested them to experiment with it by lowering the boiler pressure and raising the pressure in the cylinder, leaving the throttling valve entirely open. They did so, measuring somewhat accurately the coal that was used before and the coal that was used after, and I was surprised at the amount of saving which they reported due to that change of condition. I expected considerable change, but it was larger than I expected.

Mr. C. S. Dutton.—In regard to the comparison in steam-engine economy, I just wish to say that I was informed by a steam-engine expert, a member of this Society, who has tested a great many engines, especially in the east, that the best result he had ever attained from a four-valve engine about this size was 26 pounds of water, and that was only in a single instance.

Prof. Denton.—May I ask Mr. Spangler to state his point again?

Mr. Spangler.—I said that, in looking over the cards, I find almost invariably on each of those cards that the expansion curve comes considerably above the rectangular hyperbola; that, if the rectangular hyperbola is what we should attempt to attain, this engine would be very much better than we ordinarily expected. But in many cards I have attained, where I have been reasonably sure that the piston and valves were tight, the expansion curve did come above a rectangular hyperbola. Therefore the rectangular hyperbola, if that be true, in most cases is no particular criterion of the perfection attained in the engine.

Prof. J. E. Denton.—Referring to Mr. Wolff's remarks, I regret that the higher limits of speed fell short of present practice. Higher speed would, however, deform the cards greatly, as the parts were not designed for greater speed than ninety revolutions.

I hope that Mr. Wolff will indicate how his conclusions regarding the relative consumption of high *vs.* low-speed engines was obtained, that is, whether by his own measurements or by reports of users.

While there is no doubt that throttling at full stroke, or $\frac{3}{4}$ cut-off, is less economical than to obtain equal power with shorter cut-off and less throttling, it should be noted that, with *equal measures of expansion, the greater the throttling with which a given* mean effective pressure *can be produced, the better the economy of steam.* See bottom of page 729.

Prof. Spangler's remarks induce me to emphasize the fact that the engine was undoubtedly perfectly tight, and therefore the testimony of the cards of the paper is to be added to his previous observation of the interesting fact that tight engines may give expansion lines above the Mariotte curve.

I am glad to have this confirmation of the phenomenon by so careful a worker in steam as Professor Spangler.

CCCL.

THE USE OF CRUDE PETROLEUM IN STEAM-BOILERS.

(*Supplementary Paper.*)

BY LEWIS F. LYNE, NEW YORK CITY.

(Member of the Society.)

SOON after reading my paper on "The Use of Kerosene Oil in Steam-Boilers,"* at the Philadelphia meeting in November, 1887 I purchased a barrel of crude petroleum, to see what it would do when compared with kerosene oil for the prevention of scale in steam-boilers. For this experiment I had the two new Root boilers of 100 H. P. each, alluded to in my former paper, and had them thoroughly cleaned, so that no dirt could be found anywhere inside of them. This was easily accomplished by a slight rinsing with a jet of water from a hose, for the reason that the kerosene oil had kept these boilers perfectly free from scale for several months previous to this time.

I began using one gallon of kerosene oil each week in No. 1 of these boilers, while a corresponding quantity of crude petroleum was put into the other boiler, No. 2. Both of these boilers had precisely an equal quantity of work to perform, and like conditions existed in both instances. At the expiration of one month I examined both boilers, and found that while No. 1, in which the kerosene oil was used, had no dirt or scale in it, there was considerable loose scale in the No. 2, using the crude petroleum. These scales were removed and the fine dirt washed out, when they were both closed up again. Four months afterward we removed about one bushel of hard, broken scales from the back headers and tubes of No 2, in which the crude petroleum was used, and some of these scales were stuck fast inside of the tubes. Inspections were made every month.

Nearly one day's labor was necessary to put this boiler in order, and I noticed that the grooving at the upper end of the glass water-

* Trans. A. S. M. E., Vol. IX., p. 247, No. CCLXXV.

gauge had reappeared, and the glass had been reduced in thickness, so that we had to insert a new tube. The corrosive action about the upper part of this boiler and on the safety-valve flanges had also reappeared. The other boiler, No. 1, in which kerosene oil had been used, was still clean, and we rinsed it out with clean water from a hose. All the hard scale was not removed from inside the tubes of No. 2 boiler, because we had insufficient time; so we closed and filled both boilers with water. Just after closing the blow-off cocks, one gallon of kerosene oil was put into each boiler. We continued to use one gallon of kerosene oil each week for the next month. When the boilers were again inspected, we found that the kerosene oil had removed all the scale that was left inside the tubes the month previous, and the mud drum was about half full of loose, soft scale. No. 1 boiler was still clean. During the last winter we have been using one gallon of kerosene oil every other day in each of these boilers, and they have run as long as six months at a time without washing, as the inside of the tubes was perfectly clean; monthly inspections made as usual, at which time these boilers were emptied and refilled. Every Saturday the water was blown down two gauges. We have several times tried crude petroleum alternately in each of these boilers until the contents of the barrel were all used, and each time with a like result; the corrosive action with the loose, hard scales appearing always when the crude petroleum was used, and disappearing while we used the kerosene oil. I was convinced that this result was due to the impurities in the crude petroleum, because in kerosene oil we find none of those foreign substances which would be likely to combine with the earthy matter in the water and form scales. At all events we know that by using the refined petroleum (kerosene oil) the scales disappear, the other conditions being alike in both cases. The tar and wax contained in crude petroleum do combine with the sediment in steam-boilers, and that paste is successful in preventing the water from reaching and protecting the plates. This is true particularly in shell boilers which have flat surfaces over the fire. I have known of several instances of this kind since preparing my former paper. A certain engineer who tried kerosene oil burned a spot directly over the furnace, and upon opening the boiler found several bushels of scale lying on the bottom of the boiler, and condemned the kerosene.

He was one of those individuals who seemed to believe that kerosene oil would not only loosen the scale, but also remove it in

some mysterious way, through the pores of the iron, as it were, as water imperceptibly disappears, in boiling, from an air-tight vessel. If a boiler is known to be quite dirty, the kerosene should not be put in more than three days before it is intended to wash the boiler.

This process should be repeated until the interior is almost free from scale. Some time ago an engineer tried kerosene oil in his boiler and in the course of a week complained to a friend of his that the kerosene made the boiler leak. An examination was advised and made, showing that near the back there was more scale than there was iron; or, in other words, the kerosene had caused the scale and iron to separate, the iron having corroded away to such an extent that a leak was inevitable. A patch was immediately put on, and a disaster was probably avoided through this revelation.

Another engineer opened his heater, and, without raising the safety-valve to permit the escape of gas arising from the kerosene oil which he had been using, he inserted a lighted torch, when the gas ignited and burned his arm and hand.

This is a precaution which ought always to be observed in all cases—viz., properly to ventilate boilers, heaters, and tanks of all descriptions before entering them with lighted lamps and torches. While these gases are not likely to cause an explosion, they burn quite rapidly and should be promptly removed without giving opportunity for an accident. The accumulation of gas is not confined to the use of kerosene oil for the prevention of scale in steam-boilers, but is also found in flour-mills, confectioners', conduits for electric wires, brewers' vats, etc. So, with common-sense precautions, we run no extra risk in using kerosene oil in steam-boilers. I was told a short time ago that kerosene oil was a bad thing to put into a boiler because "*it eats the iron*"—a very remarkable statement, to be sure. In support of his assertion this engineer said: "If you wish to clean a rusty bolt or loosen a corroded nut you put kerosene oil on it, do you not?" I answered "Yes." "Well, it eats off the rust; and that would leave holes in some boilers."

I admitted that it would, and that it would be an excellent thing for the safety of the community if kerosene were used only once a year in some boilers, if only to reveal their weak places. I added that we put kerosene oil into boilers to take off the scale and to separate the rust from the iron; and when the rust

and scale are thus separated they must be removed from the boiler at once, or the plates may be injured.

There are a great many engineers who use kerosene oil in steam-boilers and are well satisfied; and some, having tried crude petroleum without success, are now using kerosene oil to their entire satisfaction.

CCCLI.

TRACTIVE FORCE OF LEATHER BELTS ON PULLEY FACES.

BY SCOTT A. SMITH, PROVIDENCE, R. I.

(Member of the Society.)

It is of the highest value to users of leather belts to know the exact conditions which give the greatest tractive force of belts on pulley faces; in immediate connection with this, it is essential to have knowledge of what constitutes the best leather belting.

It is the opinion of the writer that the best belts are made from all oak-tanned leather, and curried with the use of cod oil and tallow, all to be of superior quality. Such belts have continued in use thirty to forty years, when used as simple driving-belts, driving a proper amount of power, and having had suitable care.

In the best methods of currying, only a very small quantity of the stearine of tallow enters into the leather; the oleine of the tallow and cod oil, during a period of four weeks employed in a suitable currying process, oxidize under the influence of heat, moisture, and much hand and machine labor intelligently used, and become, or partake of the nature of, a gum or varnish, most intimately united with fibres which interlace in all directions.

Such leather contains no free oil, which would, if of animal or vegetable origin, have a natural tendency to generate free acid injurious to the fibres. Belt leather thus made has a supple character, with a little elasticity and compressibility which eminently fits it for tractive use on a pulley face.

When a new belt is put to use with the flesh side to the pulley, there is on it a certain quantity of stearine from the tallow (rubbed down to give smoothness to that side); this grease acts, or aids, by increasing the surface of contact, to give an extra tractive quality to the leather. If the grain side is run to the pulley face, then, in the first use of the belt, there is more tendency to slip, owing to the absence of grease on the surface, and also to the fact that the grain is hard; and in the case of small diameters of pulleys,

the belt face is wrinkled, thus it is less in a condition to be brought into intimate contact, under pressure, with the pulley face, over its whole contact surface, than is the softer flesh side. The stearine on the surface of the flesh side, and the softness of its face, operate to exclude air from between the two surfaces, thus affording the benefit of atmospheric pressure, the strongest element in its tractive force, to hold the belt to the pulley face. In addition, when the two surfaces of leather and iron come together, on one or both of which there is a semi-fluid to interpenetrate into the pores of the two faces (providing there is a minimum of this material, or only sufficient for this interpenetration) then this material becomes an impediment to the slipping of the belt to the extent of the cohesion of its particles, to which is to be added much of its power of adhesion to, or affinity for, the iron and leather.

This statement, in relation to the action of stearine on the flesh side of leather, and the running of that side to a pulley face, is not given in the sense of an approval of either the one or the other, but to illustrate by a familiar fact. Stearine has no legitimate place on or in leather; also the flesh side should not be run to the pulley face, for the reason that the wear from contact with the pulley should come on the grain side, as that surface of the belt is much weaker in its tensile strength than the flesh side; also, as the grain is hard, it is more enduring for the wear of attrition; further, if the grain is actually worn off, then the belt may not suffer, in its integrity, from a ready tendency of the hard grain side to crack.

The most intimate contact of a belt with a pulley comes, first, in the smoothness of a pulley face, including freedom from ridges and hollows left by turning-tools. Second: in the smoothness of the surface and evenness in the texture, or body, of a belt. Third: in having the crown of the driving and receiving pulleys exactly alike; as nearly so as is practicable in a commercial sense. Fourth: in having the crown of pulleys not over $\frac{1}{8}''$ for a 24″ face, that is to say, that the pulley is not to be over $\frac{1}{4}''$ larger in diameter in its center. Fifth: in having the crown other than two planes meeting at the center. Sixth: the use of any material on, or in, a belt, in addition to those necessarily used in the currying process, to keep them pliable or increase their tractive quality, should wholly depend upon the exigencies arising in the use of belts; and the use of such material may justly be governed by this idea, that it is safer to sin in non-use than in over-use. Seventh: with reference to the lacing of belts, it seems to be a good practice

to cut the ends to a convex shape by using a former, so that there may be a nearly uniform stress on the lacing through the center as compared with the edges. For a belt 10″ wide, the center of each end should recede $\frac{1}{16}$″.

An impediment to the just use of leather belting, in minor cases, comes from the fact that many manufacturers of machinery will adhere to the custom of putting too small receiving pulleys on to their machines, to indicate to the purchaser that little power is required to operate them. I have a feeling of pride in having the acquaintance of an eminently practical man who takes off a pulley 6″ diameter by 4″ face on a circular-saw arbor, and substitutes a pulley 9″ diameter by 6″ face.

A few words as to hemlock-tanned leather, or leather tanned by the use of half hemlock and half oak bark. I do not consider them as worthy of much consideration, as many makers of that class of belting stock have been obliged to abandon its manufacture during the past forty years. It is a less costly and less enduring product. It goes without saying that a well-made "hemlock" belt is better than a poorly made "oak" belt; duly considering all the processes involved in the making of each.

I would maintain that a skilled maker of oak-tanned belting can meet any and all legitimate requirements, whatever they may be. Some uses of a belt demand that it shall be much softer than for other purposes; some that it shall be elastic; other cases need a very rigid or non-elastic belt. For quarter-twist belts, owing to the firmness of oak-tanned leather, the belts should be specially shaped by the maker for that use, both in the length of the belt and at the ends.

Referring again to the subject of oils on leather: mineral oils always act to negative oxidation of the oils in the currying process; hence they are detrimental for that use. If added after the currying process is completed, then they tend to undo the currying by softening the oxidized oils.

A question not to be ignored relates to the action of air and other influences in keeping belts from full contact with the top side of a receiving pulley, when belts are run at very high speeds; this is caused by the massing of air at this point; by excessive crown in pulleys, giving much convexity to the belt to hold air on or in its concave side; by the rigid character of many belts; and by centrifugal force.

Much leather belting is made, which, when finished, has a very

rigid character. It has gone into the hands of users in that condition for these reasons: First, because a desire has grown with some users to have belts extremely rigid against stretching—apparently forgetting that such rigidity ensures that a belt shall have a comparatively short life. Second, to make a belt very supple and very uniform in its body and over its whole surface necessitates expensive methods in currying. The continual demand for lower and lower prices has induced the leaving out of that amount of careful hand labor which always gives suppleness to leather, if otherwise well qualified; and in place of it has come a "machine" surface finish, which, to the eye, passes for the genuine article. This suppleness—sometimes called mellowness—gives to leather due pliability, and such belts run satisfactorily at high speeds.

While the "suppleness" of belt leather has been denominated "mellowness" it should be stated that there is a resistance to flexion, in the best leather, due to its components of fibres interlaced in all directions, and a body of flexible gum, which while it readily bends, yet it as readily returns to its initial shape; but the best is fully appreciated only through experience.

Rigid belts are sometimes made pliable by saturation with "belt oil," but the inevitable result, in time, is a disorganized belt; slipping will come; and the addition of more oil only results in its acting as a lubricant, by piling up on the surface.

There is some doubt in my mind as to the desirability of perforating belts, or the drilling of pulley faces, to overcome the difficulty mentioned, so far as it comes from the air, which is not so much a real difficulty when properly made belts are used as it is with rigid belts.

Free oils added to curried leather give "momentary" added strength by filling all the pores to distension, thus locking fibres to place; and by softening the fibres and allowing a strain—for instance, at lace holes—to be distributed over very many fibres.

As friction is due—largely—to the unevenness of two surfaces in contact under motion, and as the best tractive quality of belts comes from the evenness and smoothness of the two surfaces of belt and pulley face, it easily follows, from what I have said, that the value of the tractive force of a belt on a pulley face is due, first, to atmospheric pressure; second, to the tractive adhesion of the leather fibres and the oxidized oil of the currying process. *

* For a fuller understanding of all matters connected with leather belts, I refer you to an article written by me, entitled "Leather: Reasons why Uncur-

DISCUSSION.

Mr. A. F. Nagle.—I have no reason to doubt the correctness of all Mr. Smith says on the subject of belting, so far as relates to tanning, oiling, and greasing; but when Mr. Smith refers to the effect of the atmosphere as "keeping the belt from full contact with the pulley," and in the concluding paragraph attributes the best traction force of a belt to atmospheric pressure, I am inclined to ask Mr. Smith to prove his statements. Both of these assertions are very old and common, and I think they ought not to be repeated in our Society unless there is at least some evidence for their soundness. My own study of the subject leads me to believe that this theory is all moonshine; that the well-known laws governing friction and centrifugal force explain all the phenomena of the attractive power of belts, without resorting to any air theory; but if Mr. Smith has any facts, old or new, bearing on this subject, I shall certainly be glad to hear them. If there is anything approximating to a vacuum existing between belt and pulley, the effect would be a *constant pressure* in addition to belt tension. If we refer to Mr. Towne's experiments, quoted page 230 by Cooper on "Belting," we shall observe that the *ratio* between weights on each side of pulley is practically uniform, or a *constant*, which it would not be if the atmosphere were a factor in the case.

Mr. John H. Cooper.—Mr. Smith has referred to some of the vital points of that much used and much abused member of power-transmitting machinery, to which I wish to add a few remarks. In every discussion of belt-driving we must distinguish between friction and adhesion. Friction is somewhat independent of the amount of surface, while adhesion is much according to the extent of it and to the nature of the adhesive. It is just as necessary for belts to have a proper adhesive power to make them hold, as for the moving parts of machines to have proper lubricants to let them run. Of course, there is a happy medium between free slipping and fast sticking; neither extreme is permissible with belting. But slipping is to be preferred to that degree of adhesion

---

ried Leather has Little Strength, and the Cause of the Great Strength of Curried Leather," published in "Power-Steam," in July, 1887. Also to a paper read at Boston, in October, 1888, before the N. E. Cotton Manufacturers Association—"Leather Belts: How to Determine the Relative Value of Different Makes."

S.

which would injure or destroy the face of the belt; and the elasticity and the slipping of belts, we well know, are trusty safeguards against injury and breakdowns. Pulley diameters should be increased, which will give greater belt speed, permit the use of narrower belts, and reduce journal friction. All these are in conformity with best practice. The narrower belts are usually thinner, and are therefore more pliable. By these means that part of the system which acts by the uncertain element of adhesion is reduced to a minimum.

In reference to the assertion of the favorable influence of atmospheric pressure on belt adhesion, it may be said that the simple experiment of a wetted disc of leather with a knotted string in its center, used by wanton boys and called by them a "sucker," for lifting loose bricks and the like from the sidewalk, may be used to explain away this assertion. When the disc is pressed upon any plain wetted surface, the effort to lift the disc by the string will, indeed, be measured by its inch area times the atmospheric unit, and will be considerable; but belts do not act in that way. The slightest force of the hand will move this disc along on the surface, and by raising its edge, as a belt leaves its pulley, it can be easily stripped away.

The effect of pulley perforation on belt adhesion with high speeds was found by accident greatly to increase the grip of the belt, and prevent also its squealing. The holes permitted the escape of the entrained air, which did not have time to reach the edges of the pulleys. As centrifugal force presses the belt from the pulley, it is fair to assume that the entrained air will tend in the some direction, and one might naturally conclude that it would be best to perforate the belt instead of the pulley. This has been effectively done by Mr. Schieren, of New York, the perforations being such as to cut less of the belt section away than is usually done for lacing.

Mr. Smith's seven stated conditions of pulleys and belts lie in the line of good practice, but to the seventh may be added a proper method of lacing, which has something to do with a permanent joining. The stronger part of the lacings should be at the edges of the belt, the ends of the lacings terminating near the middle of the same. Punching belts for the lacing reduces the strength about one-third, according to the experiments of Mr. Towne; and care should be taken with this part so as to reduce the fibre of the belt by the least amount. If there is any part of

a power-transmission that shows the unwisdom of the buyer, it is that of purchasing three times the quantity of leather needed for it, often of poor quality, and then sacrificing two-thirds of its effective strength by the punch and by ill methods of lacing.

If the maxim be true, "Nothing is stronger than the strength of its weakest part," it probably applies to belting. There is, however, a justification for this liberality. To overcome starting frictions, to have ample surface when the adhesive lessens its grip or fails, to be ready for extra service when required, to ensure against weak stock in the make-up of the belt, but most of all to give a liberal factor of efficiency, which is wise economy. It is said there is one thing in mechanics that will never be settled; and that is how properly to lace a belt. We much need a fair practical foot-pound unit of driving surface for belts. This has not yet been solved.

Prof. Denton.—I think that Mr. Smith's paper is an exceedingly valuable one, in bringing out all these fine points about the action of oil, etc., which I think have not received much attention before, and which are certainly very instructive to me, especially when it calls forth a discussion from the veteran writer on belting whom we have here this morning.

This thought occurs to me in regard to that air matter; is not Mr. Smith's position regarding the superior influence of the atmosphere justified by this little idea? If there is a belt running around a pulley, it is known that the tension of lacing of a belt hardly ever exceeds 45 pounds per square inch of width; I think it is generally less than that. That is a part of practical belting, I think, we need observation upon. What is the average tension of belts? But that is a pretty high tension for a single belt. We have 45 pounds on one side, and then the force going and coming would add together and give us 90 pounds. Now, the pressure per square inch on the belt at any point around the pulley would be 90 pounds divided by the diameter. Take any reasonable diameter, say ten inches. This gives 9 pounds per square inch, which is less than the atmospheric pressure,—14.7 pounds per square inch. Now, that is a fairly small pulley; and until we get to a very small pulley, say 4 inches, which would give us 22 pounds, the tension pressure would not exceed the atmospheric pressure.

Of course, when there is no practical slip, the sum of these tensions is always the same: as much as we release on one side we

gain on the other. With reasonable slip the sum of the tens
never alters. I take it that this showing justifies Mr. Smi
assertion that the atmosphere is the principal cause of the adhe
force of belts, *provided* the air is removed from beneath the l
I do not believe, however, that the air is absent between the
and pulley.

Mr. F. H. Ball.—Just one thought suggests itself to me in
nection with this matter: whether or not the air performs any
portant function, or has much to do with the action of the bel
the pulley. It occurred to me that if the air was to be excl
from between the belt and the wheel, the better method woul
to perforate the belt rather than to drill the wheel, for the re
that the centrifugal force of the air would naturally make a
rent of air through those holes in the wheel, throwing the air
into the belt; whereas, if the holes were through the belt,
same centrifugal force would tend to throw the air out that
lying between the belt and the wheel.

Mr. Cooper.—I will make one remark to show the line of rea
ing I have gone through. If we take two surface plates and
one on the other, we will find that the upper plate will slide arc
very freely; yet if you attempt to pull it away at right angl
the face, it will lift the lower one. On the other hand, if
would take those two surface plates and start them with all th
out, then we will meet with a strong resistance against sliding,
have the atmospheric pressure the same; so it would not see
require flexibility and an air space formed in the center of
sucker, which could hardly happen in belt running, because
belt is laid over the pulley, and must catch the air that is unde
—the air which is confined by some kind of force, we cannot
what. When the belt comes upon the pulley, as when one su
plate comes upon the other surface plate, there is no resist
whatever to sliding; it is perfectly free. It will slip around
as freely as this paper will on this surface which I hold in
hand. Now, we know that the resistance of the belt must
parallel to its pull to be of service for power, therefore the at
pheric pressure does not seem to have anything whatever t
with making the belt stick to its work.

Prof. Denton.—I think the surface plate is an exceptional
—that the air does not enter. I agree with Mr. Cooper on
point.

Mr. C. S. Dutton.—Whatever reason there may be for it, whe

it is centrifugal force or the carrying of the air under the pulley, it is a certain fact, that I have seen myself, that in some fast running belting there is a film of air between the pulley and the belt. I remember the case of a belt running 5,000 feet a minute over a 30-inch pulley—a double belt. It was a poor piece of engineering to run such a belt over a small pulley. But in point of fact, by holding a candle on one side, you could see the light between the belt and the pulley, nearly or quite all the way around it, and the transmitting effect there was very poor. It was put on to replace a lighter belt running at a lower speed, which gave a much better effect.

Mr. E. F. C. Davis.—It occurs to me, while listening to this discussion, that Mr. Cooper's illustration would lead one to think that the entire exclusion of the air *is* necessary to make the belt effective at all. With the surface plate illustration you slide one on the other, so that you exclude the air, and you get the very adhesion you do between the belt and the pulley. It does not seem to follow that you would entrap the air between belt and pulley, but that you would push the air away. Another very common illustration to anyone who has dabbled at all in photography, and attempted to strip the American films: You take a piece of wet paper and lay it on a piece of glass under water. As long as there is a layer of water between the paper and the glass, the paper will slip about easily; but if the paper is brought into intimate contact with the glass, by excluding the water, you cannot slide the paper on the glass without destroying the paper. I think a belt gets its adhesion in the same way. As long as there is a film of air between the belt and the pulley, it would naturally slip, but the belt lays itself on the pulley in a way which gets the surfaces in contact without this lubricating medium.

The President (*Mr. H. R. Towne*).—There have been some very valuable papers on the subject of belting published in the Transactions of the Society within the last five years; notably those by Mr. Wilfred Lewis* and Prof. Lanza.†

The allusion made to my own experiments prompts me to say that they were made with three sets of belts,—one new, one old, and one medium. I think an examination of the record there will show that the question of adhesion due to interposition of air, or its exclusion, is not a material one. The record of those tests will be found in the "Franklin Institute Journal" for February, 1367.

* Trans. A. S. M. E. Vol. VII., p. 549, No. CCXIII.

† Trans. A. S. M. E. Vol. VII., p. 347, No. CCII.

Mr. Scott A. Smith.—With reference to this air-pressure matter, I have gone over that very thoroughly indeed in various ways, and have considered the sucker, and surfacing plates under different conditions, and plates of glass, and the use of iron planes in planing wood. To have illustrated these would have involved bringing some apparatus here and making a pretty long story of the thing. I was of the opinion that it was so well accepted that atmospheric pressure was an element in the tractive force of belts, that I did not think it worth while to carry on the subject in that way.

Prof. Denton.—I would like to ask Mr. Smith if he will not add to his paper some account of these experiments he speaks of.

Mr. Scott A. Smith.—Perhaps I have not elaborated those sufficiently, but I will do what you suggest if I see my way to doing it in a comprehensive manner.

ADDED AFTER ADJOURNMENT.

Mr. Scott A. Smith.—With reference to atmospheric pressure as an aid in the tractive force of leather belts, I have been over the subject very thoroughly, including long and patient observation of the working of belts under varying conditions of actual use.

It should be understood that pressure due to a complete vacuum, as generally understood, is not claimed.

In going to other things to gather proofs in favor of a particular belief, I am aware that there is great liability of not fully understanding each case, and thus misapplying facts.

I here introduce accepted definitions of friction and adhesion, for purposes which will appear further on. "When two surfaces are pressed together, it is found that one cannot be moved along and relatively to the other without the exertion of some definite effort. The resistance, to balance which this effort has to be exerted, is called friction between the surfaces." "In overcoming the friction, the parts which come in contact are compressed, the projecting parts bent over, or perhaps torn away, broken off, etc. Friction is therefore dependent, not only upon the roughness or smoothness of the surface, but also upon the nature of the materials of which bodies are composed." "But we must not confound friction with adhesion; *i.e.*, with that union of bodies which takes place when the bodies come in contact in very many points without the existence of any pressure between them. The adhesion increases with the surface in contact, and is independent of the pressure, while for friction the reverse is true. When the pressures

are small, the adhesion appears to be very great compared with the friction, but if the pressures are great it becomes but a very small portion of the friction, and can generally be neglected. Unguents, generally, increase the adhesion, since they produce a greater number of points of contact."

The following illustrations are valuable as suggestions to aid in understanding the case under consideration:

1st. The careful pushing of one surface plate over another, and the lifting of the lower one by the upper, is, certainly, a proof of atmospheric aid in the case.

2d. When a carpenter uses an iron plane which is both level and smooth, and finds that his labors are largely increased by what he calls suction on the plane, that is good evidence of easy exclusion of air, and consequent atmospheric pressure.

3d. In the case of the boy's leather sucker on the stone, air is excluded. To compare exactly the action of a belt with the boy's sucker, it would be necessary that the belt should be so saturated with oil, and be made so very pliable, that it would in no sense act as a suitable belt.

4th. When the house-fly puts his feet upon a pane of glass, and the enclosing claws find no surface into which they can interlock, then from the continued enclosing of the claws there exudes from two lobes, under the claws on each foot, an adhesive substance, in globules, which adheres to the glass, shutting out air at the points of contact; then the fly has atmospheric aid in addition to adhesion (a reverse movement of the claws throws the lobes free).

5th. By putting a liquid into a vessel, air is excluded; putting a liquid upon a flat surface excludes air. Putting any substance upon another excludes air at the points of contact. Intimate contact between two surfaces acts to exclude air. "Two substances cannot occupy the same space at the same time."

It may be said that the best working of leath[illegible]s, th[illegible] spect to tractive force, has been carried out in m[illegible]y [illegible] but [illegible] explicit, clear statement has apparently [illegible] what should be sought for as the best con[illegible] greatest tractive force of a belt. The exper[illegible] of [illegible] belting has taught them that they get the b[illegible] when calling for the full power of belts—fr[illegible] with smooth surfaces and even textur[illegible], [illegible] faces; hence, the idea of "friction," [illegible] in [illegible] must be largely excluded. It is very [illegible]y k[illegible]

ciated that there is a material benefit from the presence on the surface of belts and pulley faces of a suitable "unguent" *in very limited quantity*, as explained in my paper; which I claim fills the pores of each so that when the two surfaces come together there is a practical union, and a shutting out of air, with consequent atmospheric aid.

The practical effect—value—of a belief in atmospheric aid is to induce the running of belts very or comparatively slack, thus avoiding unnecessary stress on bearings, and maintaining the integrity of belts. My observation of the every-day use of belting, particularly during the last ten years, is in full confirmation of this, and, per contra, I have seen that a total disregard of this belief has resulted in the destruction (throwing out) of belts in a few weeks or a few months, when they might have served well on towards the full life of the best-made belts, which, as I have stated, is from thirty to forty years.

Atmospheric aid is obtained in the easiest manner as follows (read in connection with paragraph commencing "The most intimate contact" etc.):

1st. By the use of the best-made belting, as explained.

2d. By the use of belts made without rivets—rivets, generally speaking, are only a make-shift to stand as aids to poor, incomplete work—poor cement—at the laps; or to invite the abuse of belts in use—as, for instance, in the over-tightening of belts when slipping occurs, owing to the presence of rivets, on pulleys of very small diameter.

3d. By the use of very low crowns on pulleys, as explained.

4th. By keeping belts clean and free from oil.

5th. By the use of a suitable "unguent," as explained.

6th. By running the hair-grain-smooth side to pulley face, which will eventually (not at first) best exclude air.

To meet Professor Denton's request, I give an account of an experiment, so called. I have had in use a 4" single belt driving off from a 10" pulley into a 10" pulley, at an angle of 80° from the horizontal, with the pull on the top side. It was, for "experimental" purposes, purposely put on very loose: it measures 3½" more, in length, than the distance around the pulleys, which have flat faces. One use to which this belt is put is to elevate 500 lbs. 50' high in one minute. Speed of driving pulley 150 R. P. M. Distance from centre to centre of shafts, 5'. The belt does this work in a perfectly satisfactory manner; it has not been shortened or re-

laced since putting on, two years since. The faces of both belt and pulley are kept in such clean condition as to ensure intimate contact; and, as nothing of an adhesive, sticky nature is used, the belt leaves the pulley faces with perfect freedom. In a recent trial the pulley faces were thoroughly cleaned, and then carefully washed with naphtha; the belt was thoroughly scraped, and rubbed with clean cotton waste; nothing further was done to either. The condition of pulley faces was that the pores were filled; the condition of belt was that it was free from oil, but had its pores filled with a suitable "unguent," sufficient to exclude air on contact with pulley faces. While the slackness of this belt is excessive, in view of its being a nearly vertical belt, yet even in a succession of damp days it gives no real trouble.

Adhesion, as explained, and atmospheric pressure, cannot be dissociated one from the other; the two work harmoniously together. Thus, I maintain that the chief thing to be sought for in belt traction is aid from atmospheric pressure, as indicated.

NOTE.—As these remarks are intended to have a wholly practical bearing, I would say that some exigencies in the use of belts involve their rapid destruction; hence a "cheap belt" may result in giving as great (or greater) economy as an expensive one; also there are some conditions (dampness—steam—oil) in the use of belts which involve the necessity for their being riveted. A suitable crown is usually necessary on pulleys, particularly where the full power of belts is used.

CCCLII.

AN ERROR IN THE ENCYCLOPÆDIA BRITANNICA.

BY J. BURKITT WEBB, HOBOKEN, N. J.
(Member of the Society.)

In the article on Hydromechanics by Professors A. G. Greenhill and W. C. Unwin, section 150 (page 514), on the "*Reaction of a Jet Issuing from a Vessel*," a statement is made which would, if true, lead to most remarkable results, enabling us, indeed, to determine the absolute direction and velocity of the earth's motion in space by a simple mechanical method.

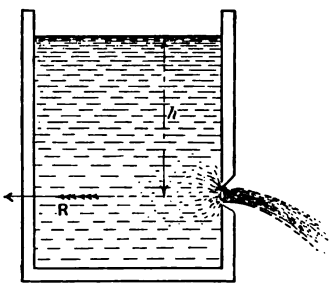

Fig. 153.

The first part of Section 150 runs as follows: "Suppose a vessel filled with water, having an orifice of area ω, from which water issues horizontally with a velocity $v = \sqrt{2gh}$. The volume discharged per second, neglecting contraction, $= \omega v$. The momentum generated per second in a horizontal direction $= \frac{G}{g}\omega v^2$; and this is equal to the force producing the change of momentum.

Hence the horizontal force or reaction R, acting on the side of the vessel opposite to the orifice, and equal and opposite to the force producing the momentum, is—

$$R = \frac{G}{g}\omega v^2 = 2G\omega h;$$

this is the weight of a column of water the section of which is the area of the orifice, and the height is twice the head.

If the vessel moves in a direction opposite to that of the jet with the velocity u, the absolute velocity of the water leaving the vessel is $v - u$. The momentum generated per second is $\frac{G}{g}\omega v(v - u) = R$."

What is said with reference to the stationary vessel is mainly correct, but the last paragraph contains remarkable and contradictory assumptions, for while the velocity, u, of the whole apparatus is not supposed to alter the issuing velocity, v, it is supposed to change the reaction, R, of the issuing water. Or, to put the contradiction in another way, it is held that while in a *stationary* vessel R depends on v alone, in a *moving* one it depends on $v \mp u$. Now a vessel is stationary with respect to all objects moving at the same speed in the same direction as it moves, and it is moving with respect to all others, so that stationary and moving are terms referring to the relation between the vessel and exterior objects, while the reaction is an interior relation between the vessel and the issuing water, and therefore cannot be affected by u.

The absurdity of the thing may be made clearer by considering that, were the formula given for R in the last paragraph correct, we could, by experimenting upon the reaction of a jet which could be directed toward all points in space, find directions of maximum and minimum reaction, the former of which must be the direction of the absolute motion of the vessel in space, for in that case we should have

$$R = \frac{G}{g}\,\omega v\,(v + u),$$

and with the jet turned opposite to the motion in space,

$$R = \frac{G}{g}\,\omega v\,(v - u).$$

By measuring v also we should be able to arrive at the value of u.

Having experimented upon the jet in a sufficient number of places, we could deduce therefrom the absolute motion of the earth in space, which is an absurdity in itself; at least we can form no definite conception of such a motion, nor of any fixed point in space to reckon such a motion from.

APPENDIX.*

A description of the apparatus required and the method of using it may make clearer the exact nature of the experiment proposed.

In Fig. 202 a is a vertical pipe supporting the apparatus and

* Added since the meeting.

supplying it with a constant quantity, Q, of water per second from a steam pump. b is a horizontal graduated disc fixed to the top of a. The pipe a is terminated with a water-tight joint at c, which allows the whole upper part of the instrument to be revolved about a vertical axis, and d is an index by which its position may be read upon the graduated disc. e is the support for the upper parts; it contains the joint at c, and is fast to the revolving part of it; it has also a nipple to receive the hose-connection f, a guide-ring h, and suitable sockets for the knife edges of the balance kj. The bent pipe gl constitutes the "vessel," with the orifice at l for the escape of the jet; this vessel is connected with the nipple by a flexible joint f, through which it is supplied with water, and passes loosely through the guide-ring h. It has two knife edges for the reception of two links k, connecting it with the bent-lever balance, so that the reaction R of the jet may be weighed by means of the weights at j. m is a counterpoise to adjust the balance.

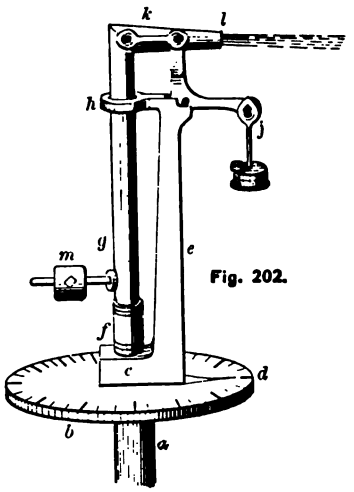

Fig. 202.

Suppose now that this apparatus is set up upon a steamboat, and the steam pump connected so that either the same water can be used over and over, or that it can be supplied from outside the boat, and let the following experiments be made:—

While the boat is in the dock let the jet be started, and its reaction R, as defined in the second paragraph of Section 150, be weighed with the balance; also let the quantity Q discharged be measured or weighed, and let v be calculated by means of the formula $R = v.QG \div g$, or $v = Rg \div QG$. Now if the apparatus be protected from the wind, and the pressure at the steam pump be maintained constant, the jet will issue always with this constant velocity v, whether the boat is at rest or moving uniformly through the water.

The apparatus is now ready for an experiment to test the formula, $R = \omega v\,(v - u)\,G \div g$, in the third or "criticised" paragraph. There is nothing in the principles of mechanics, in the section itself, or in common usage, to determine the body with

reference to which u is to be measured; let it be taken, however, as a velocity with respect to the earth, and the reference point changed later if necessary. v throughout the section is evidently with respect to the vessel, and R has been defined as the "reaction acting on the side of the vessel opposite to the orifice." G is the weight per cubic foot of water, and g the acceleration of gravity = 32 +.

Let, then, the boat proceed to cross the river from its dock at A, Fig. 203, to B. During the passage let R be weighed with the index pointing successively to all parts of the graduated circle; in some one of these positions the vessel g "moves in a direction opposite to that of the jet with a velocity u," and in the opposite position it does so with a velocity $= -u$, while its velocity opposite to the jet for intermediate positions is $u \cos \theta$, θ being the angle between the first position referred to and any other position, or the supplement of the angle between u and v. The vessel g now fulfils the conditions of the "criticised" paragraph, and the formula of that paragraph should apply if it is correct.

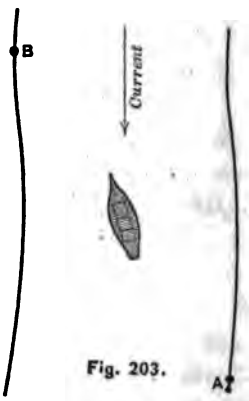

Fig. 203.

Now v and Q have been determined once for all by the preliminary experiment, and weighings have been made of R, so that in the formula $R = \omega v\,(v - u)\,G \div g = Q\,(v - u)\,G \div g$ everything is known but u, which may therefore be calculated both from this formula and from the generalized form thereof, $R = Q\,(v - u \cos \theta)\,G - g$. According to the formula, also, R will be a minimum when the boat moves opposite to the jet, and therefore the direction of u can be determined.

This is a strictly logical deduction from the statement in the Encyclopædia, if u is intended to be with reference to the earth; but it may be that u should be taken with reference to some point in space. In this case an extra joint would be needed in the instrument to allow of the jet being pointed in all directions above and below the horizon, and the balance would need modifications to enable R to be weighed in all positions of the jet. If the formula is correct for a velocity u in space, then the value of R depends on the direction in which the jet is pointed, and it will have maximum and minimum values, as before explained, from which the value and direction of u could be found.

Now it must be evident that the formula could not be true for both the above cases at once, and that therefore, if it be true at all, there must be some one definite body in space from which u is to be measured, otherwise R would have all sorts of values according to the choice of a reference point for u; and it was for this reason—that is, to give the formula the best chance possible—that I proposed to apply it to determination of the earth's motion in space. Although fixed directions in space are in harmony with the laws of mechanics, fixed points are inconceivable; if such a point were in existence, the criticised formula might be less unreasonable.

The following seems to me a better way of explaining the subject:

Reaction of a Jet.—If a jet of water issues with the velocity v and cross-section ω from a vessel, the volume discharged per second is $Q = \omega v$. The momentum generated per second $= (QG \div g)\, v = \omega v^2\, G \div g$, which is equal to the force producing it.

The reaction R, equal and opposite to this force, is therefore

$$R = Q\frac{G}{g}, v = \frac{G}{g}\,\omega v^2,$$

which is true also for water flowing into a vessel, in which case Q and v are both minus. The line of action of R is the axis of the jet, and its direction is always that of minus v. If the flow is not steady, Q and v, and therefore R, are variable, and this must be the case when there is but one jet, as in Figs. 165 and 166. When the vessel is moving uniformly, the expression for R is the same as when it is at rest.

The total reaction P for more than one jet is the resultant of the individual reactions.

"*Jet Propeller.*—If the vessel move with a velocity V, in the direction of a reaction, the latter becomes an effort performing work to propel the vessel. Vessels have been thus propelled continuously by jets directed sternward and supplied by water entering the ship from without. The supply water constitutes a jet flowing into the vessel with a velocity equal and opposite to that of the vessel itself, and having therefore the reaction $R_2 = (-QG \div g) \times -V = Q\,VG \div g$ in the direction $-V$, which is sternwards, and therefore a resistance. Subtracting the resistance R_2 from the effort R_1, there results for the propelling force

$$P = R_1 - R_2 = Qv\frac{G}{g} - Q\,V\frac{G}{g} = Q\frac{G}{g}(v - V),$$

etc., etc."

Here P has the same meaning as in the Encyclopædia, namely, the force "which propels the ship," though called then a "forward acting reaction," it is, as shown, the algebraic sum of the reactions of the propelling and supply jets.

It may not be amiss here to point out what I conceive to be an error in the preceding section 149, which is devoted to an explanation of Rankine's use of the terms "direct action" and "reaction." When Rankine defined the former as "the pressure arising from changing the direct component of the velocity of the water into the velocity of the vane," he did not mean that the change is always actually made, any more than the defining of a velocity as the velocity due to a certain height is an assertion that the velocity was actually produced by falling through the height. Rankine's "direct action" is nothing more than the reaction of the entering or supply jet, and he temporarily restricts his use of the term "reaction" to the reaction of the issuing jet, to facilitate his explanation of the effect of friction. It would have been clearer, perhaps, had Rankine said, instead of "arising from changing," either "necessary to change," or "due to changing."

Now Rankine says in the most emphatic way that the expression for direct action is always the same, and is not affected by any cause, and yet in the last half of Section 149 the author first gives the correct expression for the direct action, or pressure due to direct impulse, in Case 2, Section 146 (where $\phi < 90°$), and then concludes the section with a paragraph stating that, "if $\phi < 90°$, the whole pressure due to direct impulse is not obtained," because "the direct component is not wholly converted into the velocity of the vane." Now, this is not only a contradiction, pointing to a misunderstanding of Rankine, but a contradiction of the author's own formula, given three lines before.

Figure 204 illustrates case 2, § 146, while Fig. 205 supposes the vane to be of a slightly helical form, so that the water can enter and leave it in the same directions as in Fig. 204, but in doing so must pass through a complete circle in addition to the angle ϕ of the first vane. Indeed, the vane in Fig. 204 may be a portion of the same spiral, so that, neglecting friction, there will be absolutely no difference in the direct action, nor in the formula expressing it, and yet in Fig. 204 the "direct component is not wholly converted into the velocity of the vane," while in Fig. 205 it is, viz.: when it reaches the point a.

It is further stated that "if $\phi > 90°$, an additional pressure, due

to reaction, is obtained," so that the author's idea seems to be that when $\phi < 90°$ there is no reaction and only a partial direct impulse. However natural such a view may be, Rankine's object in making the distinction, which is the subject of the section, was to supplant it by a more scientific one, which enabled him to calculate frictional effects in a simple manner; and his "direct impulse" is absolutely independent of the form of the vane or vessel receiving the water, being equivalent to the reaction of the negative or entering jet, the word "reaction" being here used in its ordinary sense.

The word "mainly" has been introduced into the first line of the fifth paragraph of the paper, because I wish here to point out that it is not only useless to introduce $\sqrt{2gh}$ as the value of v, but

Fig. 204.

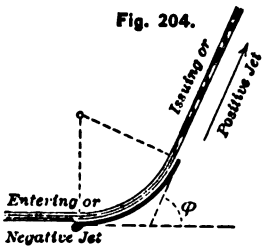

Fig. 205.

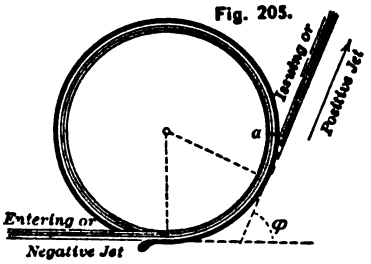

incorrect. The value of v is greater both when water is supplied to the vessel and when it is not; in the former case see Weisbach's treatment of the subject, and my review of it in the "Franklin Institute Journal" for August and November, 1887. It may be remarked here also that the introduction of the weight of a column of water $2h$ high to represent the reaction, though customary in such problems, is purely a mnemonic device, there being no such column existing or concerned in the phenomenon; it is also of questionable advantage, leading sometimes to serious misconceptions of dynamical action.

DISCUSSION.

*Prof. W. Cawthorne Unwin.**—Prof. J. Burkitt Webb has forwarded to me a paper containing a supposed exposure of an error in the article "Hydro-mechanics in the Britannica." As I am responsible for the whole of the part of that article which relates to hydraulics, I should like to make the following reply:

* Of London, England, by invitation of the Author and Society.

(1.) My article being written for terrestrial and not for cosmical purposes, the term "absolute velocity" means velocity relatively to the earth, as distinguished from velocity relatively to a body moving on the earth. Consequently, in whatever direction the vessel moved with the velocity u (absolute or relative to the earth), the reaction would be the same, and my equation does not involve the absurdity Mr. Webb supposes.

(2.) The expressions "absolute velocity" and "at rest" or "stationary" may not be unobjectionable, but they are in common use for motion or absence of motion relatively to the earth. With this simple explanation Mr. Webb's criticisms fall to the ground.

(3.) I may at the same time admit that, in a very condensed article the four or five lines in which the error is supposed to be found are expressed a little too briefly to be quite clear.

(4.) If no water is supplied to the vessel, the conditions are not steady, but the reaction at the moment may be found thus:

Backward momentum generated per sec.

$$= \frac{G}{g}\,\omega\, v\,(v - u).$$

Forward momentum destroyed per sec.

$$= \frac{G}{g}\,\omega\, v\, u.$$

Hence,

$$R = \frac{G}{g}\omega\, v\,\left\{(v - u) + u\right\}$$

$$= \frac{G}{g}\,\omega\, v^2.$$

(5.) I had, in writing, the case in mind where water initially at rest is supplied, so that the level in the vessel is constant and the conditions are steady; for that case the equation in the article is correct.

(6.) Exactly the same expression is found a few lines further on, in the article for the case of the jet-propeller. For that case the equation is well-known, is accepted by all authorities, and has been experimentally verified.

(7.) Mr. Webb has either misunderstood what I mean by absolute velocity, or his reasoning is unsound, or both.

Mr. Wm. H. Jenks.—(9.) In discussing the equation $\frac{G}{g}\,\omega v\,[v-u] = R$, Prof. Webb has failed to notice all of the conditions which are plainly implied, though not explicitly stated.

(10.) The expression $\frac{G}{g}\,\omega v\,[v-u]$ is a more general form than $\frac{G}{g}\,\omega v^2$, and, if derived directly, will make clear what conditions are evidently intended to be understood in the paragraph referred to.

$\frac{G}{g}\,\omega v^2 =$ the momentum generated by the stream of water issuing with the velocity v.

$\frac{G}{g}\,\omega v \times u =$ the force which must be applied to the quantity of water $\frac{G}{g}\,\omega v$, in order to give it the velocity u.

The net impelling force resulting is:

$$\frac{G}{g}\,\omega v^2 - \frac{G}{g}\,\omega v u = \frac{G}{g}\,\omega v\,(v-u).$$

(11.) That the conditions implied above are to be understood is made clear by the succeeding paragraph, which proceeds to apply this equation to the discussion of the jet propeller.

(12.) It is also clear that in order to determine the actual motion of the earth, as suggested, we must first know the actual motion of the water in space.

(13.) The omission to state fully and explicitly all of the conditions to be above understood cannot be called an error. Whether it might be called a blunder, or not, would depend upon the class of readers for whom the article was intended.

(14.) Strictly speaking, the R in formula $\frac{G}{g}\,\omega v\,(v-u) = R$, has the same meaning as the R in $\frac{G}{g}\,\omega v^2 = R$, only when $u = 0$. Though of comparatively little importance in this instance, it may serve to bring up a point to which some attention might profitably be called.

(15.) This is the desirability, in every publication intended for use as a work of reference, of accompanying every working formula by a clear definition of the meaning of each symbol in the formula.

These definitions should be so placed as to be readily found, and should be repeated with every such formula, however often the same symbol may have been used with the same meaning before.

(16.) At the time of writing, the author may have the subject well in his head; but the user has not, and for his benefit some pains should be taken to render clear and definite the meaning of each working formula without the necessity of going through the discussion.

Prof. Webb.—The written discussions upon my paper by Prof. Unwin and Mr. Jenks contain various denials of the existence of the error pointed out therein, accompanied by explanations as to how it was made and how it may be rectified.

Mr. Jenks thinks (13) it "cannot be called an error," but may be "a blunder," as if the latter term were less severe than the former. This suggests that in making this distinction the meaning of one of these words has been unconsciously illustrated; for "Webster" says: "An *error* is a deviation from that which is correct. A *blunder* is a mistake or error of the grossest kind. It supposes a person to *flounder* on in his course, either from carelessness, ignorance, or stupidity. An error may be corrected or forgiven; a blunder is always considered blamable, and usually exposes a person to shame and ridicule."

The paragraphs of these discussions have been numbered serially; and, in what I have to say in reply, a bracketed number refers to the paragraph replied to.

The expressions (2) are unobjectionable, though not confined, in common or mathematical use, to motion with respect to the earth, even in articles written solely "for terrestrial purposes" (1); moreover, their meaning has nothing to do with the error pointed out in the formula for R, which exists no matter how u is referred. This ought to be clear from the Appendix.

I presume that when Prof. Unwin says (1) that "in whatever direction" u might be, the "reaction would be the same," he means to say that his value for R will remain unchanged, always supposing the jet to be opposite to u. It would be a curious formula, indeed, that altered its value without anything in it being changed. The fact is that u should not be in the formula at all.

I do not see that the error can be explained (3) as a want of clearness, at least not in the language of the paragraph criticised, and in (5) and (6) the cause of the error is stated to be that another case was in mind, for which case the formula is correct, and that

the same expression is to be found under that case, where it is known to be true. Mr. Jenks also (11) would make the "succeeding paragraph" responsible for the error Now that part of Section 150 devoted to the "jet propeller" has a heading of its own, introduces its own conditions, makes no direct references to the preceding part of the section, designates the quantities mainly in question with different letters, and produces its equations *de novo*. It does not, therefore, "proceed to apply this equation to the discussion of the jet propeller" (11), and furnishes no argument for the anticipation of those conditions in the paragraph criticised. Indeed, were the conditions under which the formula is claimed to be correct introduced, the paragraph would become superfluous—containing nothing but what is immediately repeated under "Jet Propeller," and this in (3) "a very condensed article."

But "exactly the same expression" (6) is not found under "Jet Propeller." One formula attempts to give the value of R, the reaction of a jet, while the other gives the value of P, the propelling force (see Appendix). P is not R, and in general has not the same line of action. Whether the flow be supposed steady or unsteady, (5), (4), the same formula should result; and the formula cannot be saved by supposing that there must necessarily be a supply of water, which will bring u into the formula. The vessel g of the Appendix is supplied in two ways, and neither allows u to appear.

One of the first experiments made on jet propulsion will serve to show that the formula is wrong. About the year 1800 Col. John Stevens, of Hoboken, N. J., and Chancellor Livingston, one of the committee that drafted the Declaration of Independence, at that time and afterward minister to France, who were living in the adjoining houses, 5 and 7 Broadway, N. Y., opposite Bowling Green, made an experiment with a small boat in a ditch or canal in their gardens bordering on the river. The boat was propelled by a jet issuing from a vessel of water on the boat, and these gentlemen supplied the vessel with water, to make the flow steady, by bailing it up out of the ditch and pouring it in. In doing so they followed along with the boat, and consequently the water poured into the vessel had already the velocity of the boat. Mr. Robert L. Stevens, then 12 years old, witnessed the experiment, and related the details of it to his nephew, who was kind enough to communicate them to me. The formula criticised will not hold for this experiment, and is therefore untrue.

After devoting half his reply to a defence of the formula, Mr.

Jenks, in (14), gets rid of u in an ingenious manner. "Strictly speaking, the R, in $R = G\,\omega\,v\,(v - u) \div g$, has the same meaning as the R in, etc."; *i. e.*, as was attached to it in the definition, "only when $u = 0$." Now, as the difference between making $u = 0$ and leaving it out altogether is infinitesimal, there ought to be no difficulty in seeing the error of the formula. Prof. Unwin gets rid of u in a less direct manner (4), and thereby produces the formula, $R = G\,\omega\,v^2 \div g$, which is the correct one; the supposition that "no water is supplied" (4) is exactly the supposition most in accordance with the first three paragraphs of section 150, and the only one consistent with Figs. 165 and 166; the latter figure belonging rather to the third paragraph than to the jet propeller, the conditions of which it represents in a very incomplete manner.

It is interesting to notice Mr. Jenks's idea of "plainly implied" (9) for to "make clear what conditions are evidently intended to be understood" (10), the formula (the incorrect one) is to be "derived directly" in some way which will make it correct; that is to say, the reader must find what changes in the conditions are necessary to make the formula correct, and then consider them as plainly implied. Treating a mathematical formula as though it were a reply of the Delphic Oracle is beneath the dignity of an encyclopædia, which ought not to expect its readers to correct errors or supply missing links. This seems, however, to be recognized in (15), (16), though the recommended repetition of definitions "with every such formula" would scarcely be practicable.

"As to (12), the experiment seems not to be understood; perhaps the Appendix may make it clearer; at any rate the motions of the vessel and water in space are the quantities to be determined, and need not be known. In (10), first formula, "momentum generated by a stream" is an absurdity. Momentum is generated by a force (number of pounds) acting for a time (number of seconds), and it would be as well to mention the time in both formulæ.

The following letter from Prof. A. G. Greenhill has been received since the meeting:

PROF. J. BURKITT WEBB,

Sir :—I have recently received your letter of the 15th April, and I am sorry to report that I have not yet received the previous communication you sent. Perhaps if I had been able to answer your letter immediately on its receipt, I might have been in time for the reading of your paper on the 14th May, to contribute in this manner to the discussion.

The point you raise is a very delicate and refined one in Dynamics, and ultimately turns upon the question as to whether it is possible to measure or even

realize *absolute* motion. Maxwell's "Matter and Motion," as you are probably aware, is chiefly devoted to a discussion of this question, and his answer is that our idea of motion must always be *relative*.

The motion considered in the problem you have criticised is the motion relative to the earth; and any differences in the results, due to a different orientation of the jet, will have to be discussed on the same theoretical grounds as the deflections of a projectile due to the rotation of the earth. Considering that in extreme ranges of projectiles these deflections are practically insensible, is it worth while to complicate the very simple formula you criticise with modifications which would introduce corrections which could not possibly be observed?

To take an analogous case in Astronomy, we say that the Earth's axis, in the day, practically points to a fixed star in the sky; but theoretically the axis, in consequence of precession, has described a cone about this mean position; calculation, however, shows that the semi-vertical angle of this cone is less than 0."01, so that we need not regard it and indeed could not detect it.

The "Section 150" is from the part in Hydraulics due to Unwin. but still I am pleased to have this opportunity of joining the discussion on your criticisms.

To narrow the points at issue as much as possible, consider the elementary dynamical phenomenon of a body sliding on a smooth plane, like a sheet of ice, when the modifications due to motion towards different points of the compass are taken into account.

Thanking you very much for informing me of the interesting points you have raised, and hoping they will lead to an animated discussion, I remain,

Yours very sincerely,

A. G. GREENHILL.

ARTILLERY COLLEGE, WOOLWICH, ENGLAND.
11*th May*, 1889.

Prof. Greenhill's courteous reply, received at the close of the meeting, refers principally to the suggestion made in the last third of the paper, and says practically nothing as to whether the error exists or not.

It contains the same ideas of absolute and relative motion as those upon which the paper is based, but shows a misconception of the suggested experiment, that could be made to determine the motion o the earth were the formula correct.

I cannot see that the motion of a projectile after leaving the gun, or that of a body sliding upon a plane, has any connection with the reaction of water flowing out of a vessel. The phenomenon of the issuing jet is an instantaneous one, and is in no wise affected by any uniform motion that the vessel containing the water may have, whereas the path described by a projectile requires time for its formation, and during that time the earth rotates, so that while the path in space is not changed, the path with respect to the earth is curved sideways. This latter phenomenon can be illustrated in the simplest way by attempting to draw a straight

line upon paper with a ruler long enough for its ends to extend beyond the paper and rest firmly upon the table. If the paper does not slip, the line will be straight; but if the ruler or table is hollow, sufficiently to allow the paper to slip round gradually under the ruler as the line is drawn, a curved line will result. But there is no connection between this and the reaction of a jet, nor does my proposed experiment involve this principle.

As to the astronomical illustration given by Prof. Greenhill, the error pointed out in my paper is not a small one, so as to be comparable to one of a hundredth of a second of arc; it might, on the contrary, be a very large per cent. of the whole reaction. As to the illustration itself, I am not aware of any such effect of precession, and suppose that Prof. Greenhill may (as suggested by a friend) refer to a nutation which is the subject of a paper by L. DE BALL, "Ueber die Entstehung einer täglichen Nutation durch die Ungleichheit der Hauptträgheits momente A und B;" published in *Ast. Nachr.*

If Prof. Greenhill will reconsider my criticism, I believe he will see that the statement in the Encyclopædia Britannica should be corrected.

CCCLIII.

PERFORMANCE OF A THIRTY-FIVE TON REFRIGERATING MACHINE OF THE AMMONIA ABSORPTION TYPE.

BY J. E. DENTON, HOBOKEN, N. J.

INTRODUCTION.

THE refrigerating machine under notice is one of 35 tons, rated capacity, which is in operation at the pork-packing establishment of Messrs. Sperry & Barnes, New Haven, Conn., where it is used to maintain about 400,000 cubic feet of space at an average temperature of about 34° Fahrenheit.

This space is all above the level of the ground, and is principally composed of rooms in which about 800 freshly slaughtered hogs are hung during each afternoon.

The duty of the refrigerating machine is to chill these carcasses, so that they can be cut up and packed within the next twenty-four hours. The refrigerating effect of the machine is initially received by brine, which is brought into contact with the ammonia expansion vessels in the machine room, and then conducted through pipes running along the ceilings of the rooms to be cooled.

The machine was put into operation in April, 1888, and during August of that year its performance was measured during a period of ten hours, under the joint direction of Mr. A. P. Trautwein, the engineer in charge of the erection of the machine, and Mr. Porter, of the firm of Sperry & Barnes. The results obtained upon this test showed the machine to have a capacity equivalent to nearly 42 tons of ice-melting capacity for twenty-four hours, and an economy equivalent to the production of 258 thermal units of refrigerating effect per pound of steam consumed, using 0.81 as the value of the specific heat of brine. The fact that the apparatus was in place for making a measurement of the performance of the machine coming to the knowledge of the writer, he made application for permission to make a more extensive test by measuring the performance of the machine continuously for one week. This was

J. E. DENTON.

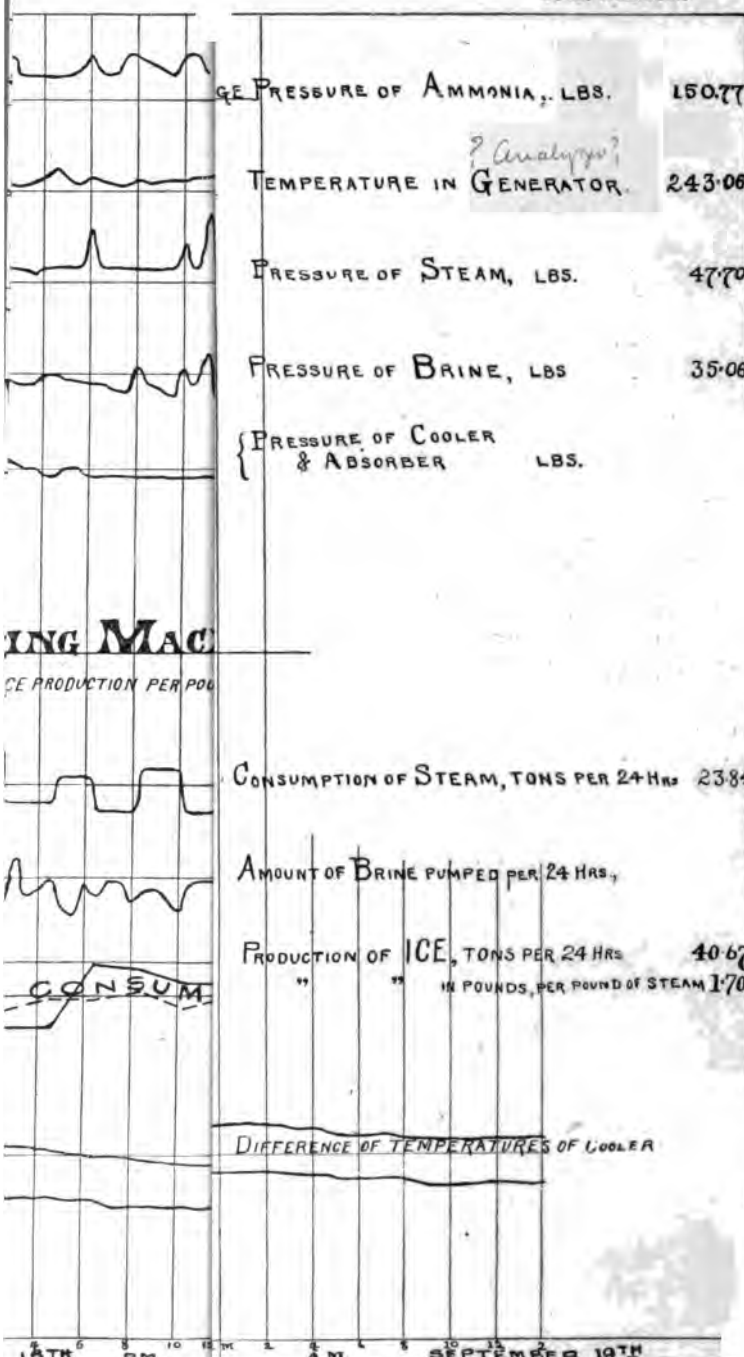
GE PRESSURE OF AMMONIA, LBS. 150.77
? Analysis ?
TEMPERATURE IN GENERATOR. 243.06
PRESSURE OF STEAM, LBS. 47.70
PRESSURE OF BRINE, LBS 35.06
PRESSURE OF COOLER & ABSORBER LBS.
ING MAC
CE PRODUCTION PER POU
CONSUMPTION OF STEAM, TONS PER 24 HRS 23.84
AMOUNT OF BRINE PUMPED PER 24 HRS.,
PRODUCTION OF ICE, TONS PER 24 HRS 40.67
" " IN POUNDS, PER POUND OF STEAM 1.709
CONSUM
DIFFERENCE OF TEMPERATURES OF COOLER
18TH P.M. A.M. SEPTEMBER 19TH

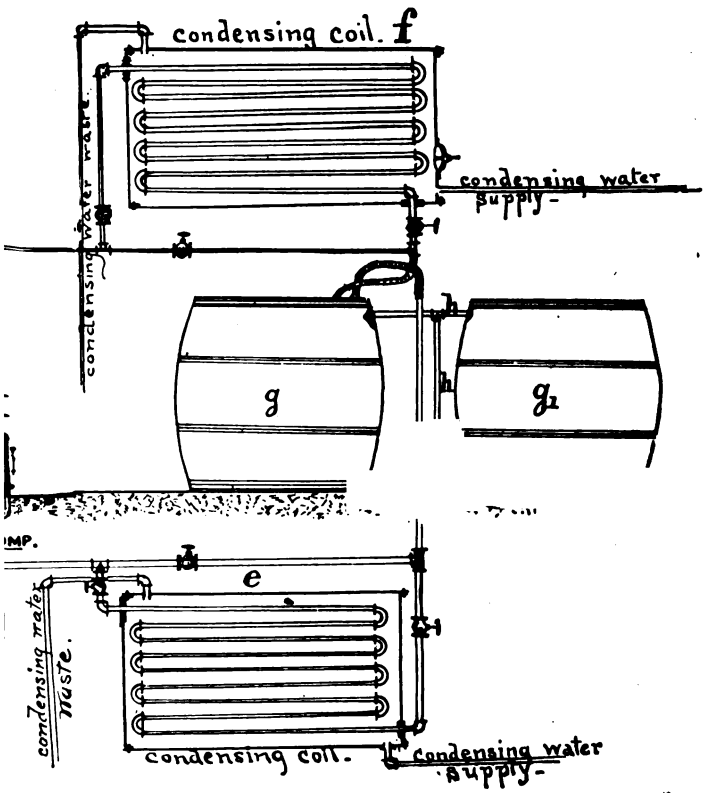
condensing coil. f
condensing water waste.
condensing water supply.
h
h
g
g1
IMP.
e
condensing water waste.
condensing coil.
condensing water supply.

cordially granted by Messrs. Sperry & Barnes, who furnished every assistance within their facilities to aid in making a thorough practical test. The results of this test constitute the basis of the present paper, Fig. 198 showing the detailed observations for a period of seven days of twenty-four hours. The averages of the various measurements are shown in Table I. A study of the brine temperatures in Fig. 198 will show that the period of the test embraced the entire range of temperatures to which the machine was subject, the brine reaching the same minimum and maximum twice during the seven days.

The results which measure the practical or commercial value of the machine are:

1st. That the total refrigerating effect of the machine during twenty-four hours was equivalent to the cooling of the circulating brine, an amount equal to the heat which would melt 40.67 tons of ice to water at 32° Fahr., or freeze 40.67 tons of water at 32° Fahr. into ice. This work is what is to be understood as "40.67 tons of ice-melting capacity."

The data and calculations affording this result are as follows:

$$\left.\begin{array}{c}\text{Tons ice-}\\\text{melting ca-}\\\text{pacity}\end{array}\right\} = \left\{\begin{array}{c}\text{Hours per}\\\text{day}\end{array}\right\} \times \left\{\begin{array}{c}\text{Pounds of}\\\text{brine circu-}\\\text{lated per}\\\text{hour}\end{array}\right\} \times \left\{\begin{array}{c}\text{Specific}\\\text{heat of}\\\text{brine}\end{array}\right\} \times \left\{\begin{array}{c}\text{Range of}\\\text{temperature}\\\text{of brine}\end{array}\right\} \div \left\{\begin{array}{c}\text{Latent heat}\\\text{of ice, Brit-}\\\text{ish thermal}\\\text{units, by}\\\text{No. of lbs.}\\\text{in a ton.}\end{array}\right.$$

$$40.67 = 24 \times 119{,}260 \times 0.80 \times 5.05 \div 142 \times 2{,}000$$

2d. That if each pound of fuel consumed at the boilers evaporated 10 lbs. of water into steam at 45 lbs. pressure above the atmosphere, then each pound of fuel consumed in operating the refrigerating machine produced an amount of refrigerating effect equivalent to the heat which would melt 17.1 pounds of ice to water at 32° Fahr., or freeze 17.1 pounds of water at 32° F. into ice.

The data and calculations giving this result are as follows:

$$\left.\begin{array}{c}\text{Ice-melting}\\\text{capacity per}\\\text{lb. of fuel}\end{array}\right\} = \left\{\begin{array}{c}\text{Pounds of}\\\text{brine circu-}\\\text{lated per}\\\text{hour}\end{array}\right\} \times \left\{\begin{array}{c}\text{Spe-}\\\text{cific}\\\text{heat}\end{array}\right\} \times \left\{\begin{array}{c}\text{Range of}\\\text{temperature}\\\text{of brine}\end{array}\right\} \div \left[\left\{\begin{array}{c}\text{Latent}\\\text{heat}\\\text{of ice}\end{array}\right\} \times \left\{\begin{array}{c}\text{Pounds of}\\\text{steam per}\\\text{hour divid-}\\\text{ed by as-}\\\text{sumed}\\\text{boiler evap-}\\\text{oration per}\\\text{lb. of fuel.}\end{array}\right\}\right]$$

$$17.1 = 119{,}260 \times 0.80 \times 5.05 \div 142 \times 1{,}986 \div 10$$

DESCRIPTION OF MACHINE AND ARRANGEMENT OF APPARATUS.

Ammonia gas is distilled from a solution of about 28 % anhydrous ammonia in water in the vessel *A*, Fig. 199, by means of the heat supplied by a steam coil taking its steam from the boiler *B*. This gas passes upward to *C* through a series of plates, which cause the

gas to take a tortuous passage, and thereby, in conjunction with the drip-pipes, induce any entrained steam or water to separate from the gas, so that the latter may pass into the condensing coil *D*, free from all influence due to the presence of water.

The coil *D* is immersed in water drawn from an artesian well *E*, which maintains it at an average temperature of about 68° Fahr., so that the ammonia gas, which is under a pressure of about 150 pounds, must liquefy and accumulate in the bottom of the coil *D*, or in the reservoir *F*. From this reservoir it flows into a vessel *H* at a constant rate, regulated by the degree of opening of the valve *G*. The vessel *H* is maintained at a pressure of about 24 lbs. above the atmosphere through the suction of a pump *I*, which withdraws gas from *H* by steps presently to be described. The liquid ammonia relieved of pressure by entering *H* falls in temperature from about 68° to about 5° Fahr. through the fact that in the expansion of the liquid from the 150 lbs. pressure to the 24 lbs. pressure, a small fraction volatilizes, and the heat to supply the work, necessary to cause the volatilization, is abstracted from the liquid ammonia itself, thereby causing the temperature of the latter to fall.*

Through the coil shown in *H*, brine is circulated, which on entering is at about 22° Fahr. The refrigerated ammonia coming into contact with the brine coils, heat flows rapidly from the brine into the ammonia; and as the latter is maintained under the constant pressure of 24 lbs., for which pressure its boiling point is 5° Fahr., the heat thus taken from the brine causes the liquid ammonia to be entirely changed into vapor of ammonia at 24 lbs. pressure. The brine is thereby reduced in temperature from 24° to about 16° Fahr. The brine is pumped through the rooms or buildings to be refrigerated by the pipe *J*, *J*, *J*. The ammonia gas passes into the vessel *K*, which is maintained by the pump suction at a pressure of about one-half pound per square inch

* The lowest limit of temperature here given is not to be understood as the lowest possible limit with this type of machine. A pressure of about ten pounds above the atmosphere may be maintained in *H*, and thereby the lowest temperature of the ammonia made about minus 12° Fahr. Such a pressure is adopted in a machine of the type under notice in use at the Gansevoort Cold Storage Warehouse, New York city, where observations by the writer have shown that the lowest temperature of brine averages less than zero Fahrenheit; which would require that the lowest temperature of the ammonia should be about minus 12° Fahr. allowing 11° difference between the inside temperature of brine coils and the ammonia on the outside of the coils.

below that in *H*. The gas mixes in *K* with aqua ammonia, from which considerable of the ammonia has been distilled in *A*. This is called weak ammonia liquor.

The latter is the portion of the contents of *A* lying near its bottom, by virtue of the fact that the aqua ammonia has an increased specific gravity approaching that of pure water, in proportion as the ammonia is distilled from the original solution with which *A* is charged. Consequently the pipe *L*, having its open end close to the bottom of the vessel *A*, draws off a current of the weak ammonia liquor and delivers it through the heater *M*, and thence through the pipe *N*, *N*, into the absorber *K*, where it commingles with the cold ammonia gas which enters through the pipe *O*, *O*. The current of weak ammonia liquor is controlled in amount by a throttle valve *P*, which is so regulated that a constant level of liquid is maintained in the bottom of *K*, the level being shown to the eye by the water glass *Q*. The cold ammonia gas is absorbed by the weak ammonia liquor, thereby causing the latter to become saturated with ammonia to the same degree as the original aqua ammonia charged into *A*, and the mixture is pumped back into *A* by the pump *I*, along the pipe *R R*, a part of which is the coil in the heater *M*. The combination of the gas and weak ammonia liquor in the vessel *K* is a chemical one, and generates a large amount of heat. If this heat were allowed to elevate the temperature of the contents of *K* above about 110°, the chemical combination would not take place with sufficient rapidity. Consequently, the coils in *K* carry through them a stream of cooling water sufficient in quantity to absorb the heat due to the chemical union taking place in *K*, without permitting the temperature of the latter to exceed about 110° Fahr. *In the machine under notice the same water which circulates about the coil D also sufficed to cool the coil in K.* This water was obtained from the well *E*, at a temperature of about 56 Fahr., and was raised to about 80° Fahr. in circulating about the coil *D*. It then was conducted to the vessel *K* by the pipe *S S*, and had its temperature elevated to about 110° as it issued at *W*, and then flowed to waste. The object of making the pipes *L* and *R* lead through a common vessel, *M*, is to cause the hot liquor issuing through *L* to give up sufficient heat to the current of cold liquor *R R*, to elevate the temperature of the latter to the temperature of the contents of *A*.

If the high temperature of the weak liquor were not reduced

until it reached the vessel *K*, it would then be reduced to about 110°, and the heat thus removed flow to waste. But by the use of the heater *M*, such heat is returned to the boiler without much loss.

THEORETICAL CYCLE.

The various heat transformations described above are represented graphically in Fig. 200. Thus, the point *a* represents the

FIG. 200.

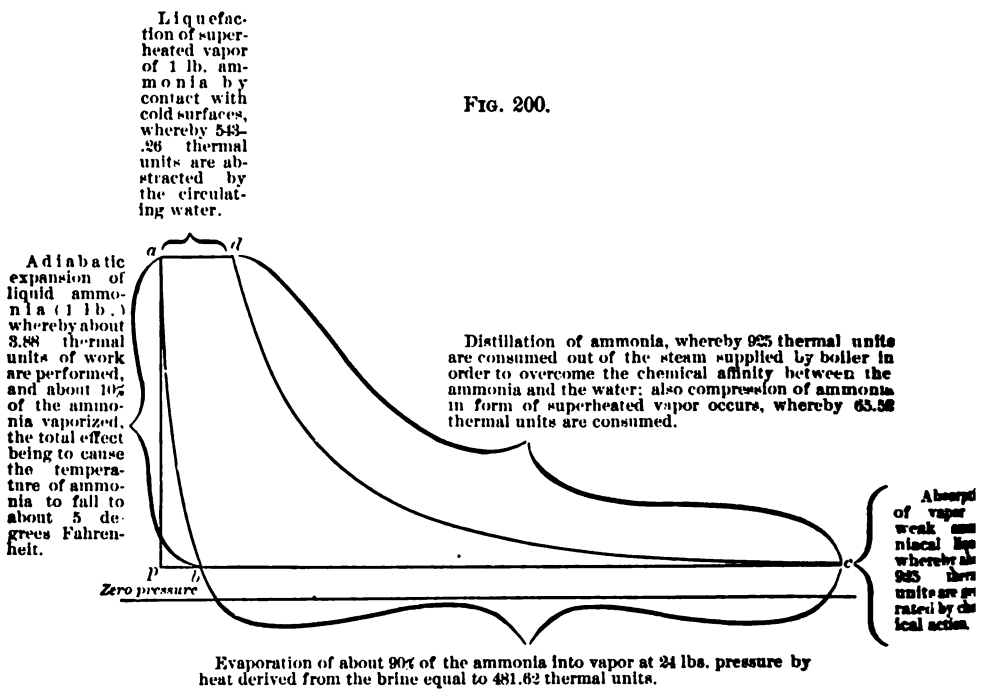

SUMMARY OF HEAT DISTRIBUTION.

$$\text{Heat taken from ammonia} \left\{ \begin{array}{r} 3.88 \\ 543.26 \\ 925.00 \\ \hline 1{,}472.14 \end{array} \right\} = \left\{ \begin{array}{r} 65.52 \\ 481.62 \\ 925.00 \\ \hline 1{,}472.14 \end{array} \right\} \text{Heat given to ammonia.}$$

liquefied ammonia in the coil *D*, under about 150 lbs. pressure. The line *a p b* approximately represents the expansion of the 10 per cent. of ammonia, which volatilizes when the latter passes into the cooler or vessel *H*, through a simple cock, and the line *ab* when the expansion is supposed to take place behind a piston. The line *b c* represents the volatilization of about 90 per cent. of the ammonia, which causes the refrigeration of the brine. At the

point c the absorption of the ammonia gas in the weak liquor occurs. The line $c\,d$ represents the result of the action of heat from the steam coil in A, in dissociating the ammonia from the water absorbant and the subsequent compression of the resulting gas to the pressure at d, where it exists as a superheated vapor.

The line $d\,a$ represents the condensation of the superheated ammonia to the liquid condition, which takes place in the coil D. As a mere illustration, the probable interchanges of heat which take place during each of these steps, as estimated from a theoretical basis, are indicated on the plate; the figures are in accordance with those given in Ledoux's Science Series, "Essay on Ice Machinery," and *assume* that the heat of dissociation in the generator is the same as the heat of solution in the absorber.

So far as we now know, the cycle is equivalent to that of a compression machine, except in the item of expenditure represented by the 925 units required by the dissociation phenomenon, about which there is dearth of experimental data at pressures greater than the atmosphere. The compression system expends the same heat (65.52 units) in compressing its gas, but there is not the double phenomenon of compression and dissociation as in the absorption system. But the compression system expends, through the exhaust of a steam engine, an amount of heat practically equal to the 925 units, devoted to dissociation in the absorption system, so that, losses from friction and leakage neglected, the economy of both systems should be the same, if the heat of dissociation is as given in Ledoux; namely, 514 calorics per kilogramme of ammonia, or 925 * units per pound for both absorber and generator.

TABLE I.

RESULTS OF TEST OF 35-TON REFRIGERATING MACHINE AT PACKING-HOUSE OF SPERRY & BARNES, AT NEW HAVEN, CONN.

SEVEN DAYS' CONTINUOUS TEST, SEPT. 11–18, 1888.

Average Pressures above atmosphere in lbs. per sq. inch.	Generator	150.77
	Steam	47.70
	Cooler	23.69
	Absorber	23.4

* Theoretical deductions regarding the value of this quantity and of latent heat, etc., are in preparation.

TABLE I.—*Continued.*

Average Temperatures in Fahrenheit Degrees.	Atmosphere in vicinity of machine	80
	Generator	272°
	Brine { Inlet	21.205
	Brine { Outlet	16.16
	Condenser { Inlet	54½
	Condenser { Outlet	80
	Absorber { Inlet	80
	Absorber { Outlet	111
	Heater { Upper outlet to generator	212
	Heater { Lower " " absorber	178
	Heater { Inlet from absorber	132
	Inlet from generator	272°
	Water returned to main boilers from steam coil	260
Average Range of Temperatures Fahr. Degrees.	Condenser	25½
	Absorber	31
	Brine	5.05
Brine Circulated per hour.	Cubic feet	1,633.7
	Pounds	119,260
Specific heat of brine		0.800
Cooling capacity of machine in tons of ice per day of 24 hours		40.67
Steam consumption per hour, to volatilize ammonia, and to operate ammonia pump ... lbs.		1,986
British Thermal Units.	Eliminated { Per pound of brine	4.04
	Eliminated { Total per hour	481,260
	Of refrigerating effect per pound of steam consumption	243
	Rejected { At condenser, per hour	918,000
	Rejected { At absorber "	1,116,000
	Per pound of steam { On entering generator coil	1,203
	Per pound of steam { On leaving generator coil	271
	Consumed by generator per lb. of steam condensed	932
Condensing water per hour, in lbs		36,000
Equivalent ice production per pound of coal, if one pound of coal evaporates ten pounds of steam at boiler		17.1
Calories refrigerating effect per kilogramme of steam consumed		135
Approximate coil surface in square feet.	Condensing coil	870
	Absorber "	350
	Steam "	200
Sizes, in inches, of Duplex Pumps.	Ammonia pump { Dia. steam cyl	9
	Ammonia pump { " ammonia cyl	3½
	Ammonia pump { Stroke	10
	Brine " { Dia. steam cyl	9½
	Brine " { " brine "	8
	Brine " { Stroke	10
Total Revolutions per minute.	Ammonia pump, one	22
	Brine pump, two	70
Effective stroke of pumps, part of full stroke		0.8

SPECIAL ARRANGEMENT FOR TESTING PERFORMANCE OF MACHINE.

The measurement sought was the equivalent of the refrigerating effect per pound of steam consumed, the refrigerating effect being stated in tons of ice, the melting of which would require as many British thermal units as were abstracted from the brine during twenty-four hours. To make this determination, the following steps were taken:

1. The brine was passed through a meter *V*, which was arranged so that, by a 3-way cock *X*, the brine could be diverted from its regular course *J Y Y*, *X Y J*, and caused to flow into large hogsheads $Z Z_1$, holding 100 cubic feet, whereby the meter was accurately standardized under its actual conditions of use, the details of which process will be described hereafter.

2. The temperature of the brine was measured at its entrance and exit, respectively, by thermometers *d* and *c*.

3. The steam consumed by the coil* in *A*, and by the pump *I*, was led through surface condensers *e* and *f*, and thence into hogsheads *g* and g_1, whose capacity was determined by weight for the level controlled by the overflow pipe *h h*; the small vessel *i* receiving any accidental overflow, and thereby preserving it for measurement. Flexible hose enabled the filling of the hogsheads alternately; the water collected in *g* and g_1 was at an average temperature of 95°, for which temperature it was determined that no sensible loss from surface evaporation occurred.

4. The cooling water was measured by a meter, *k*, and thermometers at *l*, *m*, and *n* determined its temperature. Thermometers at *p* and *q* were also used, and pressure gauges to the various vessels were connected at *t*, as indicated.

PROPERTIES OF BRINE USED TO ABSORB REFRIGERATING EFFECT OF AMMONIA.

The brine was a solution of Liverpool† salt in well water having a gravity of 1.17 times the weight of distilled water, or a weight per cubic foot of 73 pounds.

Such brine will not sensibly thicken or congeal at 0° Fahrenheit. Twenty pounds of brine were drawn from the cooler

---

* This coil ordinarily exhausted into a trap *j*, whence the steam was returned to the boiler *B* at a temperature of 260° Fahr.

† It is reported that brine of 1.17 gravity, made with American salt, begins to congeal at about 24° Fahr.

of the machine, and its specific heat determined by a method to be described below. The result of the determination gave as the mean specific heat between 39° and 16° Fahr. 0.805. Brine of the same specific gravity has a specific heat of 0.805 at 65° Fahr. according to Naumann.

TABLE II.

SPECIFIC HEAT OF BRINE AS GIVEN BY DR. ALEX. NAUMANN IN *Lehr- und Handbuch der Thermochemie*, 1882, *p.* 291.

Specific heat.	Specific gravity.	
0.791	1.1872	
0.805	1.1700 *	* Interpolated.
0.863	1.1033	
0.895	1.0718	
0.931	1.0444	
0.962	1.0234	
0.978	1.0118	

During the experiments under notice the temperature of the brine ranged between 22° and 16° Fahr. It was hoped that the specific heat might be determined for this particular range of temperature. But time has thus far not permitted the work to be done.

For the calculations of this paper, therefore, a specific heat value of 0.8 is adopted as the probable mean specific heat of the brine over the range of temperature observed during the test.

METHOD OF DETERMINING SPECIFIC HEAT OF BRINE BETWEEN 39° AND 16° FAHR.

Through the courtesy of the Gansevoort Freezing & Cold Storage Co., New York, a room was at my disposal which was constantly maintained at a temperature of about 9° Fahr.

A cylindrical vessel, about 14 inches diameter and 20 inches high, could be filled with hot water and be placed in this room, when well covered with hair felt, without losing but a few degrees of temperature in several hours, and the heat radiated from this vessel, together with that given off from an alcohol lamp and by one or two persons in the room, cause no sensible variation of the latter during the same time. In the center of the hot-water vessel was a 6-inch pipe, open to the air at both ends. In this pipe

was hung a copper flask of water about 5 inches in diameter and 5 inches high. This flask, containing about 2¼ pounds of distilled water, was heated to about 130° Fahr. with an alcohol lamp, and then suspended within the hot-water vessel until the temperature of the water was so nearly the same as that of the space surrounding the flask that no change of temperature at either point occurred within a known interval of time.

The hot-water vessel was mounted upon a wooden box, about twenty inches cube, so that, by withdrawing a slide, free communication could be caused between the pipe containing the flask and the interior of the box, and the flask could then be lowered into a vessel placed within the box, containing about ten pounds of brine, at about 16° Fahr. By this arrangement the loss of temperature during the passage of the distilled water from the interior of heating vessel into the cold brine was very small, being determined by experiment to amount to 0.1° Fahr.

Referring to the following tabular record of experiment I., the details of a determination were as follows:

At 3.11 P.M., the temperatures of the inside and outside of the water flask had become stationary at 113.4° and 110°, respectively.

The temperature of the brine at 3.20 was falling at the rate of 0.2° per five minutes. The brine vessel was placed within the box, and received the flask of water at 3.22. From 3.22 to 3.30 the water flask gave out heat to the brine with sufficient rapidity to cause the latter to continue to increase in temperature. The experiment was continued, however, until 3.34, to allow the temperature of the distilled water to approach a little nearer to that of the brine. The water flask was then withdrawn, and the loss of temperature of the brine by radiation during an interval of five minutes was found to be 0.6 degree, making the radiation per degree difference of temperature between the room and the brine 0.022 per five minutes of time.

The latter figure is called the radiation constant. To determine the loss of temperature during the entire experiment, we must know whether the radiation constant is the same for all differences of temperature between the room and the brine, between 17° and 37°. It was determined by a special set of experiments, that, for a temperature of about 17°, the radiation constant was 0.018; for a temperature of brine of 22°, the radiation constant was 0.019.

Consequently the average of the radiation constant is 0.020.

We have for the average difference of temperature between the room and the brine

$$\frac{17.1 - 9 + 36.6 - 9}{2} = 17.5°.$$

The duration of the experiment was

$\frac{12}{5}$ five-minute intervals.

The total radiation was therefore

$$\tfrac{12}{5} \times 17.5 \times 0.0205 = 0.84°,$$

which must be added to the range of temperature observed in the brine, so that the actual range is $37.2 - 17.1 + 0.84 = 20.94.°$

The brine vessel was of sheet copper, entirely uncovered, and, taken at the specific heat of copper, was equivalent to 62.5 grammes of water. It is assumed that two-thirds of this vessel was heated through the range of 20.94°, and that the other third remained at the temperature of the atmosphere.

It is also assumed that two-thirds of the water flask was at the temperature inside the flask, and the other third at the temperature outside.

The remaining steps of the calculations of the specific heat are indicated in the following record of each experiment. The instrumental error, including fifty per cent. modification of the assumption that one-third the weight of the vessels remains at the temperature of the air, would aggregate one unit in the second place of decimals of the specific heat value.

SPECIFIC HEAT OF BRINE.

Water flask, 0.328 K, equivalent to 30.5 grammes water.
Brine vessel, 0.665 K, equivalent to 62.5 grammes water.
Brine, 4,700 grammes. } Loss of temperature of flask in passing from heating
Water, 1,047 " } reservoir into brine 0.1°.

EXPERIMENT I.

Time.	Temperature. Brine.	Flask. Inside.	Flask. Outside.	Room.
P.M.				
3.11		113.4°	110.°	9°
.15	17.4°	"	"	"
.20	17.2	"	"	"
*.22	17.1	"	"	"
.30	37.2	41.4	"	"
.32	37.2	40.0	"	"
†.34	37.2	39.0	"	"
.39	36.6	Radiation Const. 0.022		

Time of experiment, 3.22–3.34 = 12 min.
Gain by brine, 37.2°−17.1° = 20.1°
Radiation, $\frac{12}{5} \times 17.5 \times 0.020 =$ 0.84°

20.94°

Heat absorbed by brine vessel:
$\frac{2}{3} \times 62.5 \times 20.94°$ = 872.5
Heat absorbed by brine:
$4{,}700 \times 20.94°$ = 9,841.8
Lost by water, 113.3°−39° = 74.3°
Total heat lost by water:
74.3×1047 = 77,792
Heat lost by water flask:

$$30.5 \left[74.3 + \frac{(39-37.2)}{3} - \frac{(113.4-110)}{3}\right] = 2{,}249.9$$

80,041.9
Less 872.5

79,169.4

Specific heat $= \frac{79{,}169.4}{98{,}418} = 0.805.$

EXPERIMENT II.

Time.	Temperature. Brine.	Flask. Inside.	Flask. Outside.	Room.
A.M.				
11.35	16.4°			10
.40	16.3	126.6°	122	"
.42		126.4	"	"
.44		126.3	120	"
.45	16.1			"
.46		126.2	119	"
.48		126.0		"
.50	16.0	125.8	118	"
*.52	15.95	125.6	"	"
.57	35.2	54.2		"
12.02	39.2	40.8		"
.03	"	40.3		"
†.04	"	40.		"
.09	38.6	Radiation Const. 0.021		

Time of experiment 11.52–12.04=12 min.
Gain by brine, 39.2°−15.95° = 23.25°
Radiation, $\frac{12}{5} \times 1.75 \times 0.020 =$ 0.84

24.10°

Heat absorbed by brine vessel:
$\frac{2}{3} \times 62.5 \times 24.10°$ = 1,004.2
Heat absorbed by brine:
$4{,}700 \times 24.1°$ = 113,270
Temp. lost by water:
125.5°−40° = 85.5°
Total heat lost by water:
$85.5 \times 1{,}047$ = 89,518.5
Heat lost by water flask:

$$30.5 \left[85.5 + \frac{0.8}{3} - \frac{7.6}{3}\right] = 2{,}630.14$$

92,148.6
Less 1,004.2

91,144.4

Specific heat $= \frac{91{,}144.4}{113{,}270} = 0.805.$

* Indicates commencement of experiment. † Indicates termination of

EXPERIMENT III.

Time.	Temperatures.			
	Brine.	Flask.		Room.
		Inside.	Outside	
P.M. 1.15	14.5	123.4	114	9.5
.20	14.4	122.7	"	"
.25	"	"	113	"
.26	"	"	"	"
*.27	"	"	"	"
.32	34.6	49.0	"	"
.37	37.2	39.8	"	"
.38	"	39.2	"	"
†.39	"	38.8	"	"
.44	36.6	Radiation Const. 0.022.		

Time of experiment, 1.27–1.39 = 12 min.
Gain by brine, 37.2° − 14.4° = 22.8°
Radiation, $\frac{12}{5} \times 15 \times 0.02$ = 0.72

23.52°

Heat absorbed by brine vessel:
$\frac{2}{3} \times 62.5 \times 23.52$ = 980
Heat absorbed by brine:
4,700 × 23.52 = 110,544
Temp. lost by water:
122.6° − 38.8° = 83.8
Total heat lost by water:
83.8 × 1047 = 87,738.6
Heat lost by water flask:
$30.5 \left[83.8 + \frac{1.6}{3} - \frac{9.7}{3} \right]$ = 2,473.6

90,212.2°
Less, 980.

89,232.2°

Specific heat = $\frac{89,232.2}{110,544}$ = 0.808.

MEASUREMENTS OF TEMPERATURE.

The standard of reference for temperatures was a special thermometer, made by Henry J. Green, of New York, having a range from minus 20° to 125° Fahrenheit, graduated to fifths of degrees over a length of about 20 inches. This standard instrument was kept in a room at low temperature, where a pail of brine could be maintained for long periods at any temperature within the range of the temperatures of the inlet and outlet brine at the cooler of the machine.

Other thermometers of the same make and proportions as the standard, but of less expensive construction, were used to observe the temperatures at the various parts of the machine, each of which was compared daily with the standard in the cases of the brine temperatures, and at the beginning and end of the week's run for the higher temperatures.

The *temperatures of the brine upon which the practical measurement of performance depends were determined by thermometers which*

* Indicates commencement of experiment.
† Indicates termination of experiment.

were inserted in a tube of mercury screwed into the brine pipes, so as to project about three-fourths of an inch within the inside surfaces of the pipes. The temperatures at the absorber were also taken in the same manner. In the case of other temperatures, such as those at the heater and along ammonia pipes, etc., the pipes containing the fluid were too small to permit of the insertion of a mercury tube, and the temperatures were taken by immersing a thermometer in a small volume of mercury lying upon the outside of the pipes, enclosed within a block of wood. Experiments * made to determine the error of this method of observing temperature indicate that four degrees should be added to the actual reading of the thermometer for a temperature of 200°, and twelve degrees for a temperature of 300°, and proportional additions have been made to the readings of the heater thermometers.

It was determined, by immersing the mercury tubes in brine of known temperature, that no error existed in their use when they were screwed into the pipes as described above.

The standard Green thermometer was found to agree with the standards of the Yale Thermometric Bureau.

MEASUREMENT OF CIRCULATING WATER.

In view of certain alterations of pipe connections which were in progress during the time of the test, the water meter, shown at *k* in the general view, could not be conveniently used, and the measurement of water was therefore determined as follows:

A float was arranged in the tank containing condensing coil, *D*, so that, whenever the level of the water rose above or fell below a certain limit, an electric alarm bell was sounded, and an attendant would then regulate the supply of the water by a valve.

The level of the float determined the flow of water to the absorber through the pipe *S S*.

The meter, *k*, was used for ni h
as adjusted by the alarm bell. T a
thus determined to be 36,000 po
the average flow through the seven da
regulated by the electric float as explai

The water meter was calibrated by

* Messrs. Anderson and Page determined t a
mercury held on the exterior of a pipe in a
degrees less than the temperature within the
Fahr.

of water at the average rate, and thereby it was determined that each cubic foot of water registered at the meter represented 66½ pounds.

CALIBRATION OF BRINE METER.

Referring to the general view, it will be seen that a piece of pipe is connected to the cock *X*, so as to extend over the hogsheads, *Z Z*. This pipe was arranged with elbows, forming a swing joint, so that its outer extremity could be moved over an arc embracing both hogsheads. At the outer extremity of the pipe was a globe valve. Beside the large hogsheads were two or three ordinary sized barrels, over which the extremity of the swing pipe could be brought. The cock *X* being set wide open, brine was allowed to flow into the barrels, while the globe valve was adjusted so that the pressure upon the meter, as shown by the gauge, and the number of strokes made by the meter per minute, was practically the same as when the brine was passing regularly through the machine. The cock *X* was then closed, and the swing pipe adjusted over one of the hogsheads, the globe valve being left undisturbed. As the index of the meter, which could be read to 2 cubic feet, approached a given reading, the cock *X* was instantly set wide open, and the meter began to deliver brine into a hogshead at so nearly the exact rate at which it had been running, that a slight momentary adjustment of the globe valve made the rate and pressure against the meter exactly correspond to average conditions. The meter was allowed to deliver exactly 100 cubic feet into the 2 hogsheads, the swing pipe enabling instantaneous change of delivery from the first hogshead into the second, when the former was filled.

The contents of both hogsheads were then carefully weighed in portions of about 450 lbs., and thereby it was determined that 100 cubic feet, as indicated by the meter, represented 7,394 pounds of brine. The specific gravity of the brine was determined to be 1.17, or a cubic foot should weigh 73 pounds. A cubic foot by the meter was, therefore, about 1⅓ per cent. too great. In the calculations of refrigerating effect a cubic foot has been considered to weigh 73.94 lbs.

MEASUREMENT OF STEAM CONSUMED.

Inasmuch as the work of circulating the brine does not properly belong to the process of producing the refrigerating effect, the measurement of steam consumption was confined to the steam

consumed in coil in generator A, and in driving the ammonia pump. The exhausts of both these parts of the apparatus were run through surface condensers e and f, and collected in the hogsheads g and g_1, whose capacity was determined, by weighing their contents, to be respectively 3,812 and 3,819 pounds; they were alternately filled and emptied to fixed levels, and gave a very satisfactory determination of the steam.

The heat contained in the steam discharged from the coil in A was measured for a period of two hours by metering the condensing water supplied to the surface condenser, weighing the steam discharged, and noting the temperatures at the inlet and exit points. It was thereby determined that each pound contained 271 heat units on leaving the coil. This amount of heat being returned to the main boilers in the regular use of the machine, makes the temperature of feed water 260°, the return pipe to the boilers being about 160 feet in length, and well covered with magnesia.

The exhaust from the ammonia pumps is sent through an exhaust-feed water-heater, which delivers the water to the boilers at 195° Fahr.

The feed water corresponds to about twice the weight of steam sent through the heater, as a large quantity of steam is devoted to cooking purposes.

Assuming that the exhaust from the ammonia pump is able to heat twice its own weight from 60° to 200°, and that it constitutes about one seventh of the entire consumption, it would follow that out of each pound of steam consumed 266 thermal units are returned to the boilers. If, therefore, the boilers evaporated 7½ lbs. of water for each pound of fuel for 200° temperature of feed for ordinary work, using an exhaust heater, then the evaporation for the purpose of operating the refrigerating machine would be 8 lbs. of water per pound of fuel.

If the ordinary evaporation was 9⅓ lbs. then for the use of the refrigerating machine, each pound of fuel would make 10 lbs. of steam.

Steam was conducted to the ref i
feet of 4-inch pipe well covered with
The pressure was throttled at the
45 lbs. As the boilers gave no evidence
assumed that the one per cent. of condens
in the 150-foot pipe is offset by the 20 d s

due to the throttling. The steam used by the generator is therefore regarded as dry steam at the average pressure of the generator.

DISCUSSION.

Prof. De Volson Wood.—I wish to inquire if it is in order to add to papers as if it were a discussion, after the meeting is closed. I ask, because I think I have in my office an item of interest in regard to actual ice-making, that does not affect the discussion of this paper; but inasmuch as this subject is comparatively new I thought that if I found I had actual figures from a machine which had been run several days, giving the coal used, the indicated horse power of the engine, and the amount of ice actually taken out, it might be an item of interest to the subject—not as affecting the paper. Would it be in order to report such if I find I have the figures?

The President.—Entirely so. Written discussion upon any of the papers presented at the meeting is always in order, and always desired from members present who have data, and also from those who are unable to attend the meeting.

Prof. Wood.—Ledoux, in his theoretical work, gives over fifty pounds of ice per horse power per hour. I understood him to say that that was intended to be the actual amount.

Prof. Denton.—Regarding Prof. Wood's point I shall take occasion to consult with him about that statement in Ledoux, because I have gone over that book, I thought, rather carefully, and as I get the figures the fact is that Ledoux's deductions, which were very carefully and sagaciously made, would not give quite as large performance as this machine has given. He does not take into account the work required to pump the ammonia around to the machine. If I did the same, the actual performance of this machine would, I think, be considerably greater than Ledoux's results.

Prof. Wood.—Perhaps Prof. Denton did not understand me on this point. You are quite right in saying that Ledoux does not take account of prejudicial resistances, but after closing his theoretical investigations he made a remark something like this: "Manufacturers allow 25 kilograms of ice per horse power per hour,"*—some such remark as that.

* Ice-making Machines, by M. LEDOUX, Van Nostrand's Science Series, page 106.

ADDED SINCE THE MEETING.

Prof. Denton.—The reference to Ledoux, p. 106, applies to the *ice-melting capacity* of a sulphur-dioxide machine, and the author estimates 4.4 lbs. of coal per horse power. In English units Mr. Ledoux's data amount, therefore, to stating that practical results have been obtained equivalent to 55 lbs. of ice-melting capacity per 4.4 lbs. of coal. By the data reported in this paper the Pontifex machine gave results for this amount of coal equivalent to

$17.1 \times 4.4 = 75.2$ lbs. of ice for 10 lbs. evaporation
and $13.7 \times 4.4 = 60.3$ " " " 8 " "

Ledoux's statements of practical results appear to be a direct quotation of the claims of makers of machines.

CCCLIV.

TOPICAL DISCUSSIONS AND INTERCHANGE OF DATA.

XIXTH MEETING, ERIE, MAY, 1889.

Nos. 354–72 and 354–73.

"What form of self-oiling boxes have you found the best for line and counter shafting? Can you give figures as to the economy of oil as compared with other methods?

"What form of oil-cup or lubricator do you find most economical for use on machines requiring constant lubrication?"

Mr. James Christie.—When properly applied, I have found nothing to give such general satisfaction as the lubricating grease now extensively used. It can be applied either by the spring piston cup or the plain cup, with a copper or brass rod immersed in the grease and touching the shaft. The vibration of this rod carries the lubricant to the bearing as fast as wanted, and runs it down rapidly in the event of overheating. I prefer the latter method over the spring cup for ordinary shafting lubrication; as, when properly made, it requires little attention; whereas the cups require occasional adjustment. I am aware that it is claimed that the coefficient of friction is greater with the viscous grease than for a good fluid oil, and, if so, there may be cases where this is to a degree objectionable; but for ordinary heavy shafting the grease presents advantages of economy, cleanliness, and reliability, that counterbalance any disadvantages. I have recently had it applied to dynamo journals in place of fluid oil, and its advantages in cleanliness and economy are apparent.

For loose pulleys it is unexcelled. By the use of the grease chamber and the perforated sleeve, the loose pulley becomes one of the least troublesome, instead of the nuisance of the shop. I have instances where the loose pulley has been running at high rates of speed for several months without being touched, and even for several years, when I have reason to believe that the original

charge of the lubricant has not been exhausted. It simply sticks to the journal, instead of running off as the fluid oil does.

Prof. Jas. E. Denton.—In regard to Mr. Christie's remarks, it is not proper to let grease go on record as a superior and infallible lubricant in that way. There are many cases where greases have signally failed to lubricate fast-running engines. I know of a case of a 1,500-horse-power Corliss engine, and they tried to use grease on the crank pin. It failed because, when the grease was expected to go down from this copper cup, it would not go down until it was too late. Grease does not handle those cases as well as oil. I have had an instance of a main-shaft bearing in which we tried in vain to run the bearing cool with grease.

Mr. T. F. Hemenway.—It frequently occurs in practice that there is something back of what appears in the mere statement of a single case. Prof. Denton, in the instance he cites, is undoubtedly correct; but in another instance almost like it I had experience with a Wright engine which was overworked, and nothing which was tried, except grease, would keep the crank pin cool for two hours.

Mr. F. A. Scheffler.—I had a somewhat similar experience with grease, and different styles of oil-cups used with grease. I do not wish to advertise any cup; but the one which we have fixed upon as fulfilling our requirements best, I can give the name of to any of the members who would like to know what the cup is. It is one of the piston-style cups, but it is so different in construction from the usual style of piston cups that it can be regulated to feed exactly as closely as an oil-cup of the ordinary style can be made to feed. I have found that the piston cups, when grease is used, will invariably, when the crank pin gets warm, squeeze all the grease out at once, instead of getting the benefit of it for any length of time; while with this cup we have run a high-speed engine,—the one I speak of more particularly now—making 260 revolutions a minute for ten hours a day, for three weeks, with two ounces of grease on the crank pin. You can get the feed adjusted so very closely that we have found it to be the most economical.

Mr. W. W. Sprague.—I have used grease a number of years, but I found it always desirable to prepare the bearings with large recesses, and found a great saving over the use of oil. In the shop of which I now have charge we use a kind of hard grease in the form of a candle varying in size from one-half to seven-eighths of an inch in diameter, and about three inches long. The cups

are straight, a trifle longer than the candle, and a small weight rests on the candle, with a wire attached which projects through the top of cup, indicating the wear of the candle. The hanger cap is prepared by drilling a hole the size of the cup. We find them cheap and clean. The candles will last three or four weeks, or more.

Mr. A. L. Ide.—About five years ago, in introducing high-speed engines, I attempted to use those grease-cups on the crank pin of high-speed engines, also on the main bearings. I found they would run with fair satisfaction on the main bearings, but they proved a failure on the crank pins. After running perhaps for an hour, the pin would begin to warm up, and the temperature would increase rapidly and melt the grease all out, instead of melting a little at a time. On this account we would have to shut down and refill very often. I have used it on dynamo bearings in some cases with very good results, apparently giving good satisfaction. In other cases I have tried the grease where the dynamo bearing was running perfectly cold and satisfactorily with oil, and it would run warm with grease, even when a compression cup was used, so that it would squeeze all the grease out within an hour, and still the bearing would run warm. My experience is that it is not suitable for high-speed engines, but I consider it desirable for shafting in some cases. It is more cleanly than oil. Referring to candles, my attention was called to their use about a year ago by a company in Chicago having them in use. They pointed out a shaft which had been running for nine months with those candles. They said that they had not replaced the candles or touched them. The candle is inserted in a tin tube with a lead weight on top of it, and a wire sticks up so as to show when it feeds down. You can always tell at a glance how much your candle has worn. The weight presses the lubricant on the shaft, and the shaft, revolving, gradually wears the lubricant away. They claim that the temperature does not increase perceptibly. In putting in some shafting six months ago I applied these candles. They have been running ever since satisfactorily, and none have been replaced. We oiled the shaft the first two or three days. It has been running now about six months without replacing any of the candles, and without the application of any oil. We have not had a warm bearing on the line shaft; it is about one hundred feet long. To all persons who have used them they seem to be giving satisfaction in that class of machinery. I do not know of cases where they have been tried on high-speed shafting or engine bearings. I should doubt their suitableness for engine bearings.

Mr. Wm. Hardwick.—I would say, in reference to the candle system of lubrication, that I have used it in my shops for nearly two years, and it is the most satisfactory arrangement I have yet found. One of these small candles will last on a shaft two and a half to three inches in diameter, for five or six months.

Mr. Scott A. Smith.—I have had considerable experience in the use of grease. When grease was first introduced we used to use a cup without a copper rod. That always involved having the lower extremity of the oil-cup within an eighth of an inch, at least, of the shaft, to take advantage of what you might call the indrawing effect from the rotary motion of the shaft. If the oil-cup was set higher up, it did not seem to work very well; it was also necessary, as a rule, to smear the shaft to commence with. Finding that many people would not give that close attention to the matter which was necessary, the copper rod was adopted, and, with that agitating the grease, the feed would take place satisfactorily in most cases. With reference to what Professor Denton says about the failure of grease to keep a crank pin cool, you can apply a grease-cup and get no effect from it; and then if you apply it correctly you will get an effect. I have seen grease-cups put on the crank pins of a great many engines, and they have worked with great satisfaction. In other cases engineers have put them on and thrown them off immediately. So it very largely depends upon understanding the proper way to apply grease. There are different consistencies of grease, and, their use being comparatively a new method of lubrication, a good many difficulties arise from inexperience. As to the question of economy, there is no doubt but that in the generality of cases grease is much more economical than oil, and in case of fast-running machinery, like dynamo engines, if applied, and successfully applied, you get rid of the oil which seems to fill the air and cover the belts with a film. I have been in electric light stations where the engineers have said that the whole room was full of oil which was thrown off in a finely divided state from the crank pins and other rotative parts.

Mr. S. J. McFarren.—I would like to ask Mr. Hardwick at what speeds those shafts were running?

Mr. Hardwick.—I have tried it at 175 revolutions, but never at higher speeds.

Mr. John H. Cooper.—If any one will use cheap and inferior grease, and apply it in the usual careless way, he will not have

much of a success with viscous lubricants; and, on the other hand, a trial of oils, properly used,—especially such as are furnished in sample by persistent venders of the same,—will readily convert him from the use of grease to the exclusive use of oil.

Much, however, can be said for both.

The wise engineer will look well to the kind of lubricators he is using, and how they are used, and to the oil ways from the lubricators to the places where lubrication is most wanted.

A grease of good quality, which will not melt below 180° F. and will not freeze, is one that may be used anywhere. It should contain no acid or pitch, and of course should be free from gritty matters: it should not be liable to clog its ways or gum on the wearing parts. It will not melt or drop from the places of its use, and will therefore not smear floor, fabrics, or belts to their detriment, but "stay put" and do lubricating all the time.

It can be applied to bearings at any angle, and is forced upon wearing surfaces by a collapsing, adjustable closed cup. It adheres to bearings, and does not run to waste when machinery is standing idle. Such a lubricant is on the market and can be purchased. There are parties using it who say it perfectly solves the problem of lubrication. The quality of any lubricant and the administration of it are the important elements of the problem.

Mr. E. F. C. Davis.—A short time ago Mr. Mattes sent me some cups to try. I think they are probably the same cups of which Mr. Scheffler speaks. He sent me two cups and a bucket of grease. I put one of those cups on a crank pin that had been running warm. We put in one of the cups which held four ounces. At first it did not run very well. After the grease replaced the oil, and after it had been on for about a week or two, they were able to make this cup last for forty-five to forty-eight hours, whereas the oil-cups had to be refilled four or five times a day. In another case it was applied to crank pins on 30″ by 72″ engines. One of them had been renewed, and was possibly a little out of line, and it gave us considerable trouble. We had to have a stream of oil on it all the time. Whereas in the first place it had to be filled several times in rapid succession, at last accounts it had been running twenty-five hours with one filling. The intention was to get the feed adjusted so fine that the grease would not show about the edges at all, and we did get it to that point in time.

Mr. C. W. Nason.—The general opinion expressed here to-day seems to be in favor of the use of grease. I would like to ask if

any of the members have made experiments to know approximately what the increased friction is over the use of oil in the use of it.

Mr. H. R. Towne.—The comments thus far have touched only, apparently, on one side of the economic question, in which the cost of the lubricant appears as the greater factor. But, of course, that does not cover the whole ground. The loss by friction is a material point in many cases, and it would be well to recall, in that connection, a discussion of the same kind which took place at one of our meetings two or three years ago, in which the fact was brought out that under average conditions of machine-shop practice the constant friction of belting and shafting was approximately fifty per cent. of the total engine power. Now, obviously, anything that would seriously affect the friction of line shafting might become a somewhat expensive luxury, and much more than compensate for some economy in the cost of the lubricant. If any one familiar with this subject has any knowledge of the difference in the frictional resistance of shafting using the two lubricants, it would be very interesting indeed. I believe that was the point of your question, Mr. Nason?

Mr. Nason.—Yes, sir. Obviously, in a large cotton mill, or any place where there is a considerable amount of shafting, the coal question would come in very considerably. It might be more than the cost of sending a boy up to oil the shafting when necessary.

Mr. T. T. Hemenway.—In the instance of any journal turning in a box would it not follow that the lubricant by the use of which the parts—the journal and box—were kept the coolest would be the one that caused the least friction? Of course I do not refer to instances—as in the use of water—where the lubricant carries away the heat.

The President.—It probably would be true in that case. The question applies rather to long shafting.

Mr. Hemenway.—It does not, in the discussion, seem to have been brought out that either oil or grease was best; but if one will keep a journal cool and the other will not, then we may safely assume that in the case of the hot journal more power is being wasted in friction.

The President.—I think the conditions existing in the two are so different and so variable in the crank shaft, that the deduction from one would not be applicable to the other.

Mr. Hemenway.—I fail to see the distinction. Heat at the journals is an exponent of the work done in turning the shaft or

pin. This work would appear as heat, no matter what the speed of the shaft might be, and no matter whether light oil, heavy oil, grease, or no oil at all, was used.

Prof. J. E. Denton.—Mr. Hemenway has in mind simply the friction due to the greater viscosity of the oil. That will never make any such heating as causes trouble. I put a very thick oil on a locomotive crank pin in the place of a thin oil, and we could always find that pin warmer from the greater viscosity of the oil. But it was nothing in the shape of heating to cause trouble. In all these cases of heating—and I have traced a great many of them through the records of others in the last two years—I doubt if there is a single case in which you can say that there was not a change in the mechanical conditions, causing excessive heating. We have no data, I believe, of the power required to run a grease as compared with an oil, under the exact conditions of practice. It has been tried by Mr. Woodbury on his testing machine, and by Prof. Thurston, and they record that with perfect journals grease has considerably more friction than oil. But it does not follow that that will be the case with restricted feed, such as is met in the cups mentioned in discussion.

Mr. S. J. Macfarren.—I would ask one of these gentlemen whether they think that any of the effects they have observed are due to any admixtures in the grease—such as graphite, for instance. It can easily be seen that grease would make a better vehicle for the conveyance of graphite than oil. That might account for some of the difference in the experience that has been related.

Mr. Ezra Fawcett.—The question under discussion is similar to one which we are frequently asked: Which is the best, this or that machine? While all may have some good points, none are perfection.

I have the pleasure of presenting to this society, for inspection, a form of self-oiling box, with oil reservoir below the bearing proper, with large holes through the same, containing the wick or waste in contact with the shaft, and extending down into the oil reservoir, with channels at the ends and sides of box, to return the oil wiped off the shaft.

A pair of this size in use for a circular-saw mandrel in our pattern shop, and a full set of a larger size for a line shaft in the machine shop, have been in ordinary constant use nearly twenty years. We usually fill the oil reservoir once in six months, using about one-third of a pint of oil.

As a test, one box on the line shaft was in use fourteen months, with one filling. On examining it we found the reservoir empty, but the shaft was moist with a film of oil, and had developed no signs of heating or cutting.

As to economy of oil compared with the usual wasteful way of daily oiling by a careless attendant, the saving is not less than seventy-five per cent. for this class of self-oiling boxes, for line and counter shafts.

Mr. S. J. Macfarren.—In reference to this box I would like to say that one of the best street-car gears that I know of is of the suspension type. The car is suspended on links which ride on the top of the journal, and there is the usual reservoir like that just shown—with a wick which runs under the whole length of the journal, and in contact therewith, giving excellent results. It has been used now for many years. It is used in Chicago on the cable roads, where the speed is high and service excessive. It is like this shown here, in that the maker guarantees one oiling to last six months. It is practically the same as this wick in principle. The wick just rises up out of the oil, and carries up oil, and wipes it off also. In other words, it gives just enough oil. There is a good dust collar used in connection with it. They use Jones and Laughlin's cold rolled shafting with this gear, and it gives the best service, and keeps the oil the best of anything I know of.

Mr. W. S. Doran.—If this subject can be construed as covering cylinder lubrication, I would like to ask the members what experience they have had in oiling cylinders and valves of engines carrying steam up to about 150 or 160 pounds; what experience they have had with oil; and the effect the oiling has had, and if they could get a good lubrication with ordinary cylinder oil?

Prof. Denton.—Although I have not had a personal experience in the matter, yet from the results reported to me from engines on the lake service there has been no difficulty in lubricating up to that pressure with all the leading oils in the market. They are all doing that work, and all having fair success. Whenever there has been any difficulty, it has been traced to a little lag of the rate of feed.

Mr. Doran.—I had a case in mind of a steamer which has made five round trips across the Atlantic, and has not used a drop of cylinder oil on those trips, carrying steam 150 pounds; and the experience has been that the less cylinder oil they use on those steamers the better they get along.

The President.—Do I understand they use no lubricant of any kind?

Mr. Doran.—They do not use a pint of cylinder oil.

The President.—They use no lubricant whatever?

Mr. Doran.—No, sir. It is the steamship "Ohio," of the American Line.

No. 354–74.

Does it prevent nuts from working loose, or prevent breakage of bolts, or reduce their cross-section between the head and the nut?

Prof. John E. Sweet.—While at the Sibley College Machine Shop several years ago, we found the bolts for holding the tool in the tool-post of the planer breaking with discouraging frequency. I adopted the plan of turning the body of the bolts down to nearly the bottom of the threads and stopped the breakage. I found three or four tool-steel bolts among the old iron, fitted the heads to the planer-table slots, turned the body down to near the bottom of the thread, and at the end of six and a half years we still had two of the originals left, during which time probably 50 or 100 iron ones had been used up.

In our engine work, where there is no reason why the bolt should not be smaller than the hole, we turn down the body of the bolt (or intend to); and when it is necessary that the bolt should fill, we weaken the body by drilling a hole down the center to nearly where the thread commences, one-half the diameter of the bolt. Such bolts will not break as soon as solid ones, nor will the nuts shake loose. The theory and probably the explanation is that the bolt is made as weak throughout its whole length as at the bottom of the thread, and the elasticity of a piece of metal of some length is enough to do what is accomplished with an elastic washer, preventing the nuts from working loose. Why the bolts break less is no doubt for the same reason that a two-inch bar, scored down to one inch in diameter, will break easier than an inch bar, and the bottom of a *V* thread is the worst kind of a score. As a matter of history (of interest to the younger members at least) it may be stated that this reducing the body of the bolt originated with Pallisser, the inventor of a special form of projectile.

About the time of the late war it was found that the men behind the armor of a vessel found the greatest danger from the flying nuts when the side of the vessel was struck by a shot. Shields have since been used in the Monitor turrets to catch the nuts, and

Pallisser prevented the bolts breaking by reducing their diameter. This left the bolts loose in the holes, and Parsons improved the plan by fluting the bolts like a four-fluted tap. For finished work the plan adopted by Stroudley, M.M. of the London & S. E. Railway,—that of drilling a hole down the center,—is the least objectionable, and likely the cheapest.

Prof. J. E. Denton.—I never heard of this interesting phenomenon until now. The principle involved is, I think, that by turning down the body of a bolt we induce a finite length to stretch under the sudden strain due to the wrench, and thereby no part of the bolt partakes of as great a strain as comes upon the threaded portion when the body is not reduced. If we conceive the sudden force of the wrench to be foot-pounds of energy, the strain on the metal will be equal to these foot-pounds divided by the lineal yield or stretch of the bolt. When the body is not reduced, the stretch is infinitesimally small, and the quotient is very great—too great to be borne by the metal—at the bottom of the thread.

When the body is reduced, the stretch is considerable, and the quotient or strain sufficiently reduced to fall within the working strength of the threaded portion.

Mr. Albert A. Noye.—I have practiced this principle of reducing the cross-section of bolts between bearings for several years, in the connecting-rods of our engines.

As we have never had occasion to change our standard, and have used no other plan with which we can compare results, our experience may not throw much light on the subject; however, these bolts have never broken, and we have several hundred engines at work. We make them of steel, and use them at both ends of the connecting-rod. They are rather longer than usual for such bolts, and the entire length, from the nut to within a short distance of the head, is turned down to the diameter of the bottom of the thread.

We had one instance in which I think the matter was demonstrated to a certain extent, where the cylinder of a 40-horse power engine running 250 revolutions per minute was suddenly filled with water which came over from a flooded boiler through a very long steam-pipe. The blow was severe enough to strain every part of the engine. The only part which actually broke was the hub of the flywheel. Everything else, from the piston to the shaft, was started or sprung so as to need overhauling.

The bolts of the crank-pin brasses were stretched a good

second of an inch, but showed no other injury. They were used in the engine after the accident, nothing being replaced but the fly-wheel.

Now, I hold that if this stretch had been confined to two or three grooves at the bottom of the threads, it would certainly have pulled the bolts in two, as the bolt would have then had, probably, less than one one-hundredth of the length of material which was available, and into which the effect of the strain could have been distributed.

I think such bolts, even if no stronger, are very much safer against sudden and excessive strains and against the loosening of nuts.

Mr. C. S. Dutton.—I never heard but one side to this question. It is a point that has been believed a long time in bridge work. It is well known that nearly all round bridge bolts are up-set at the ends to receive the thread. Of course there is another and more potent reason in that case, and that is, that it is cheaper to make them that way. It is also well recognized by bridge engineers, at the same time, that it is a better way to make them, and that there is less liability, on a sudden jar, of breaking the bolts.

Prof. Wood.—As bearing upon the subject, and yet not exactly in line with it, a case of this kind came to my knowledge some years since, as a practice that was adopted in Mr. Metcalf's steel works in Pittsburg. Fig. 206 represents the piston rod of a steam hammer. The piston rod was tapered and driven in forcibly into the head. The piston rods break in all such machines sooner or later, and sometimes the man who had them in charge found it difficult to get the piece out of the head after the rod broke, especially when it broke just within the block constituting the hammer-head, as it raised a burr at that point; so, in his wrath, he said, "I will fix you this time." He ordered the next piston-rod turned down so as to make it considerably smaller above the head, and saying to himself, "Now I have you; when you break you will break at the smallest place;" and, much to his surprise, he prolonged the life of that piston rod to three or four times the life of former ones. He made an improvement by giving some elasticity to the rod just above the head. I supposed, when I talked with Mr. Metcalf at

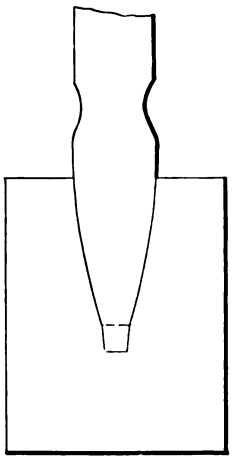

Fig. 206.

:ime, that the thing was fixed so that it would always break at mallest place. Some years after I learned from him that they d not always break there, that they would sometimes break to the head, but that the life was prolonged. Whether the e is still continued or not I cannot say. But the point bear- ıpon this is, that where there has been a shock, as has been red to by some of the preceding speakers, if we can provide city at some suitable point, or distribute it uni- ly over the full length of the bolt or rod, we ›rolong the life as well as secure the safety of the that are put on the rods. In a machine of my tion I found that long bolts were vastly more ›le than short ones, and I attributed it to the hat the stress was more uniformly distributed a longer space.

FIG. 201

·. *G. E. Whitehead.*—Some time ago I had le with milling arbors breaking at the shoulders. cause I attributed to the breaking strain being ntrated at that point. We cut a circular channel ›ehind the shoulder (as per Fig. 201), making .iameter there about equal to the diameter of ·bor, and none have broken since.

·. *C. J. H. Woodbury.*—This introduction, into ign, of a place where elasticity can be made ıble, is, of course, as every one knows, used by wheelwright in making a carriage wheel— the spokes down near the hub. There have a great many places where the tendency to ıre by the concentration of a strain has been ›d by the use of a fillet. As, for instance, in a n well-known steam pump, there were a great breakages at the place of the change of diam- ›f cylinders, especially when water got into :eam end of the pump; and by the mere intro- ›n of a fillet at that point, that class of accidents has ceased to

No. 354–75.

·e you successfully soldered aluminium? Can aluminium be welded by :ity?

·. *C. J H. Woodbury.*—I have never tried to solder aluminium, ıy experience with aluminium bronze has been that it was not

possible to solder it, except by depositing a thin film of copper on the surface, by placing the object to be soldered, with a bar of copper, into a bath of sulphate of copper.

I have never made any measured tests of the strength of such joints. It does not appear as if the strength of such joints was equal to that of other alloys soldered together, as its tenacity is entirely due to the electro-deposition of copper, and it is well known that the adhesion of electro-depositions is not very firm.

The electric welding process has been used to weld aluminium, and I have received this letter from Prof. Elihu Thomson, in answer to an inquiry requesting information in regard to their latest experience in the matter:

"We have frequently welded aluminium by electricity, although of course it requires specially skillful handling."

"In regard to soldering aluminium I do not know that I have tried it except in the ordinary ways, and then without success.

"In regard to soldering aluminium bronze, I have never tried to solder it, but presume that it partakes of the character of the aluminium itself. We have welded aluminium bronze successfully.

"The difficulty of soldering and welding this metal and its alloys seems to be due to the formation on the exterior of the metal of a skin or coating of anhydrous alumina, perhaps even at ordinary temperatures in the air, but so thin as to have very little effect on the color and luster of the metal. Such a coating would easily form when the metal is heated, as at a red heat the metal oxidized very easily and rapidly.

"The difficulty seems to be that there is no convenient flux for the solution or removal of this coating, as the flux has to melt or be fluid below the melting-point of the metal itself. No doubt borax, if the metal were able to stand the high temperature needed to make borax perfectly fluid, would be an efficient flux, but this temperature it does not stand, fusing much below it. There is a decided need of a good flux which melts just below a red heat, and is able to dissolve the oxides of aluminium as well as of other metals. I have found similar difficulties existing in regard to the metal magnesium, whose anhydrous oxide magnesia is apparently very difficult to deal with, and the melting point of the metal is too low to allow the use of high temperature fluxes."

No. 354–76.

Have you any experience in hardening machinery steel, or in case-hardening it?

Mr. James Christie.—Steel of low grade which possesses no positive inherent hardening properties can be superficially hardened in the same manner as wrought iron, by the usual case-hardening processes. Our men do this constantly with satisfactory results. The increasing use of the cheap steels in the mechanic arts renders it desirable that the hardening properties of the various grades should be clearly understood by the workmen, and save much confusion which now frequently results from the use of unsuitable grades for particular purposes. A reliable classification, with a ready means of determining the hardening properties of various grades, would be very useful.

In a general sense the hardening properties of the steels correspond to their tensile strength. Thus, tool steels run from 120,000 to 160,000 lbs. per square inch. Steel of 100,000 lbs. tensile strength hardens moderately, but not sufficiently to make reliable metal-cutting tools; with a strength of 70,000 to 80,000 lbs. the steel usually hardens sufficiently to crack with little or no bending before fracture, but is too soft to cut iron successfully. The steels of extreme low tension—viz.: 50,000 to 60,000 lbs. per sq. inch—can usually be doubled flat without fracture; even after chilling in the coldest water, their slightly increased hardness is discovered only by more refined tests. Can any member give his experience in tempering, or reducing extreme hardness, by means of the oil bath and thermometer? What kinds of oil are best for the purpose? What degrees of temperature of the bath correspond to the hardness determined by the usual color test?

No. 354–77.

Have you tried the plan of applying electro-motors to mechanical operations requiring not more than ten horse-powers? Can you compare their convenience and economy with those of small engines or the usual transmissions by belting and shafting?

Mr. James Christie.—We have recently
coyd Iron Works a gang of eight radial d ls,
try, or traveling frame, of twenty feet s w
the work to be drilled, and travels the leng p
feet. Holes of 1¼″ diameter, and less,

steel girders. The power to be transmitted was estimated at 6 H. P. No mechanical attachments could be made either above or below, as the floor had to be kept clear for the reception of work, and the roof chords sustained a series of trolleys which crossed the path of the drill gantry at intervals of fourteen feet. Evidently the machine must either be locomotive,—that is, carry its own power generator,—or else the electric system, by moving contact, be used. A Thomson-Houston continuous current motor, of 110 volts and 68 ampères of current,—say nominal 10 H. P.,—was placed on top of the gantry, and connected, by a suitable system of belts and gearing, to the drills. The electric generator is driven from the line shafting near the middle of the shop. The current is conveyed through copper strips suspended between the chords of the roof trusses, leaving gaps of several inches at every truss, through which the cross trolleys run. The motor carries a set of brushes, which pick up the current from these copper strips, and so arranged as properly to bridge over the gaps at the truss points without breaking the electric circuit. The machine has been operated day and night for several months, with satisfaction, nor is there any palpable evidence of undue loss of energy in the transmission.

When it is equally convenient to transmit power by the ordinary means, there is no advantage in the electric motor, and the cost of application is much more than other methods would require. But when the power has to be transmitted to a considerable distance from the generator, and especially if the motor has to be portable, the electric system has manifold advantages. The motors as now made by leading manufacturers are in good mechanical form, and are serviceable machines. The brushes and commutators of the continuous current motors require a little care, but otherwise the machines need but little attention.

Mr. C. J. H. Woodbury.—I was engaged in putting an electric plant in the Massachusetts General Hospital during this last fall, and it was necessary that the patients should not be disturbed by noise. I at first proposed to operate the electric lights, after half past seven o'clock at night, by means of a storage battery, but I could not get any satisfactory guaranty on the part of either of the companies manufacturing storage batteries, and abandoned that idea. Thinking that I could run a small dynamo in the building by means of a current from one of the lighting stations in Boston, I found that we could apply a ten-horse-power motor, operated by

what is called an arc current, which would require an initial expenditure of $900, and after it was installed, for power from five o'clock at night until half past seven in the morning, at maximum time, the electric-light company asked $1,200 a year. That price was absolutely prohibitory in this case, so that I was forced to use other means. I finally arranged my foundations so that my engines were entirely noiseless, with an expenditure of less than $100.

Electric motors are used to distribute power in one of the factories of the United States Company at Newark, the generators being in the basement, wires running in a brick flue on the outside of the building, and conductors running to the motors in each room. Some of the motors are placed upon shelves projecting from the wall, and right at the end of the main shafting, and other motors are on the floor, and belted up to the main shafting. The apparatus appears to work very satisfactorily.

Another company—the Sprague Electric Company—have been engaged in making some estimates for the cost of electrical distribution of power, in place of the usual method of transmission by belts, although nothing of the kind has yet been put in practice as far as I have heard.

In connection with this point, this latter company has a very ingenious method of attaching a motor to the main shafting, and that is by swinging the motor upon a yoke whose bearings are concentric with the shafting which it drives. You will remember that an electric motor must run very fast, much faster than an ordinary shaft is expected to run. By hanging the motor below the shaft in the yoke, the small driving pinion of the armature of the motor engaging in a larger gear from the shaft, the motor pinion always is in gear with the follower on the shaft. When the motor is starting, it will tend to come up around the shaft and gear to a horizontal position; and getting a greater leverage, and after it has once got the machinery in motion, it will stay at some position of equilibrium comparable to the pendulum in a Thurston oil-testing machine. Knowing the center of gravity of the mass, and its weight, and the velocity of the revolution, you have there a means for a continuous indication of the amount of power generated by the motor.

The cost of these electric motors is so high as to be in many cases prohibitory. I was engaged this last week upon a matter in which a cotton mill owning a water power about three miles up the river thought that it would be a very desirable thing to transmit

that power by electricity, and built a corresponding addition to the mill. I found that the expense for generators, wires, and motors for transmitting 100 horse power three miles was $17,000. I was afterwards told that that was subject to a slight discount, but at all events anywhere near $170 per horse power is a prohibitory price.

Mr. S. J. Macfarren.—My experience electrically has been in connection with the first branch of this question, viz., the distribution of small powers, for street-car use principally, but also as substitutes for steam engines and water motors in small industrial establishments, and for use on elevators and a great variety of things of that sort, where electricity can be used with advantage. And it may be well to note here that there is a popular fallacy regarding electricity, by which it is claimed as a *prime mover.* I have seen articles in daily papers in which electricity has been spoken of as a rival of steam; the fact of the matter being that electricity is simply a wonderfully adaptable and elastic way of *transmitting* power; and corresponding, in the present state of the art, to the shaft-belt or wire-rope transmission. And it has this peculiar advantage in the distribution from central power stations—a modern steam plant in charge of the high order of skill now available is capable of producing power with a consumption of fuel which is only a fraction in comparison with what is used and wasted in small engines such as are used in small workshops, and for the purposes which I indicated a moment ago. That saving comes in so as in round numbers to more than compensate for all the losses in transmission by leakage and otherwise. More than that, the opportunity which some electric light companies are taking advantage of, to supply small motive powers, gives electricity another advantage. The service for which the motors are introduced is only for a very small number of hours per day. There are many cases such as elevators, small workshops, and where different operations are carried on in small industrial establishments, where the total hours of work are less than one half, and others where the average, we will say, is about one half, of the day. With the steam engine, steam has to be kept up. There has to be an attendant, and the wages of the attendant, in the case of a three, four, five horse power or other small engine, may be greater than the fuel bill. The result is that a power station with the capacity of 100 horse power can and does produce and collect for 200 commercial horse power. That is to say, it rents out to parties nominally using 200 horse power, and collects for it, and furnishes the power entirely satisfactorily. As to

convenience, and all that, of course electricity has no rival. You do not need to take any floor space unless you want to, and there is no dirt made. There is no annoyance of any kind or sort. In the case of street car service, which is peculiarly trying, it has the advantage of keeping the power at the central station until it is called for. In other words, the reserve power which on a locomotive has to be carried *on the wheels* to the curve or grade, in the case of electricity remains at the *central station* until telegraphed for. In workshops there are many cases where two to five horse power are used, where the motor is shut down when the machinery is not running; and the convenience, and cleanliness, and saving in these indirect ways are such that the use of small electric motors is becoming more and more common. The motor manufacturers are doing an enormous business and some of the electric-light companies are making a specialty of it and find it more profitable than their light business.

Mr. Chas. H. Parker.—In building a chimney for the new electric light station in the city of Cambridge, some of the members of the committee thought it would be a pleasant thing to illustrate the practical application of electricity as a motive power, by lifting all the bricks and mortar by electricity; and I was called upon to make the hoisting drum which should be driven by a belt from the motor, the drum having a friction connection with, and loose on, the shaft, which was continually rotating. The friction was in contact only when the load was hoisted. The drum was held at rest or lowered by a foot brake. The Thomson-Houston Company at that time either did not have the electric motor in the market as a salable article, or, if so, it was not used; but an old dynamo that was made by the Weston Electric Company of New Jersey, I think, was used. I am not familiar with the theory of electrical matters enough to know what they did to use it, but it was merely explained to me that they reversed the current in some way, and made the dynamo run backward. But, at any rate, from the main station through that dynamo the power was derived to run this hoisting machine; and while there is no means of knowing the actual cost, it certainly was a very convenient arrangement, and handled all the brick in the chimney, which was 150 feet high, and did it without any accident, and was found fully as reliable as any motor that was ever used for that purpose.

Mr. T. Spencer Miller.—There is just one point which I want to make in regard to this matter, and that is in reference to the waste

of power. I believe there is no electrician who claims more than seventy per cent. efficiency in electric motors, ten per cent. being lost at dynamo, ten per cent. in the wire conductors, and ten per cent. in re-converting at the motor. Motors run at very high speed, and for ordinary use the speed must be reduced by gearing of some sort, causing a further waste of power. Something like a year or so ago I came in direct competition with electric motor agents in a problem of transmitting power for running a number of machines in the freight warehouse of the Union Steamboat Company in Chicago. The problem there was as follows: The building has one story and basement, and is about 350 feet long by 150 feet wide. *Seven* elevators were located at different parts of this building, requiring from three to five horse power each, and also a 100-light Edison dynamo. The building was an old one, on a very poor foundation, and the shifting of the freight to different parts of the building of course warped the floor in a fearful manner, making it impracticable to use line shafting. Shafting would have to be underneath the floor, and would have been out of line all the time. The loss of power in shafting and belting, if it were used there, would probably have exceeded fifty per cent. of the amount of power used, perhaps even sixty or seventy per cent. I designed for them, and finally adopted, a manilla-rope transmission, using about 1,000 feet of one-inch rope running at 1,600 feet a minute, and applied very much as a cable in the cable railway system. Some sixteen or eighteen wheels were necessary in turning various corners and leaving power at the different points. This system has been working now with perfect success. By taking indicator diagrams we found, with the full load, the engine indicated thirty-three horse power. The manilla-rope transmission, and the various counter-shafts which had to be run in connection with it, took about six and one-half horse power, or about twenty per cent. loss, or eighty per cent. efficiency. I believe that this is the most efficient plan of transmission that could be applied under these conditions, and is ten per cent. to twenty per cent. more efficient than electric motors, to say nothing of the first cost, which would have been many times greater by the adoption of electricity.

Mr. Macfarren.—I wish it understood that my remarks were confined to transmissions of small powers, and distribution from central power stations. Of course the gentleman's figures on manilla-rope transmission do not affect my argument at all. But he surprises me a little as to the small percentage of loss. In

street-car service the case is different. Mr. Holmes, in Chicago, who is the pioneer, in the East, of railway cable transmission, acknowledges that it takes seventy-four per cent. of his total power to move a cable. Out of one hundred horse powers that he uses altogether, he only gets twenty-six horse power on his cars, so that, when you come to long distances, cable distribution does not show up as nicely as the gentleman has stated.

Mr. Henry R. Towne.—One application of the electric motor is pertinent. The Yale and Towne Manufacturing Company has built a transfer table for the Pennsylvania Railroad, operated by an electric motor. It is substantially a traveling crane on the ground. The operation of the machine is satisfactory in all respects. The first cost of electric motors is at present prohibitory for many purposes; for example, in crane work. It would be a very desirable thing, indeed, if we could use a small motor for each of the two or three functions of a crane; but in a recent case which I investigated, the cost of three motors for such a purpose, each of them approximating about ten horse-power, would have mounted to almost exactly the sum total of the cost of the crane itself, and the mechanism which they would have displaced would have been comparatively trifling in amount. So that at the present time, while the electric motor is exceedingly clean and convenient and useful, its first cost is certainly so great as to preclude its use for many purposes, where economy of first cost is essential.

The use of hemp rope, which has been referred to, is hardly comparable with the cable railway traction. In the latter case the distances are enormous as compared with the former. The weight of the rope itself, and the friction and resistance of the numerous sheaves and curves, is undoubtedly disproportionate to anything occurring in ordinary hemp-rope transmission in factories. The latter transmission is very economical, and is used almost exclusively in England, now,—much more largely for heavy transmission than leather belting.

No. 354–78.

Is it right or wrong in theory to put a central support under the bed of engines of the Corliss type? Do you know of any bad results from its use, or from its absence?

Mr. H. H. Suplee.—I think it possible the question has something to do with the address of Prof. Sweet, delivered at the Franklin Institute, at which he advocated three-point supports for

all machinery, claiming that the fourth leg was like the fourth leg of a tipping table. He made the statement that the only use for this support was to keep the foundation from coming up.

Mr. Scott A. Smith.—I speak on this subject from the fact of my intimate contact with Mr. Corliss, from 1850 to 1863. I know that he did not consider that there was involved the gain of any advantage in mechanical or scientific principles of construction, by the omission of a support under his girder bed. To know a man thoroughly is to be largely qualified to understand his reasons why in mechanical construction. While Mr. Corliss surrounded himself with the most skillful workmen, and rigidly insisted on the best work, yet he was pervaded with an intuitive desire for economy in the use of material, and for facility in construction. At the time of his invention of the girder bed a prevailing idea with him was to have both the bed, and the main, or crank, bearing, so made that they could be used from the same pattern,—same castings,—for either a right or left hand engine. He repelled the idea of having spotting pieces, which would show as a deformity, on the top side of the guides and elsewhere. These are some of the reasons which led him to omit a central support. Since 1858, when he first introduced the girder bed, Mr. Corliss did build some engines with a central support, and for the reason, as I believe, that he appreciated the necessity for the same, growing out of the fact of constantly increasing number of revolutions, and higher and higher initial pressures.

Mr. C. S. Dutton.—I suppose this matter all comes from the question whether the bed is made strong enough, or whether it is not. There is no trouble about carrying the weight; that is easily done if the bed is made strong enough. In point of fact the Corliss engine was originally designed some thirty-five or more years ago, when comparatively low steam pressures were used. Those engines were designed to use from 40 to 50 pounds boiler pressure, and to cut off about one-fifth stroke, so that the vertical stress which came on the girder was comparatively a small amount. At about half stroke the vertical component of the stress at the crosshead is at a maximum.

At this point, the center of the stroke, of course the inertia does not modify the pressure, as exerted on the piston, to any appreciable extent. And we have practically one-third of the pressure on the piston at this point converted into vertical force. If we are cutting off with one-fifth stroke, of course the pressure is reduced

considerably. Unfortunately our engine-users in this country have got into the habit of crowding their engines pretty hard. A great number of users of Corliss engines force them up to one-half cut-off, or farther. In this case we maintain very nearly full boiler pressure up to where the maximum amount of force is converted into vertical stress, so that in using 90 to 100 pounds pressure, and following up to half stroke, we get a very largely increased amount of vertical stress on the guides. This may explain why with some of the older engines it has been found necessary to prop them up in the center. Another thing—I do not know how far the question of the actual amount of stress at this point has been taken into consideration in designing these girders; but from a casual inspection of them I would say that in the larger engines it is altogether probable that the girder has been deepened to correspond with the increased amount of pressure there. In fact, in looking at them, they appear to only deepen about in proportion to the diameter of the cylinder, while the pressure, as you know, increases as the square of the diameter. It seems to me that is about all there is in that question.

Mr. Henry R. Towne.—It would seem to me that the question turns somewhat on the character of the foundation under the engine. In my own experience we are running a Corliss engine having the middle leg. It has been in use for seven or eight years, and we have never had any trouble whatever from an attempt of the leg to elevate itself. I fancy that if the foundation is a thoroughly good one, and no disturbance or settling occurs, the middle leg ought certainly to be not only unobjectionable, but of course would give a further stiffening to the engine frame.

CCCLV.

MEMORIAL NOTICES OF MEMBERS DECEASED DURING THE YEAR.

JAMES BEGGS.

Mr. Beggs was born in the year 1843. In March 3, 1854, he was apprenticed with Danforth, Cooke & Co., at Paterson, N. J., serving two years at boiler making and five and a half years in general machinery and mill-wrighting. He left in 1859, and was for eighteen months at the South Brooklyn Marine Engine Works, on this class of engine, and for the same period on locomotive valve-motions. In 1861 he enlisted in the New Jersey Volunteers, and served until 1864 in the many engagements of his division; and afterwards he served in the drawing-room of the D.. L. and W. Railroad for one year, and two years as general foreman of their shops at Scranton, acting as master mechanic. He was five years engineer in charge of the steam-engine and boiler department of Todd & Rafferty, until 1872, and for two years acted as general superintendent over the 800 men employed in the elevator works of Crane Bros., at Chicago. For the last sixteen years he was in business for himself, constructing silk factories and in general practice of warming and ventilation of buildings, and at the same time carried on a mercantile department in this city. He was also consulting engineer of the Passaic Water Works.

He took his own life in a fit of temporary aberration of mind, on the 19th of July, 1889. He became a member of this society at the New York meeting of 1883.

ALFRED B. COUCH.

Mr. Alfred B. Couch was born May 17, 1829. He entered the shop of McKay & Hoadley in 1847, and from that time until February, 1864, he served as apprentice and journeyman, as foreman seven years, and as draughtsman two years. From 1864 to 1871 he was superintendent and general manager of The New York Steam-Engine Company's Works, in charge of design and con-

struction. In August of that year he became mechanical engineer at the Industrial Works of Wm. B. Bement & Son, in Philadelphia, with whom he remained as designer until the time of his death.

He had made a specialty of machine tools for nearly seventeen years, and at the time of his death was a recognized authority in these lines. He was one of the charter members of this society, joining it in the spring of 1880, and passed away August 2, 1888.

WILLIAM MILLER.

Mr. Miller was born in Dumbartonshire, Scotland, July 21, 1820. He became an apprentice in an iron forge February 15, 1835, and served six years. For twenty-two years after that he worked as journeyman. In 1849 he came to this country, connecting himself with the West Point Iron Foundry, at Cold Spring. He returned to Scotland in 1855, with the idea of permanently locating himself there, and had connected himself with the shipyard of the Dennys, on the Clyde, at Dumbarton. In 1858 he made his beginning at Pittsburg, forming the Duquesne Forge, of which Mr. Miller became sole proprietor in 1864. Mr. Miller had the honor of forging the first armor-plate made in the United States for the U. S. Frigate *Ironsides*. He also forged the first battery of cast-steel cannon, or field-pieces for the army, in that same year.

In 1882 the business was still further enlarged, and a new building put up, when the corporation became known as the Miller Forge Company. He became a member of this society at the Nashville (XVII.) meeting, in May, 1888. He died September 12, 1888.

HARVEY F. GASKILL.

Mr. Gaskill was born January 19, 1845. He is said to have shown unusual capacity as an inventor at a very early age, principally in agricultural machinery. In 1873 he entered the employ of The Holly Manufacturing Company, of Lockport, as draughtsman, and in 1877 became their mechanical engineer and superintendent, which he remained till the time of his death. He designed the pump which is known by his name, and is also known as the responsible designer of the standard design of water-works pumping engine put on the market by his company.

He had been made a vice-president of the company in 1885. The "automatic cut-off gear" of the Holly Pumping Engine, by which the point of cut-off was varied by the pressure in the main, was Mr. Gaskill's invention, as well as a special oil-pumping engine for working against heavy pressure. He became a member of this society at the Pittsburg meeting in 1884. He died April 1st, 1889.

HENRY PAYSON GREGORY.

Mr. H. P. Gregory was born in Plattsburg, N. Y., December 23, 1841. He entered the Rensselaer Polytechnic Institute at Troy, but the war breaking out while he was still a student, he entered the navy in the engineer corps in 1861, taking the position of third assistant. In 1863 he was promoted to second assistant, and served on the gunboats *Chippewa*, *Vicksburg*, and *Shamrock*. He continued in active service until his resignation, April 27, 1865.

Soon after the war he removed to San Francisco, Cal., and established himself in the machinery business. This he gradually extended until it operated houses in Portland, Ore., and in Sydney and Melbourne, Australia.

He was elected a member at the first regular meeting of the Society. He died at Oakland, Cal., July 25, 1888.

WM. H. SCRANTON.

Mr. Scranton was born on the 13th of January, 1840. He was the oldest son of Mr. George W. Scranton, the founder of the city of Scranton, Pa.

At the death of his father Mr. Scranton moved to Oxford and assisted in founding the Oxford Iron Company, with which he remained as civil and mining engineer until 1878.

He became general manager of the Oxford Iron and Nail Company, and held the position until 1885, when he went to Fall River as general manager of the Fall River Iron Company.

Mr. Scranton was a specialist in magnetic search for iron ores, and his dipping compass is considered one of the best forms manufactured.

He was a member of the Class of '62 of the Rensselaer Polytechnic Institute of Troy, and a charter member of this Society. He died June 19, 1889.

ALEXANDER HAMILTON, JR.

Among the promising and useful men brought to a tragic and untimely end by the Johnstown flood, was Alexander Hamilton, Jr. He was the third son of Alexander Hamilton, who, for thirty-five years, has been rolling-mill manager at Cambria Works. Alex., Jr., was born in January, 1854, in Philadelphia, coming to Johnstown with his parents when less than a year old. His education was a practical one in the shops of the Cambria Company, and he was brought up in the atmosphere of the great Cambria Works almost from earliest childhood. After a common-school education he entered the drawing office, then under the direction of the late George Fritz, and served later in the pattern shop. Naturally gifted with a bright mind, he was largely self-educated, but had the advantage of a two years' special course at La Fayette College. He readily acquired the mathematical knowledge necessary for a designer, and was ingenious in devising and arranging machinery. He was industrious, patient, tenacious of purpose, and was one of the most promising of the many young men in the steel industries.

After his course at La Fayette he returned to Cambria Works as a draughtsman under the late chief engineer, Daniel N. Jones, and later under Mr. Joseph Morgan, Jr. He was appointed chief draughtsman in April, 1884, and filled the position with ability and gradually increasing efficiency as he developed by experience and study. His latest work was the plans of the new Cambria-Bessemer plant, which bears the impress of his skill and thought.

Socially he was a genial, courteous, and honorable gentleman, and by foremen and men in the works, or by his friends in the town, he was equally esteemed. He was last seen alive by one of his neighbors at the upper window of his home about three o'clock on the afternoon of the flood, May 31st. The house at that time was surrounded by an impassable torrent. When the waters of the Conemaugh dam were added to the already enormous flood-height of the stream, the house was entirely swept away, and Alex., his wife and child, perished. After ten weeks' search his body was discovered under a pile of débris a few hundred yards distant from his home. He became a member of the Society in 1886 at the Chicago (XIIIth) meeting.

DANIEL N. JONES.

Mr. Jones was born January 18, 1829, at Merthyr Tydvil, South Wales. He came to this country in 1851, and was employed in New York City as apprentice and journeyman in a brass foundry until 1854. In August of that year he removed to Catasauqua, Pa., where he came under the control of Mr. Hopkin Thomas in the machine shop of the Crane Iron Company. In 1858 he entered the employ of the Cambria Iron Company, and remained with them till the breaking out of the war, when he enlisted, first as orderly sergeant, and second as 2d lieutenant Pennsylvania Volunteers. In 1863 he was appointed aide under General Campbell of the 8th Army Corps, and in 1864 served under Sheridan in the Signal Corps during the operations in the Shenandoah Valley. From 1865 to 1871 he was in charge of the machine shops of the Cambria Iron Company, under the superintendence of Mr. George Fritz, on whose death in 1873 he became chief engineer of the works.

On June 10, 1881, he became general superintendent of the Colorado Coal and Iron Company, located at Pueblo, Col. He designed and built the works of this company, and remained with them as general superintendent till the time of his death, December 10, 1888.

He became a member of the Society at the Hartford meeting in 1881.

CORNELIUS H. DELAMATER.

Cornelius H. Delamater, the only child of William and Eliza Delamater, was born at Rhinebeck, Dutchess County, the 31st of August, 1821.

He came to this city, with his parents, when but three years of age. He received a common-school education, and had neither profession nor trade, but, being studious and very fond of reading, he acquired more than most boys who had only his advantages. At fourteen he left school, and became an errand boy in the hardware store of Schuyler & Swords, where he remained for two years. At sixteen he entered the office of James Cunningham, of the Phœnix Foundry, in West Street, between Laight and Vestry, holding the position of bookkeeper, where his father had already been bookkeeper for several years. Here he made himself so useful, and gained such an insight into the business, that Mr. Cunningham, desiring to retire, offered

the business to Mr. Cornelius H. Delamater and his cousin, Mr. Peter Hogg (who was a practical machinist), which offer was accepted before he (Mr. Delamater) was twenty-one years of age. Commencing the business with very small capital, but many kind friends, they continued in that place for eight years, being very prosperous. Their lease expiring there, they bought the property at the foot of West 13th Street, North River, in 1850, building the large establishment in which they conducted their business until 1856, when Mr. Hogg retired from the firm, and Mr. Delamater remained alone for many years. The place became famous during the late war by the construction of several war vessels, among them the Dictator, the construction of which was carried on under the supervision of Captain Ericsson, who was the inventor of the vessel and machinery.

Mr. Delamater was a very warm personal friend of Captain Ericsson, and aided him, by the use of his works and much of his substance, to carry out most of his inventions. They were close friends until death separated them. They died within two months of each other.

His works were also widely known as the place where the Spanish gunboats (thirty in number) were constructed, they being completed and ready for active service within seven months. He also built the machinery for the *Monitor* of 1862, and his form of propeller, first used for merchant service about this time, is known the world over. He also made the first iron steamboat built in this country.

In later years Mr. Delamater took his son and son-in-law in business with him, and they continued with him during the latter years of his life.

Mr. Delamater was a man of very steady and regular habits, of genial disposition, and warm and lasting friendships. He was truly benevolent, but in such an unostentatious way that his kind deeds were never known except by those who received them.

He was a great reader up to the time of his death, and had a very well stored mind. He was a man of fine physique, one who, it seemed, should have lived to be eighty at least, but he was carried off by a very short sickness of pneumonia, which terminated in eight days. He died on the 7th of February, 1889, aged sixty-seven years and five months.

Mr. Delamater married in early life Ruth O. Caller, of

Poughkeepsie, who, with six children—five daughters and one son—survives him.

He was one of the original members of the Society.

HENRY PARSONS.

Mr. Parsons was born May 12th, 1833. He served a regular apprenticeship at the machine business, at the works of William Inslee, and served for eighteen months in the drawing room. He acted as foreman for four years, and was in active business partnership in the machine business for twenty-three years. At the time of his death he was general superintendent for the Watts Campbell Co., with whom he had served for twenty-nine years. He died of diabetes, on the 20th of June, 1889. He became a member of this Society at its formation in 1880.

WILLIAM RICHARD JONES.

As a result of injuries received on the night of September 26th, 1889, caused by the bursting of Blast Furnace C. at the Edgar Thomson Steel Works of Carnegie Bros. & Co., Limited, at Bessemer, Pa., Captain William R. Jones died on Saturday night, September 29, 1889.

William Richard Jones was born in Luzerne Co., Pa., February 23d, 1839. His father was Rev. John G. Jones, who, with his wife and two children, emigrated from Wales to America in 1832.

Owing to his father's ill-health he was compelled to commence work when young, and hence was deprived of any but the most limited early educational advantages. At the age of ten he was apprenticed to the Crane Iron Company of Catasauqua, Pa., in the Foundry Department; and later placed in the Machine Shop of that Company. At the age of sixteen he had made such progress that he was receiving the full wages of a regular journeyman machinist.

About this time he entered the employment of William Millens in his Machine Shop at Janesville, Luzerne Co., Pa. In 1856 he removed to Philadelphia, and worked at his trade as a machinist in the shops of Messrs. I. P. Morris & Co.

The panic of 1857 deprived him of work, and compelled him to endure many privations. In the search for work he reached Tyrone, Pa., where he engaged himself to a lumberman by the

name of Evans, and went with him to Clearfield Co., Pa., remaining with him first as a farm hand and lumberman, and later as engineer, until the spring of 1859, when he moved to Johnstown, Pa.; working as a machinist for the Cambria Iron Company under John Fritz, then General Superintendent of that Company. Later in that year he went to Chattanooga, Tenn., to assist Miles Edwards in the erection of a blast furnace.

He remained at Chattanooga until after the breaking out of the Rebellion, having in the meantime married Miss Harriet Lloyd of that place.

In 1861 he was again employed by the Cambria Iron Company as a machinist. In response to President Lincoln's call for nine months' men, he volunteered on July 31st, 1862; enlisting as a private in Co. A., 133d Reg., P.V., he was soon promoted to corporal. He served with his regiment in the army of the Potomac, participating in the battles of Fredericksburg and Chancellorsville; in both engagements distinguishing himself by personal bravery. Upon the expiration of his term of service, May 26th, 1863, he returned to Johnstown, resuming his position with the Cambria Iron Company.

Later he organized Company F., 194th Reg., P.V., and was mustered in as captain of the same on July 20th, 1864. In accordance with Circular Order No. 56, A.G.O., he was mustered out as a captain of that organization, and re-mustered as captain of an independent company—this being formed of members of the 193d and 194th Regs., P.V.

Captain Jones' company was assigned to provost duty in Baltimore, Md., under Colonel J. Wooley, Provost Marshal; that city being in the Middle Department, commanded by Major General Lew Wallace, with Department Head-quarters at Baltimore.

While acting as Commander of the Provost Guard of Baltimore, Captain Jones was called upon to perform many duties requiring both tact and personal courage, as well as to exercise the qualities of a strict disciplinarian. So well did he and his command acquit themselves, that they not only possessed the confidence of their superior officers, but were publicly complimented by General Wallace. Captain Jones was mustered out on June 17th, 1865, following the close of the war.

He returned to Johnstown, Pa, and again entered the employ of the Cambria Iron Company as assistant to George Fritz, the Company's General Superintendent and Chief Engineer, and as

such assisted in the construction of the Cambria Iron Company's Bessemer Steel Converting and Blooming Mill Plants.

Upon the death of George Fritz, in August, 1873, he resigned his position, and was soon afterwards engaged by the Edgar Thomson Steel Co. (now Carnegie Bros. & Co., Limited) to take charge of their Steel Works and Rail Mill—then building from plans designed by A. L. Holley, at Bessemer, Alleghany Co., Pa.

Upon the completion of the works, Captain Jones was made the General Superintendent, and afterwards given full charge of the Engineering Department, as well as the general management of the works. While this plant when erected was, perhaps, the most perfect one in the United States, the rapid advance in the art of steel-making soon made it desirable to completely remodel it, which was done under his direction; the Blooming Mill being rebuilt in 1881, and the Converting Works in 1882.

This Company also decided to build blast furnaces, completing Furnace A., 15 feet 5 inches bosh by 66 feet high, in 1879; and Furnaces B. and C., 21 feet bosh by 80 feet high, in 1880. These were so successful under Captain Jones' management that he was authorized to build two more; completing Furnaces D. and E., 23 feet bosh by 80 feet high, in 1881; and again adding Furnaces F. and G., 23 feet bosh by 80 feet high, in 1886 and 1887 respectively. Furnace H. was in course of construction at the time of his death.

In 1885 he attached automatic tables to the rail mill, thus doing away with a large number of skilled operatives; these tables being covered by his own and Robert W. Hunt's patents. The works were so successful that in 1887 Captain Jones received permission to build an entirely new rail mill; in the construction of which he departed from all precedent, and the result more than filled his most sanguine anticipation.

In 1888 his duties were increased by his being made consulting engineer to Carnegie, Phipps & Co. The principal object of this appointment was to cover their extensive plant at Homestead.

Captain Jones was an industrious inventor, and has covered many of his improvements by patents. Among them being: "A Device for Operating Ladles in Bessemer Process"; "Improvements in Hose Couplings," patented December 12th, 1876; "Fastenings for Bessemer Converters," patented December 26th,

1876; "Improvements in Washes for Ingot Moulds," June 12th, 1876; "Hot beds for Bending Rails," April 10th, 1887; "Machine for Sawing Metal Bars," August 7th, 1877; "Process and Apparatus for Compressing Ingots while Casting," September, 1878; "Ingot Mould," October 1st, 1878; "Cooling Roll Journals and Shafts," July 5th, 1881; "Feeding Appliance for Rolling Mills," April 27th, 1886; "Gas Furnace for Boilers," May 4th, 1886; "Art of Manufacturing Railroad Bars," October 12th, 1886; "Appliance for Rolls," May 15th, 1888; "Housing Caps for Rolls," May 15th, 1888; "Apparatus for Removing and Setting Rolls," June 26th, 1888; "Apparatus for Removing Ingots from Moulds," January 1st, 1889; "Method of Mixing Molten Pig Metal," June 4th, 1889; "Apparatus for Mixing Pig Metal," June 4th, 1889.

Captain Jones was a member of the American Institute of Mining Engineers, The American Society of Mechanical Engineers, Engineers' Society of Western Pennsylvania, and the Iron and Steel Institute of Great Britain. He was a frequent contributor to the papers of these various societies on subjects relating to Mechanics and Bessemer Steel Manufacture.

In 1888 he was chosen senior Vice-Commander, Department of Pennsylvania, G. A. R.

As soon as news was received of the terrible Johnstown, Pa., flood disaster, May 30th, 1888, Captain Jones acted with his characteristic promptness and decision. He dispatched a trusted messenger to investigate and report to him the true situation. As many of the citizens of Braddock had with Captain Jones been former residents of Johnstown, they were intensely excited. He directed this into systematized collections of supplies which were the first relief to be forwarded to the stricken people. The officials of the Pennsylvania Railroad Co. requested him to assume command of the workmen which they proposed sending. He consented, and impressed upon them the magnitude of the undertaking. Upon reaching Johnstown after a march of some miles, Captain Jones at once established his men in an organized camp. His dispatch to the relief committee of the Pittsburgh Chamber of Commerce, stating that the work was beyond the limits of any volunteer movement, and could only be successfully handled by the State, and also urging the General Government to send a pontoon train to bridge the streams, was the first comprehensive grasp of the situation.

Captain Jones was possessed of great physical strength and an indomitable will, but overmastering all, a most generous nature, and a heart as tender as any woman's. While quick of temper, he was ever ready to acknowledge and repair a mistake. Without the advantages of early education and associations, he cultivated a true love of the beautiful in nature, art, and literature.

His life's success was most intimately identified with that of the Bessemer Process in America. Alexander L. Holley's fame will always stand as having made the wonderful developments of that process possible, but without the co-operation of such practical mechanics and energetic developers as George Fritz and William R. Jones, Holley's convictions of the possibilities would, at least, have been later in realization. Fritz was called away just as the first triumphs were being attained. Holley lived to see what appeared to be complete victory, but Jones and others were spared to carry the process beyond Holley's most sanguine dreams. Jones loved Holley, and seemed to feel that each succeeding achievement of his was adding another garland to Holley's fame.

Captain Jones was beloved by all who knew him. The men under his management worshipped him, and the community in which he lived, honored and respected him. The world is better for his life, but many hearts are made desolate by his death. If ever a man existed who was absolutely honest in every fibre of his being, such a man was William Richard Jones.

RUDOLPH JULIUS EMANUEL CLAUSIUS.

Rudolph Julius Emanuel Clausius was born at Cöslin, Pomerania, a province of Prussia bordering on the Baltic, January 1st, 1822.

While a child, he saw something of the ship building and other construction and manufacturing then growing up in that district, and became interested in all the sciences and their applications to the purposes of industry. He was sent to Berlin when old enough to attend the secondary school, and there at once showed his inclination towards science, and especially his talent as a mathematician. He went through the University, giving special attention to these branches, and, on graduation, was made "Privatdocent" in the University, and an instructor

in Natural Philosophy—the good old term was then still adhered to—in the Royal School of Artillery. While in this position, he published a number of valuable papers on applied optics, some of which have been translated into English and published in Taylor's Scientific Memoirs, a collection of papers familiar to every reader in physical science.

Clausius was called to the Chair of Natural Philosophy at Zurich, in 1857, at the age of 35, and before he had acquired much fame among physicists, and before he had become at all known to the world at large. He remained at the Polytechnic School seventeen years, and it was here that his most famous work became known and appreciated. He had, as early as 1849–50, while still at Berlin, actually created the science as author of which he ultimately became famous; but his deductions and discoveries had not as yet attracted the attention of the men of science of the day, nor had they become acknowledged as accurate and reliable. Both Clausius and Rankine had arrived at the form and discovered the uses of what is now known as the "General Equation of Thermodynamics" almost simultaneously, in 1848–9, the one publishing his results in Poggendorff's Annalen for 1850, and the other in the Transactions of the Royal Society of Edinburgh of similar date; both discovering the fact of the partial condensation of steam and some other vapors while doing work by adiabatic expansion, about 1856, and both indicating the fact of the constancy of both specific heats and constructing a correct thermodynamic theory of the heat engines during the decade 1859–60, reaching all essential and important results in singular unanimity and publishing generally almost simultaneously. Rankine collected his work and republished, first, in the Philosophical Magazine, and then in his "Manual of the Steam Engine." Clausius collected his papers in book-form, and, toward the close of his life, revised them and gave them a more continuous and logical shape, and incorporated with them some controversial matter, the whole, fortunately, giving in compact form all his more important work in thermodynamics.

After his arrival at Zurich, Clausius drifted into the study of molecular physics and of electrical phenomena, and his work in thermodynamics mainly ceased. In fact, the work of the great founders of the science was already substantially accomplished, and only minor lines of investigation remained to be pursued by

their successors and followers. Ten years had seen a new science built up and a new world of research opened in all directions of application of the energies of nature. Clausius' collected and rewritten works were published in 1864, under the title, "The Mechanical Theory of Heat" (*Wärmetheorie*), and this little work exhibits in their best form the researches of their author and his theory of the steam engine. Subsequently he gave more attention to electrical dynamics and published a considerable number of notable papers. His work on the science of the steam engine and on thermodynamics had been substantially completed, and he did little more up to the close of his life in that field.

In the year 1869 Professor Clausius was appointed Professor of Natural Philosophy at the University of Bonn, and there remained up to the date of his death, August 24th, 1888. His work at Bonn was less remarkable than that which had preceded and was mainly on the more interesting relations in molecular and mathematical physics.

This is not the place to speak at length of the works of the great master; but it will be enough to say that they are, in their special field, classic. The writer of this notice has elsewhere* commented at length upon their scientific importance and value.

As stated by his great contemporary, Rankine, Carnot was the first to enunciate the principle that the efficiency of the thermodynamic action, in any heat engine, is a function solely of the two temperatures between which heat is received and emitted, and is independent of the nature of the working substance; Professor Clausius and Sir William Thomson brought the statement into full accord, for the first time, with the modern science of thermodynamics.

Another interesting discovery made by Clausius, and one of primary importance, was that of the constancy of the two specific heats and of their difference, a conclusion which was disputed very earnestly by the physicists of the time as contrary to experimentally proven fact. The re-investigation of the subject by Regnault, subsequently, conformed the deductions of Clausius and settled the question.

Professor Clausius was made a foreign member of the Royal Society of Great Britain in 1868, and was given the Copley

* Paper "On the Theory of the Steam Engine." Reports of the Brit. Assoc., 1884.

medal in 1879. He has been repeatedly decorated by the various European governments, and, having taken service in the ambulance corps during the Franco-German war, 1870, was decorated by both governments, receiving both the Iron Cross of Prussia and the button of the Legion of Honor of France. Clausius was made an honorary member of the American Society of Mechanical Engineers immediately upon the institution of that class of members, and was among the first two or three elected on the recommendation of the full council, every member signing the recommendation, as has been usually customary in the selection of members of that order. His recognition of the compliment was most cordial and kindly, and as appreciative as if, as he seemed to feel, the honor were conferred by the Society and not by himself.

In the death of Rudolph Julius Emanuel Clausius, the Society has met with a great loss, and the world loses a man to which it owes an inestimable debt. Honored by the world, beloved by numberless friends and pupils, happy in unexcelled achievement, our great colleague has made and enjoyed a life that all well envy.

JOHN ERICSSON.

John Ericsson was born July 31st, 1803, in the province of Wermland, Sweden. His father, Olof Ericsson, was proprietor of mines; his mother, Sophie, being the daughter of an ironmaster. Nils, John Ericsson's elder brother, rose to be baron, colonel of engineers, chief of the state railways, and, with his three sons, sat in the Swedish Diet.

At the age of ten, John Ericsson constructed a miniature sawmill and a pumping-machine that attracted the notice of Count Platen, chief of the great ship-canal intersecting the Swedish Peninsula. At twelve, the youthful contriver was made a cadet of mechanical engineers; the following year, a leveller on the Gotha Canal. At seventeen, Ericsson entered the army as ensign, and rapidly reached a lieutenancy in consequence of his beautiful military maps, which had attracted the special attention of King Charles John (Bernadotte).

When about twenty-two years old, Lieutenant Ericsson constructed a flame-engine of ten horse-power, and journeyed to London in 1826, on leave, to introduce it. Once there, he resigned his commission. The resignation was accepted, but first

he was promoted to a captaincy. He never returned to his native country, but from it he received many honors and decorations, while in 1867 a great granite monument, eighteen feet high, quarried by the unpaid labor of the miners, some of whom had worked for his father, was set up with gala festivities in front of his mansion, inscribed, "John Ericsson was born here in 1803."

During the next few years, in England, Ericsson produced about forty machines, of which a third were patented. They included a file-cutting device, an instrument for taking soundings (still in use), a hydrostatic weighing-machine to which the Society of Arts awarded a prize, an apparatus for making salt from brine, a pumping-engine, a rotary steam-engine, and a system of fan-blowers for artificial draught in steam-boilers, dispensing with huge smoke-stacks, and economizing fuel. To the steamship *Victory*, in 1828, he applied the principle of condensing steam and returning the water to the boiler; and four years later he gave to the *Corsair* the centrifugal fan-blowers now generally used in American steam vessels. In 1830 he introduced into the locomotives "King William" and "Adelaide" a link motion for reversing. In 1834 he used super-heated steam in an engine on the Regent's Canal Basin.

In 1829 the Liverpool and Manchester Railway had offered a prize for competing locomotives. Ericsson planned and hurried to completion an engine, the "Novelty," in seven weeks. It had an artificial draught, and the London *Times*, of October 8th, 1829, said that in speed it "far excelled" all competitors; that "it was the lightest and most elegant carriage on the road yesterday, and the velocity with which it moved surprised and amazed every beholder. It shot along the line at the amazing rate of thirty miles an hour." But Stephenson's "Rocket" proved superior in point of traction. "In locomotive engineering," wrote John Bourne, nearly half a century later, "nothing more original or more elegant has been produced than the 'Novelty.'" Ericsson in 1829, nearly threescore years ago, constructed a steam fire-engine, employed in putting out a fire in the Argyle Rooms. Another, the next year, guarded the Liverpool Dock; a third was sent to Berlin. Ten years later, in 1840, the Mechanics' Institute, of New York, gave its large gold medal to Ericsson for the best system of fire-engines.

His famous caloric engine was produced in 1833. The scien-

tific world of London hailed it with astonishment. Lardner, Ure, Faraday, and Sir R. Phillips gave special attention to it. The high temperature evolved prevented that first machine from becoming practical, but twenty years later, in 1853, a voyage of the caloric ship, *Ericsson*, a vessel of ,000 tons, 260 feet long, built at great expense, gave a result from New York to Washington and back, best told in Ericsson's own words: "The ship, after completion, made a successful trip from New York to Washington and back, during the winter season; but the average speed at sea proving insufficient for commercial purposes, the owners, with regret, acceded to my proposition to remove the costly machinery, although it had proved perfect as a mechanical combination." Still, it has been applied successfully in more than six thousand engines to minor useful purposes—pumping, printing, hoisting, grinding, telegraph instruments, light-house service, sewing-machines, and so on. The American Academy of Arts and Sciences awarded the gold and silver medals of the Rumford premium to Ericsson "for his improvements in the arrangement of heat, particularly as shown in his caloric engines of 1858." This was the second bestowal of the Rumford Medal in this country.

But to go back now to chronological order, reference must be made to that device of supreme importance, the screw-propeller. In 1837 Ericsson built a tug, 40 feet by 8, with 3 feet draught, having two propellers of 5¼ feet diameter. This boat went through the water alone at ten miles per hour, and towed a packet ship, the *Toronto*, at five miles per hour. Ericsson invited the British Admiralty to inspect his boat, and towed their barge at a rapid rate; but their lordships solemnly concluded that, as the motive power was in the stern, the novel craft would not steer! Ericsson, in 1839, came to America, and in 1841 began to build the *Princeton*, the first naval vessel which ever carried her machinery under the water-line, out of the reach of hostile shot. She was completed in 1844, and was built under the direction of Commodore Stockton. This vessel dictated reconstruction to the fleets of the world. The *Princeton* included other inventions of Ericsson—a direct-acting steam-engine of unusual compactness; a telescope smoke-stack, in place of the tall, ordinary pipe; a centrifugal blower in the hold; a gun-carriage with machinery for taking up the recoil, the self-acting lock allowing the gun to be fired accurately. The London *Mechanics' Magazine* has said:

"The undivided honors of having built the first practical screw steamer, the first screw war ship, the first cupola [turret] vessel, belong to John Ericsson."

Such a device had been offered by Ericsson in 1854 to Napoleon III., and in the fall of 1861 he proposed it to our Navy Department. By extraordinary energy and executive skill, the *Monitor* was launched, with steam-machinery complete, a hundred days from the laying of the keel plate, at Rowland's Continental Iron Works, and arrived in Hampton Roads just in time to defeat, March 9th, 1862, the Confederate iron-clad *Merrimac*, which had destroyed the *Cumberland* and *Congress*, and was about to sink or disperse the rest of the government's wooden fleet. But for the *Monitor* the whole face of the war might have been changed, and European interference attempted.

A fleet of iron-clad vessels of the *Monitor* type was built with extraordinary rapidity after the victory at Hampton Roads. Six of them, in Charleston Harbor, within fifty-two days, were struck by hostile shots an aggregate of 629 times without one penetration of side armor, turret, or pilot-house. The *Weehawken* defeated and captured the Confederate ram *Atlanta*, and the *Montauk* destroyed the *Nashville*. In 1864 the Monitors captured the ram *Tennessee*. Russia, Sweden, Norway, and Turkey adopted the American turret system, and when the *Miantonomoh* crossed the ocean, even the British construction yielded, and carried it out on a far larger scale.

After the close of the war, Ericsson turned his attention to submarine attack, and his torpedo-boat, the *Destroyer*, was an iron vessel, 130 feet long, which carried a submarine 16-inch gun 30 feet long. It could discharge a projectile weighing 1,500 pounds, and containing 300 pounds of gun cotton, against an iron-clad's hull, beneath the customary water-line armor belt, with such effect that water-tight compartments would be of no avail. This was built at the Delamater Iron Works.

The variety of Captain Ericsson's work is only less remarkable than its intrinsic importance. In 1851, at the London World's Fair, he exhibited an instrument for measuring distances at sea; a hydrostatic gauge for fluids under pressure; a gauge for the volume of water passing through pipes; the alarm barometer; a pyrometer; a measure for fluids by the velocity with which they pass through definite apertures; a sea lead for use without rounding the vessel to the wind. His contributions to

the Centennial Exhibition of 1876 are described in a volume of 600 quarto pages. Amongst his scientific investigations are remarkable computations of the influences tending to retard the earth's rotary motion, including the weight of material taken from below the earth's crest and piled above it by the hand of man.

Ericsson was able to devote many years exclusively to the investigation of solar heat, and to the determination of the mechanical energy which the great luminary has in store for mankind when the coal fields become exhausted. A sun motor, illustrated in "Nature," vol. xxix., page 217, erected 1883, on his premises in Beach Street, was found to develop under ordinary sunshine a steady and reliable power, the striking features of this motor being that the part which receives the radiant heat, unlike the boiler of the steam-engine, does not deteriorate by the action of that heat—a trifling consideration, however, compared with the advantage that the inexhaustible solar storehouse supplies the fuel free of cost or transportation at every point within the temperate and tropical regions of our planet.

The sun motor was the result of experiments conducted during twenty years. Its leading feature a rectangular trough, whose curved bottom, lined with polished plates, reflects the sun's rays toward a cylindrical heater placed longitudinally above the trough. This heater contains the steam or air employed to transfer the solar energy to the motor by cylinders provided with pistons and valves resembling those of ordinary engines.

The operation of the sun motor in 1883 enabled Captain Ericsson to prove that the calculations made by certain French scientists, notably Pouillet, Vicaire, and Sainte-Claire Deville, assigning to the solar surface a comparatively low temperature, were incorrect, and that Newton's far higher estimate on the same subject must be accepted.

Yet the cylindrical heater of the sun motor, constructed as it was solely for generating steam or expanding air, did not accurately determine the area acted upon by the reflected radiant heat. The rays, in the first place, acted only on part of the bottom of the heater, and their density also diminished gradually toward the sides, while imperfections in the surface of the plates prevented the exact course of the terminal rays from being defined. Accordingly the following year, 1884, Captain

Ericsson erected a solar pyrometer of large dimensions. It was a polygonal reflector, composed of inclined mirrors, with a central conical heater, each point of whose surface received an equal amount of radiant heat in a given time. The mirrors were ninety-six in number, and the reflector and conical heater were sustained by a flat hub and eight radial spokes bent upward toward the ends at an angle of 45°.

Another instrument of Captain Ericsson's was the pyrheliometer, designed to show the intensity of the sun's rays, and also his investigations of the surface and temperature of the moon. Seventeen years ago he announced before the American Academy of Science that the theory that the moon was devoid of water was a great error. He demonstrated that the great "ring mountains" cannot be composed of volcanic matter,—"mineral substances originally in a state of fusion,"—but are inert glaciers made permanent as granite by perpetual intense cold. Pursuing this subject, Captain Ericsson has shown exactly how the annular glaciers are formed by vortex columns of vapor, and how the conical hills within the circular walls are formed. One of his conclusions was that the water on the moon bears the same proportion to its mass as the water of our oceans to the terrestrial mass, and that the aggregate water on the moon is 2,028,600 cubic miles.

Captain Ericsson was proposed as one of the honorary members of this Society at its formation, but he declined to be so ranked, preferring to be considered as still among those bearing the burdens of active practice. His friends in this Society desired in 1886 to give him a testimonial banquet in recognition of his marvellous talent, but he would not hear of it, even when solicited by his most intimate friends. He was long intimate with both Messrs. C. H. Delamater and Thos. F. Rowland, who had been constructors of most of his successes. He died in New York on the 2d of March, 1889, and many members of the Society attended his funeral services as its delegated representatives.

NOTE.—This notice has been prepared in the main from facts which were collated by Colonel Pond and by Mr. Taylor, the latter Captain Ericsson's secretary for many years.

CCCLVI.

APPENDIX II.

THE EUROPEAN TRIP OF THE JOINT PARTY OF ENGINEERS IN THE SUMMER OF 1889.

It has been thought desirable that the transactions of the American Society of Mechanical Engineers, should contain a record of some of the features of the trip of its members to England, Paris, and Germany, during the summer of 1889.* Apart from the pleasurable side of the trip to those who participated in it, the nature of the entertainment received gave to the excursion almost an international significance beside what it possessed of professional profit. The account of it would naturally divide itself into

I. Preliminaries.
II. The Atlantic trip.
III. Entertainment in England.
IV. Entertainment in Paris.
V. Entertainment in Germany.
VI. The return and conclusion.
VII. Addresses, and resolutions of thanks, and correspondence.

I. Preliminaries.

The first conception of a trip of a large party of engineers was doubtless that which lay, in 1880, and up to the time of his death, in the mind of the late Alexander L. Holley, Vice-President of the Society, and one of its founders. Mr. Holley labored hard to bring about such an interchange of courtesies, but for various reasons, at the time he tried it, his efforts were not successful. The first origin of the trip of 1889 was a suggestion at a dinner, given in London, by the President of the Institution of Mechanical Engineers of Great Britain, to two members of this Society. That preliminary conference led to the writing of the fol-

* There is also much of original and interesting matter of record on file in the office of the Society, where the initiative of many of the details has lain.

lowing letter, which was read at the Nineteenth Meeting of the Society in Scranton, October, 1888:

October 6th, 1888.

THE PRESIDENT OF THE AMERICAN SOCIETY OF MECHANICAL ENGINEERS.

Dear Sir: I am authorized to invite your Society to hold a week's meeting in London next year, some time in May. We were given to understand that many of the leading American Engineers would visit Europe to see the Paris Exhibition of 1889. If your Society should accept the invitation it would be warmly welcomed by the Institution of Civil Engineers, the Iron and Steel Institute, and my own Society, viz., the Institution of Mechanical Engineers of England, and others. Your treasurer, Mr. Wiley, will more fully explain to you our desire to welcome our brother Engineers of America.

* * * * * * * * * *

I remain, dear sir, yours faithfully,

E. N. CARBUTT,

President Institute Mech. Eng'rs.

Immediately, on the receipt of this letter, the Council appointed a committee of its members to ascertain the facts in reference to transportation, etc., for such a visit, and to ascertain from the members how many would be likely to participate. There was, therefore, issued in November, 1888, a circular, stating the facts in the possession of the Committee, and enclosing a postal card for reply. The Committee thought it desirable to divide the members into three classes: those who would certainly go, those who certainly could not go, and those who would be able to notify the Committee at a later date. This circular suggested that the minimum absence would be five weeks; that the cost per day per person would be $4 on shore,* and stated that the Committee had obtained from the Inman and International Steamship Company a round-trip rate of $110, and the tender of a steamer for our exclusive use, if we could fill its cabin. This circular was also sent in proof to the American Institute of Mining Engineers and the American Society of Civil Engineers. The former Society cast in their lot with the Mechanical Engineers at once, and, in everything which concerns the party, that Society was thereafter included. The first circular of inquiry from the Civil Engineers was not sent out until a later date. The favorable replies to this first circular, somewhat to the surprise of the Committee, showed a possibility of nearly three hundred persons taking part in the trip, and it was felt desirable that those who fully intended to go should be at once separated from those who merely hoped to go.

* Experience showed that, in most cases, this should have been nearer $6 or $7.

Accordingly, on January 15th, 1889, the second circular was issued to every one who had expressed himself as desiring to make one of the party, requesting him to remit the amount of the passage money for his party, with the understanding that the desirable accommodations on the steamer would be assigned in the order in which remittances were received. It seemed to the Committee that this was the only fair way to settle the delicate question of locating the members of the party, by having them stand in line, as it were, and thus claim their precedence. At the same time the Committee proceeded to protect themselves against the embarrassment which they feared when they had received favorable replies from more persons than the steamer could accommodate. They therefore procured from the Inman Line a further tender of privilege to berth a certain number on the fast steamer *City of New York*, of that line, at the increased rate charged for the same accommodations upon it ($125). This tender this Society did not make use of, to any large extent, but turned it over to the American Society of Civil Engineers (who were also in mind when the rate was asked for by the Committee) for the use of their members, and it was in this way that the party became divided into two groups.

By February 20th remittances had been received from the members in sufficient numbers (132) to insure the securing of the proposed steamer for our exclusive use, and on that day the contract was signed by the representatives of the Society and the steamship Company, and the ship became ours.*

Meanwhile the applications kept coming in, and the Company engaged to turn over also the after cabin of the steamer for the use of the party, and additional accommodation for thirty-four more persons was secured. The steamer *City of Richmond* was assigned to us, and our party on it numbered 166.

Meanwhile, there had been received from the Institution of Civil Engineers, in London, the following communication:

* The agents of the steamship line informed the Committee that, in the history of the Company's business, they were the first individuals to charter a vessel for exclusive use of their friends.

THE INSTITUTION OF CIVIL ENGINEERS.
25 Great George Street, Westminster, S. W.
November 23, 1888.

TO THE SECRETARY OF
THE AMERICAN SOCIETY OF MECHANICAL ENGINEERS,
280 Broadway, New York City, U. S.

Sir:

It is reported that many Engineers from the United States will probably visit Europe during the International Exhibition which is to be held in Paris in 1889.

In view of this, the Council of the Institution of Civil Engineers, at the first meeting of the present session, directed an inquiry to be addressed to you to ask: 1st.—Whether this report is correct, and, if so, whether your Society can give any idea of the number of your members likely to come. 2d.—Whether they will travel by way of England; and 3d.—What may be expected to be the approximate date of their arrival and the duration of their stay in this country.

The object of this inquiry is to enable the Council to consider the possibility of making such arrangements as may best tend to further the objects which the visitors have in view, and to render their visit generally as useful and agreeable as possible.

The Council need hardly assure you of its good will towards its professional brethren in the United States, and of its desire to embrace this opportunity of manifesting its friendly feeling to the utmost of its power.

Of course, in any case, the facilities afforded by this Institution are always at the disposal of your members.

We are, yours faithfully,

GEORGE B. BRUCE, *President.*
WILLIAM POLE, *Hon. Secretary.*
JAMES FORREST, *Secretary.*

And also one from the Society of Arts of London, as follows:

SOCIETY OF ARTS.
John Street, Adelphi, London, W. C.
December 8, 1888.

TO THE SECRETARY OF
THE AMERICAN SOCIETY OF MECHANICAL ENGINEERS.

Sir:

The Council of this Society have been given to understand that a visit of American Engineers to this country during the Spring or Summer of next year, is in contemplation.

The Council will be very glad if the Society of Arts can in any way facilitate the visit of your Members to England, or render their stay here more pleasant. They will be glad to place the rooms of the Society at their disposal, and if their visit should coincide with the date of the Society's Annual Conversazione in June, they will be very pleased to see as guests, on that occasion, such of your members as may be able to attend.

We have the honor to be, Sir,
Your obedient servants,

ABERCORN,
Chairman of Council.
H. FREEMAN WOOD, *Secretary.*

As soon as the matter was definitely settled, these invitations were accepted by the Society through its President, in the name of the two organizations, and the details of the programme on the other side were inaugurated.

It had been found convenient in England for the leadership in the matter of entertainments, etc., in that country, to be assumed by the Institution of Civil Engineers of Great Britain, the older and more comprehensive Society, and they thenceforth became the channel through which the courtesies of their hosts reached the American engineers.

Early in March the berthing of the party on board the steamer was begun by the representatives of the steamship Company, and it may not be without interest to record that two difficulties were at once encountered. The first was that there were more ladies in the party, accompanying their husbands, than there were rooms on board the ship which contained but two berths. It was therefore necessary to send to all the married tourists to ascertain whether they would prefer to pay what the steamship company asked for its three-berth rooms, or whether they preferred taking the risk of finding a room in which they could be by themselves. This difficulty settled itself when several paid the extra premium to secure the larger rooms.

The second difficulty arose when certain members in electing their room-mates chose their friends, who would not otherwise have been entitled to as early a choice as they thus secured. So far as known, however, this difficulty caused little or no trouble or disagreement. The Committee had paid in to the Company for the tickets issued the sum of $18,645, and these tickets were distributed to the members by registered mail.

Meanwhile, by the active exertions of Mr. James Forrest, Secretary of the Institution of Civil Engineers, in London, a reception committee, formed exclusively of all classes of members in the Institution of Civil Engineers, had been composed. That Committee was a very remarkable one, and was as follows:

VISIT OF AMERICAN ENGINEERS TO THE UNITED KINGDOM.

RECEPTION COMMITTEE FORMED EXCLUSIVELY OF MEMBERS OF ALL CLASSES OF THE INSTITUTION OF CIVIL ENGINEERS

Abel, Sir Frederick Augustus, C.B., D.C.L., F.R.S., Hon. M. Inst. C. E., M. of C. Iron and Steel Inst., Past Pres. Elec. Eng., Vice-Pres. Society of Arts, 1 Adam Street, Adelphi, W. C.

Abernethy, James, F.R.S.E., Past Pres. Inst. C. E., 4 Delahay Street, Westminster, S. W.

Adamson, Daniel, M. Inst. C. E., Vice-Pres. Inst. Mech. Eng., Past Pres. Iron and Steel Inst., The Towers, Didsbury.

Aird, John, M.P., Assoc. Inst. C. E., 37 Great George Street, Westminster, S. W.

Allport, Sir James Joseph, Assoc. Inst. C. E., Midland Ry., Derby.

Anderson, William, M. of C. Inst. C. E., Vice-Pres. Inst. Mech. Eng., Past Pres. Inst. C. E. I., M. of C. Society of Arts, Lesney House, Erith, Kent.

Armstrong, Lord, C.B., LL.D., D.C.L., F.R.S., Past Pres. Inst. C. E., Past Pres. Inst. Mech. Eng., Vice-Pres. Inst. Naval Architects, Past Pres. North of England Inst. Mining and Mech. Eng., Elswick Works, Newcastle-on-Tyne. .

Aspinall, John Audley Frederick, M. Inst. C. E., Past Pres. Inst. C. E. I., Lancashire and Yorkshire Ry. Loco. Works, Horwich.

Atkinson, William, M. Inst. C. E., 17 Victoria Street, Westminster, S. W.

Bache, Alfred, B.A., Assoc. Inst. C. E., Sec. Inst. Mech. Eng., 19 Victoria Street, Westminster, S. W.

Baker, Benjamin, M. of C. Inst. C. E., M. of C. Society of Arts, 2 Queen Square Place, Westminster, S. W.

Barlow, William Henry, F.R.S., Past Pres. Inst. C. E., M. of C. Society of Arts, 2 Old Palace Yard, Westminster, S. W.

Barry, John Wolfe, M. of C. Inst. C. E., 23 Delahay Street, Westminster, S. W.

Bateman, J. F. La Trobe, F.R.S.L. and E., Past Pres. Inst. C. E., 18 Abingdon Street, Westminster, S. W.

Bauerman, H., Assoc. M. Inst. C. E., 41 Acre Lane, Brixton, S. W.

Bazalgette, Sir Joseph William, C. B., Past Pres. Inst. C. E., St. Mary's, Wimbledon.

Beloe, Charles H., M. Inst. C. E., Victoria Mansions, Westminster, S. W.

Berkley, George, Vice-Pres. Inst. C. E., 57 Charing Cross, S. W.

Bessemer, Sir Henry, F.R.S., M. of C. Inst. C. E., Past Pres. Iron and Steel Inst., Denmark Hill, S. E.

Bewick, Thomas John, M. Inst. C. E., Vice-Pres. North of England Mining and Mech. Eng., Suffolk House, Laurence Pountney Hill, E. C.

Boulton, S. B., Assoc. Inst. C. E., 64 Cannon Street, E. C.

Bramwell, Sir Frederick Joseph, Bart., D.C.L., F.R.S., Past Pres. Inst. C. E., Past Pres. Inst. Mech. Eng., Vice-Pres. Inst. Naval Architects, Vice-Pres. Society of Arts, 5 Great George Street, Westminster, S. W.

Brassey, Lord, K.C.B., D.C.L., Assoc. Inst. C. E., Vice-Pres Inst. Naval Architects, 4 Great George Street, Westminster, S. W.

Brock, Walter, M. Inst. C. E., M. of C. Inst. Naval Architects, Messrs. Denny Brothers, Dumbarton, N. B.

Brown, Thomas Forster, M. Inst. C. E., Past Pres. South Wales Inst. Eng., Guildhall Chambers, Cardiff.

Browne, Sir Benjamin Chapman, M. Inst. C. E., Vice-Pres. North East Coast Inst. Eng., Messrs Hawthorn, Leslie & Co., Newcastle-on-Tyne.

Bruce, Sir George Barclay, President Inst. C. E., 3 Victoria Street, Westminster, S. W.

Brunlees, Sir James. F.R.S.E., Past Pres. Inst. C. E., 12 Victoria Street, Westminster, S. W.

Burt, J. Mowlem, Assoc. Inst. C. E., 19 Grosvenor Road, S. W.

Carbutt, Edward Hamer, M. Inst. C. E., Past Pres. Inst. Mech. Eng., 19 Hyde Park Gardens, W.

Carpmael, Alfred, Assoc. Inst. C. E., Vice-Pres. Society of Arts, 1 Copthall Buildings, E. C.

Cawkwell, William, Assoc. Inst. C. E., Euston Station, N. W.

Chance, James Timmins, M.A., Assoc. Inst. C. E., 51 Prince's Gate, S. W.

Chapman, Henry, M. Inst. C. E., 69 Victoria Street, Westminster, S. W.

Clark, Josiah Latimer, M. Inst. C. E., Past Pres. Inst. Elec. Eng., 11 Victoria Street, Westminster, S. W.

Clarke, Lieut.-Gen. Sir Andrew, G.C.M.G., C.B., C.I.E., late R. E., Assoc. of C. Inst. C. E., 52 Portland Place, W.

Coode, Sir John, K.C.M.G., Vice-Pres. Inst. C. E., 9 Victoria Street, Westminster, S. W.

Cotterill, James Henry, M.A., F.R.S., Assoc. M. Inst. C. E., Assoc. M. of C. Inst. Naval Architects, 18 Gloucester Place, Greenwich, S. E.

Cotton, Charles Philip, M. Inst. C. E., Past Pres. Inst. C. E. I., Custom House, Dublin.

Cowper, Edward Alfred, M. of C. Inst. C. E., 6 Great George Street, Westminster, S. W.

Crimp, W. Santo, Assoc. M. Inst. C. E., Local Board Office, Wimbledon.

Crompton, Rookes Evelyn Bell, M. Inst. C. E., M. of C. Inst. Elec. Eng., Mansion House Buildings, E. C.

Cunningham, J. H., Assoc. M. Inst. C. E., 26 Victoria Street, Westminster, S. W.

Darbishire, Charles H., Assoc. M. Inst. C. E., Pres. Liverpool Eng. Soc., Plas Celyn, Penmaenmawr.

Deacon, George Frederick, M. Inst. C. E., Municipal Offices, Liverpool.

Dean, William, M. Inst. C. E., Great Western Ry., Swindon.

Douglass, Sir James Nicholas, F.R.S., M. of C. Inst. C. E., Vice-Pres. Inst. Mech. Eng., M. of C. Inst. Elec. Eng., Trinity House, E. C.

Doulton Sir Henry, Assoc. Inst. C. E., Lambeth Pottery, S. E.

Duckham, F. E., M. Inst. C. E., Millwall Docks, E.

Duncan, Robert, M. Inst. C. E., Past Pres. Inst. Eng., Scotland, Whitefield Works, Govan, Glasgow.

Dunscombe, Clement, M.A., M. Inst. C. E., Municipal Offices, Liverpool.

Elgar, Professor Francis, LL.D., F.R.S.E., M. Inst. C. E., Vice-Pres. Inst. Naval Architects, Admiralty, S. W.

Ellington, E. B., M. Inst. C. E., 9 Bridge Street, Westminster, S. W.

Elliot, Sir George, Bart., M.P., M. Inst. C. E., Past Pres. North of England Inst. Mining and Mech. Eng., 23 Great George Street, Westminster, S. W.

Evans, John, F.R.S., Assoc. Inst. C. E., Nash Mills, Hemel Hempstead.

Evens, Thomas, M. Inst. C. E., Vice-Pres. South Wales Inst. Eng., Pearson Place, Bute Docks, Cardiff.

Fenton, Sir Myles, Assoc. Inst. C. E., M. of C. Society of Arts, South Eastern Ry., London Bridge, S. E.

Findlay, C. F., M.A., M. Inst. C. E., 8 Great George Street, Westminster, S. W.

Findlay, George, Assoc. Inst. C. E., Hill House, Edgeware, N. W.

Forbes, Professor George, M.A., F.R.S.L. and E., M. Inst. C. E., 34 Great George Street, Westminster, S. W.

Forbes, James Staats, Assoc. Inst. C. E., London, Chatham & Dover Ry., Victoria Station, S. W.

Forrest, James, Sec. Inst. C. E., 25 Great George Street, Westminster, S. W.

Fowler, Sir John, K.C.M.G., Past Pres. Inst. C. E., 2 Queen Square Place, Westminster, S. W.

Fox, Sir Douglas, M. of C. Inst. C. E., 28 Victoria Street, Westminster, S. W.

Froude, Robert Edmund, M. Inst. C. E., Assoc. M. of C. Inst., Naval Architects, Admiralty Experiment Works, Gosport.

Gale, James Morris, M. Inst. C. E., Past Pres. Inst. Eng. Scotland, 28 Miller Street, Glasgow.

Galloway, Charles J., M. Inst. C. E., Knott Mill Iron Works, Manchester.

Galton, Captain Sir Douglas, K.C.B., late R. E., Assoc. Inst. C. E., M. of C. Inst. Mech. Eng., M. of C. Inst. Elec. Eng., 12 Chester Street, Grosvenor Place, S. W.

Gilchrist, Percy Carlyle, M. Inst. C. E., M. of C. Iron and Steel Inst., 9 Bridge Street, Westminster, S. W.

Girdlestone, John Ward, M. Inst. C. E., 15 Alexandra Road, Clifton, Bristol.

Gordon, Robert, M. Inst. C. E , Guilsborough, Northampton.

Granville, Right Hon. Earl, K.G., Hon. M. Inst. C. E., 14 South Audley Street, W.

Greenwell, George Clementson, M. Inst. C. E., Past Pres. North of England Inst. Mining and Mech. Eng., Duffield, Derby.

Greenwood, Arthur, M Inst. C. E., Albion Works, Leeds.

Gregory, Sir Charles Hutton, K.C.M.G., Past Pres. Inst. C. E., 2 Delahay Street, Westminster, S. W.

Greig, D., M. Inst. C. E., Steam Plough Works, Leeds.

Griffith, John Purser, M. Inst. C. E., Pres. Inst. C.E.I., Port and Docks Office, Dublin.

Harris, H. G., M. Inst. C. E., 5 Great George Street, Westminster, S. W.

Harrison, Major-General R., C.B., C.M.G., R. E., Knellwood, Farnborough Road, Hants.

Hart, J. W., M. Inst. C. E., Thatched House Club, St. James', S. W.

Hartley, Sir Charles Augustus, K.C.M.G., F.R.S.E., Past M. of C. Inst. C. E., 26 Pall Mall, S. W.

Hawkshaw, Sir John, F.R.S. L. and E., Past Pres. Inst. C. E., 33 Great George Street, Westminster, S. W.

Hawksley, Charles, M. of C. of C. Inst. C. E., 30 Great George Street, Westminster, S. W.

Hawksley, Thomas, F.R.S., Past Pres. Inst. C. E., Past Pres. Inst. Mech. Eng., M. of C. Society of Arts, 30 Great George Street, Westminster, S. W.

Hayter, Harrison, Vice-Pres. Inst. C. E., 33 Great George Street, Westminster, S. W.

Haywood, Lieut.-Col. W., M. Inst. C. E., Engineer's Office, Guildhall, E. C.

Head, Jeremiah, M. Inst. C. E., Past Pres. Inst. Mech. Eng., Middlesborough.

Hogg, Charles Pullar, M. Inst. C. E., M. of C. Inst. Eng. Scotland, 175 Hope Street, Glasgow.

Holt, Alfred, M. Inst. C. E., 1 India Buildings, Liverpool.

Hood, J. W. Jacomb, Assoc. M. Inst. C. E., London and Southwestern Ry., Clapham Junction, S. W.

Hood, R. Jacomb, M. Inst. C. E., 25 Bramham Gardens, Kensington, S. W.

Hopkinson, Dr. John, M.A., F.R.S., M. Inst. C. E., Vice-Pres. Inst. Elec. Eng. 5 Victoria Street, Westminster, S. W.

Hunter, Walter, M. Inst. C. E., 48 Bow Road, E.

Hutchinson, Major-Gen. C. Scrope, late R. E. Assoc. Inst. C. E., 1 Whitehall, S. W.

Hutton, Darnton, M. Inst. C. E., 14 Cumberland Terrace, Regent's Park, N. W

Johnson, Samuel Waite, M. Inst. C. E., M. of C. Inst. Mech. Eng., Midland Ry., Derby.

Jones, Harry Edward, M. Inst. C. E., Commercial Gas Co., Stepney, E.

Kennedy, Prof. Alexander Blackie William, F.R.S., M. Inst. C. E., M. of C. Mech. Eng., 3 Princes Street, Westminster. S. W.

King, William, M. Inst. C. E., Gas Office, Duke Street, Liverpool.

Kitson, Sir James, Bart., M. Inst. C. E., Pres. Iron and Steel Inst., Monk Bridge Ironworks, Leeds.

Leslie, Sir Bradford, K.C.I.E., M. Inst. C. E. Tarrangower, Brondesbury, N. W.

Lewis, W. B., M. Inst. C. E., 15 Victoria Street, Westminster, S. W.

Lewis, Sir William Thomas, M. Inst. C. E., Past Pres. South Wales Inst. Eng., Mardy, Aberdare.

Livesey, George Thomas, M. Inst. C. E., 589 Old Kent Road, S. E.

Livesey, James M. Inst. C. E., 28 Victoria Street, Westminster, S. W.

Lucas, Charles Thomas, Assoc. Inst. C. E., 37 Great George Street, Westminster, S. W.

Lucas, Sir Thomas, Bart., Assoc. Inst. C. E., 37 Great George Street, Westminster, S. W.

Lyster, George Fosbery, M. Inst. C. E., Dockyard, Liverpool.

McDonnell, Alexander, M. Inst. C. E., Past Pres. Inst. C. E. I., 28 Victoria Street, Westminster, S. W.

Mair, John George, M. Inst. C. E., M. of C. Inst. Mech. Eng., 101 Grosvenor Road, S. W.

Mann, G. O., M. Inst. C. E., Hollington Park, St. Leonard's-on-Sea.

Manning, J. R., M. Inst. C. E., 9 Bridge Street, Westminster, S. W.

Manning, Robert, M. Inst. C. E., Past Pres. Inst. C. E. I., Office of Public Works, Dublin.

Mansergh, James, M. of C. Inst. C. E., 5 Victoria Street, Westminster, S. W.

Mappin, Sir Frederick Thorpe, Bart., M.P., Assoc. Inst. C. E., 28 Prince's Gate, S. W.

Marley, John M. Inst. C. E., Pres. North of England Inst. Mining and Mech. Eng., Thornfield, Darlington.

Marshall, Francis Carr, M. Inst. C. E., M. of C. Inst. Naval Architects, Pres. Northeast Coast Inst. Eng., Messrs. Hawthorn, Leslie & Co., Newcastle-on-Tyne.

Marshall, William Prime, M. Inst. C. E., late Sec. Inst. Mech. Eng., 15 Augustus Road, Birmingham.

Marten, Edward Bindon, M. Inst., C. E., M. of C. Inst. Mech. Eng., Pedmore, near Stourbridge.

Marten, Henry John, M. Inst. C. E., The Birches, Codsall, near Wolverhampton.

Martin, Edward Pritchard, M. Inst. C. E., M. of C. Inst. Mech. Eng., Vice-Pres. Iron and Steel Inst., Pres. South Wales Inst. Eng., Dowlais Iron Works, Glamorgan.

Martindale, Colonel Ben Hay, C.B., R. E., Assoc. Inst. C. E., Overfield, Bickley, Kent.

Matheson, Ewing, M. Inst. C. E , 32 Walbrook, E. C.

Myers, W. Beswick, M. Inst. C. E., 14 Victoria Street, Westminster, S. W.

Noble, Captain Andrew, C.B., F.R.S., late R A., M. Inst. C. E., Elswick Works, Newcastle-on-Tyne.

Noble, John, Assoc. Inst. C. E., Midland Ry., Derby.

Oakley, Henry, Assoc. Ins. C. E., Great Northern Ry., King's Cross, N.

Pain, Coard S., Assoc. Inst. C. E., Past Pres. Liverpool Eng. Soc., 14 North John Street, Liverpool.

Parker, William M. Inst. C. E., M. of C. Inst. Naval Architects, 2 White Lion Court, Cornhill. E. C.

Parsons, Hon. Charles A., Assoc. M. Inst. C. E., Elvaston Hall, Ryton-on-Tyne.

Pidgeon, D., Assoc. Inst. C. E., Holmwood, Putney Hill, S. W.

Pole, Dr. William, F.R.S.S. L. and E., Hon. Sec. Inst., C. E., 31 Parliament Street, Westminster, S. W.

Potts, John J., Assoc. M. Inst. C. E., Vice-Pres. Liverpool Eng. Soc., 296 Conway Street, Birkenhead.

Preece, William Henry, F.R.S. M. of C. Inst., C. E., Past. Pres. Inst. Elec. Eng. Gothic Lodge, Wimbledon, S. W.

Price, John, M. Inst. C. E., M. of C. Inst. Naval Architects, M. of C. North-east Coast Inst. Eng. 6 Osborne Villas, Jesmond-on-Tyne.

Price, John, Assoc. M. Inst. C. E., M. of C. Liverpool Eng. Soc., Surveyor's Office, Toxteth Park, Liverpool.

Provis, Thomas B., Assoc. M. Inst. C. E., 76 Finsbury Pavement, E. C.

Ramsbottom, John, M. Inst. C. E., Past Pres. Inst. Mech. Eng., Fernhill, Alderley Edge, Cheshire.

Ramsden, Sir James, M. Inst. C. E., M. of C. Inst. Mech. Eng., Vice-Pres. Inst. Naval Architects, Vice-Pres. Iron and Steel Inst., Barrow-in-Furness.

Ransome, A. M. Inst. C. E., 26 The Boltons, S. W.

Ransome, Frederick, Assoc. Inst. C. E., Rushmere Lodge, Norwood Lane, S. E.

Rawlinson, Sir Robert, K. C. B., M. of C. Inst. C. E., Vice-Pres. Society of Arts, 11 The Boltons, S. W.

Reid, James, M. Inst. C. E., Past Pres. Inst. Eng. Scotland, 10 Woodside Terrace, Glasgow.

Reid, R. Carstairs, M. Inst. C. E., 72A George Street, Edinburgh.

Rendel, Sir Alexander Meadows, K.C.I.E., M.A., Past. M. of C. Inst. C. E., 8 Great George Street, Westminster.

Rennie, George Banks, M. Inst. C. E., 20 Lowndes Street, S. W.

Richards, E. Windsor, M. Inst. C. E., M. of C. Inst. Mech. Eng., Vice-Pres. Iron and Steel Inst., Low Moor Iron Works, Bradford, Yorks.

Riches, Tom Hurry, M. Inst. C. E., M. of C. Inst. Mech. Eng. Vice-Pres. South Wales Inst. Eng. Taff Vale, Ry., Cardiff.

Salomons, Sir David Lionel, Bart., Assoc. Inst. C. E., M. of C. Inst. Elec. Eng., Broomhill, Tunbridge Wells.

Samuelson, Sir Bernhard, Bart., F.R.S., M.P., M. Inst. C. E., Past Pres. Iron and Steel Inst., 56 Prince's Gate, S. W.

Sandberg, C. P., Assoc. M. Inst. C. E., 19 Great George Street, Westminster, S. W.

Scott, Maj.-Gen. A.-de-C., late R. E., 40 Chancery Lane, W. C.

Scott, John, C.B., M. Inst. C. E., M. of C., Naval Architects, Cartsdyke, Greenock, N. B.

Seaton, Albert Edward, Wh.Sc. M. Inst. C. E , M. of C. Inst. Naval Architects, Earle's Shipbuilding Co., Hull.

Sennett, Richard, Wh.Sc. M. Inst. C. E., M. of C. Inst. Naval Architects, Admiralty, S. W.

Shand, James, M. Inst. C. E., 75 Upper Ground Street, Blackfrairs, S. E.

Shaw, Professor, Henry Selby Hele, Wh.Sc., M. Inst. C. E., M. of C. Liverpool Eng. Soc., University, Liverpool.

Shelford, William, M. of C. Inst. C. E., 35A Great George Street, Westminster, S. W.

Siemens, Alexander, Assoc. M. Inst. C. E. Vice-Pres. Inst. Elec. Eng 12 Queen Ann's Gate, Westminster, S. W.

Smith, Josiah Timmis, M. Inst. C. E., Past Pres. Iron and Steel Inst., Rhine Hill, Stratford-on-Avon.

Spagnoletti, Charles Ernest Paolo Diana, M. Inst. C. E., Past Pres. Inst. Elec. Eng., Great Western Ry., Paddington, W.

Stalbridge, Right Hon. Lord, As oc. Inst. C. E., 12 Upper Brook Street, W.

Sterne, L., Assoc. Inst. C. E., 28 Victoria Street, Westminster, S. W.

Stevenson, David Alan, B.Sc., F.R.S.E., M. Inst. C. E., Vice-Pres. Scottish Society of Arts, 84 George Street, Edinburgh.

Stevenson, Francis, M. Inst. C.E., London and Northwestern Ry., Euston, N.W.

Stileman, Francis Croughton, M. of C. Inst. C. E., 23 Great George Street, Westminster, S. W.

Stirling, James M. Inst. C. E., South Eastern Ry., Ashford.

Stoney, Bindon Blood, LL.D., F.R.S., M. Inst. C. E., Past Pres. Inst. C. E. I., 14 Elgin Road, Dublin.

Stroudley, William, M. Inst. C. E., London, Brighton and South Coast Ry., Brighton.

Tarbutt, Percy, M. Inst. C. E., 23 St. Swithin's Lane, E. C.

Thomson, Sir William, F.R.SS. L. and E., LL.D., M. of C. Inst. C. E., Pres. Elec. Eng., University, Glasgow.

Thornycroft, John Isaac, M. Inst. C. E., M. of C. Inst. Naval Architects, Eyot Villa, Chiswick Mall, S. W.

Thorpe, R.H., Assoc. M. Inst., C. E., American Elevator Co., 4 Queen Victoria Street, E. C.

Trewby, George Careless, M. Inst. C. E., Gas Light and Coke Co., Horseferry Road. S. W.

Turner, J. H. T., Assoc. M. Inst., C. E., Hon. Sec. Liverpool, Eng. Soc., 14 North John Street, Liverpool.

Twededll, Ralph Hart, M. Inst. C. E., 14 Delahay Street, Westminster, S. W.

Tyndall, Professor John, LL.D., F.R.S., Hon. M. Inst. C. E., Hind Head House, Haslemere.

Unwin, Professor William Cawthorne, B.Sc., F.R.S., M. Inst. C. E., 7 Palace Gate Mansions, Kensington, W.

Walker, Benjamin M. Inst. C. E., M. of C. Inst. Mech. Eng., Leeds.

Wallis, George A., M. Inst. C. E., 14 Sea Side Road, Eastbourne.

Webb, Francis William, M. Inst. C. E., London and North Western Ry., Crewe.

Webber, Maj.-Gen. Charles Edmund, C.B., late R. E., Assoc. Inst. C. E., Past Pres. Inst. Elec. Eng., 17 Egerton Gardens, South Kensington, S. W.

Webster, John J., M. Inst. C. E., Past. Pres. Liverpool Eng. Soc., 67 Lord Street, Liverpool.

West, Henry Hartley, M. Inst. C. E., M. of C. Inst Naval Architects, Vice-Pres. Liverpool Eng. Soc., 14 Castle Street, Liverpool.

Westmacott, Percy Graham Buchanan, M. Inst. C. E., Past Pres. Inst. Mech. Eng., Benwell Hill, Newcastle-on-Tyne.

Whitaker, W., B.A., F.R.S., Assoc. Inst C. E., 33 East Park Terrace, Southampton.

White, George F., Assoc. Inst. C. E., 1 Porchester Gate Hyde Park, W.

White, William Henry, C.B., F.R.S., M. Inst. C. E., Vice-Pres. Naval Architects, Admiralty, S. W.

Wicksteed, Joseph Hartley, M. Inst. C. E., M. of C. Inst. Mech. Eng., Well House Foundry, Leeds.

Williams, Edward Leader, M. Inst. C. E., Ship Canal Office, Manchester.

Wood, Lindsay, M. Inst. C. E., Past Pres. North of England Inst. Mining and Mech. Eng., Southill, Chester-le-Street.

Woodall, Corbet, M. Inst. C. E., 9 Bridge Street, Westminster, S. W.

Woods, Edward, Past Pres. Inst. C. E., 6 Victoria Street, Westminister, S. W.

Worsdell, Thomas William, M. Inst. C. E., M. of C. Inst. Mech. Eng., North Eastern Ry., Gateshead-on-Tyne.

Worthington, S. B., M. Inst. C. E., Princess Street, Manchester.

Yarrow, Alfred Fernandez, M. Inst. C. E., M. of C. Inst. Naval Architects, Isle of Dogs, Poplar E.

This was accompanied by the following circular letter from Mr. James Forrest, which, together with a list of the members of the Institution, was sent to all the party:

THE INSTITUTION OF CIVIL ENGINEERS,
25 Great George Street, Westminster, S. W.
April 10, 1889.

Dear Sir:—It gives me pleasure to send to all passengers by the *City of Richmond* and *City of New York*, whose names and addresses have been furnished to me, a list of the Reception Committee composed *exclusively* of members of all classes of this Institution—appointed to make arrangements for their visit to this country in June. Should you find the names of any personal friends on the Committee, you may possibly like to write to them as to your movements.

A copy of our current list of members is also sent as it may possess some interest.

I remain, yours faithfully,
JAMES FORREST,
Secretary.

It was early found by a number of those who had paid their passage, that business or other reasons would prevent their going with the party, but the numbers who still sought accommodation on the steamer was so large that no difficulty was found in disposing of their tickets at full rate, and this process of exchanging through the Society's office was kept up until within eight hours of the time of sailing. There was also supplied to each member of the party gummed labels, to be affixed to his luggage, and thereby distinguish it, and to facilitate customs routine. These pasters bore the words "American Engineers, 1889."

Just before the party embarked the following letter was sent to every one by Mr. Forrest:

THE INSTITUTION OF CIVIL ENGINEERS,
25 Great George Street, Westminster, S. W.
May 4, 1889.

Dear Sir:—I am directed by the President, Council, and other Members of this Institution to request the honor of your company at dinner on Thursday, the 13th of June, at 6.30 for 7 P. M. precisely. The dinner is to be given in the Guildhall of the City of London, which has been kindly placed at the disposal of the Institution, by the express sanction of the Right Hon. the Lord Mayor, Aldermen and Commons of the City of London in Common Council assembled, for the purpose of entertaining the members of the different American Engineering Societies who will then be in London.

An early answer will oblige. Evening dress will be observed. In case this invitation is accepted, a formal card will await your arrival in this country.

I am, yours faithfully.
JAMES FORREST,
Secretary.

It was appreciated at the time that a very unusual courtesy was thus extended, but its full significance was not realized until the party reached London. It had been found advisable to retard the arrival of the party at that city until the close of the Whitsun-tide holidays which are celebrated in England by the suspension of work in many manufacturing establishments, and therefore it was suggested that the few days between the arrival of the steamer and the end of those holidays should be spent by the party in trips through the rural and historic interests of England. The London & Northwestern Railway which had already tendered free transportation from Liverpool to London, to the members of the Engineering Societies, issued a circular giving a choice of tours in England, and a similar circular was issued giving the tours over the Midland Railway, which were furnished through Cook's Tourist Agency. The members were in part requested to make their choice of these tours before sailing, but practically a decision was not by many reached until they arrived at Queenstown.

Just before the *City of Richmond* sailed, the Council of this Society in conference with representatives of the Mining and Civil Engineers, arranged for the formation of a Joint Executive Committee of the three Societies, which should be the channel through which the hospitalities of the English hosts should reach the party at large. The organization of this Committee, however, was not perfected until the party in the two ships

reached Liverpool, and came to an agreement there. The list of those who constituted this Committee appears in the sequel.

The steamer *City of Richmond* sailed from New York, with its full complement of passengers, at 3 P.M. on Saturday, May the 25th; the *City of New York*, of the same line, containing an overflow of this party and those who had connected themselves with it through the Society of Civil Engineers, sailed the Wednesday following, May 29th.

II.—The Transatlantic Voyage.

The party on the *City of Richmond* was a unique one, inasmuch as it was homogeneous to begin with, and there was no delay in the formation of acquaintances. The officers of the ship remarked on the singularly pleasant nature of the company from their standpoint, and probably no one has ever made an ocean voyage with the same social pleasure as was the lot of those making up this party. After the first day or two of discomfort the amusements usual to ocean voyages were begun, and were kept up until the vessel reached Queenstown. In addition, however, there were frequent meetings of the party in the saloon for the purpose of deciding on questions which must be met, and for the formation of such lists of the members and of their probable tours as would be immediately required by the hosts in England upon the arrival of the vessel. The question also had to be met at this point as to what were the privileges of those in the party not members of the engineering societies, who accompanied it as the guests of members. It was decided almost immediately that, inasmuch as the entire party were themselves guests of their English friends, the members of the engineering societies could not properly ask any extension of hospitality outside of their own members; that in all excursions under their own control their guests would be included; and that they hoped such guests might be included in *all* excursions, but, obviously, could not request additional favors for them from their hosts.

The rather unusual relaxations on the vessel, beside the conventional ring-toss and shuffle-board games, included a tug-of-war contest, and an initiation, which was much enjoyed by those well enough to participate in it. The leading parts were as follows:—

Illustrious King Neptune.....Mr. Tilden
Grand Senior Counsel.....Mr. Hunt

Grand Junior Counsel.....Mr. Woodbury
Grand Chaplain.....Mr. Stetson
Grand Master of Ceremonies.....Mr. Robb
Grand Marshal.....Mr. Fairbairn
Grand Senior Bouncer.....Mr. Hibbard
Grand Junior Bouncer.....Mr. Goss

The victim was Mr. Fowler, whose capacities as an athlete added much to the picturesqueness of the performance. Costumes and accessories were made ready from the resources of the ship, and the captain and officers joined the merry-makers in the saloon. Much amusement was afforded to those in the secret by the consternation of some outside the ringleaders lest a violent initiation directed at them should upset a digestive calm not yet assured. Addresses in costume and pantomime were the principal features, the acts in the drama being separated by singing from a quartette which developed itself from among the party. Mr. Fowler was finally and publicly recognized as having attained the degree of Old Salt in the Illustrious Order of Neptune, and was taught certain mystic pass-words, grips, and signs. This entertainment was held on Friday evening, May 31st.

III.—Entertainment in England.

The steamer *City of Richmond* reached the Mersey and Liverpool on the afternoon of Tuesday, June 4th; but already the hospitable intent of our hosts had shown itself, when, on Monday, at Queenstown, the first representatives of the English engineers had boarded the steamer. When the vessel reached its anchorage at Liverpool a large deputation was upon the tender, pressing forward to give their first greetings to their guests. This welcome came from a sub-committee of the Liverpool Reception Committee, headed by Mr. Alfred Holt, its chairman (reputed to be the largest individual ship-owner in the world), Mr. Daglish, and Mr. West. Mr. Holt made a brief address of welcome, which was acknowledged by Mr. Towne, on behalf of our party.

The morning of the first day was largely taken up in preparations for travel, and in routine and other matters relating to the organization of the party. So important and pressing were these latter that a room in the hotel centre was secured as a headquarters where the unforeseen amount of clerical labor of such organization could be attended to.

On Wednesday afternoon, the party divided into two groups,

one being taken to see the Liverpool end of the Manchester Ship Canal Works; while the other party, in which were most of the visiting ladies, proceeded to Knowsley, the country seat of the Earl of Derby.

On Thursday, June 6th, the other portion of the party having arrived on the steamer *City of New York* early in the morning, again two alternate excursions were offered to the visitors, the first being that to the Mersey Docks and Harbor Estate. The group formed at the Herculaneum Dock, passing through the Graving Dock, along Harrington Toxteth Dock, and so to the Coburg Dock Pumping Station. Thence the party proceeded to the Waterloo Dock grain warehouses, Sandon and Langton Graving Docks, and thence to the Alexandra. On the steamer *Lancashire*, which conducted the party for this transfer, luncheon was served at the invitation of the Liverpool Reception Committee. After luncheon the party visited the Birkenhead Docks, the Graving Docks, and so back to the landing-stage, where conveyances took the party to their hotels. As the boat conveying the party passed along the harbor the very unusual courtesy was shown to the visitors of having the ships dressed as for review. The alternate excursion went to Messrs. Laird & Brothers' Birkenhead Iron Works and the Mersey Tunnel Railway. After a visit to these very extensive works—building torpedo and other vessels, boilers, etc.—they visited the Hamburg and American Steam Packet Company's steamer *Columbia*, whence conveyances took them from Birkenhead Park to the Town Hall, where they were received by the Mayor. Thence the same conveyances took them to the private residence of Mr. and Mrs. William Laird, in Hamilton Square, where luncheon was served to the guests, and afterward a photograph taken of the group in front of the mansion. After luncheon the party went to the Hamilton Square Station, examined the hydraulic lift arrangements and engines, visited the pumping and ventilating station, and thence down the sub-way to the station platform. Thence through the tunnel to the James Street Station in Liverpool, where conveyances as before returned the party to their hotels. All transportation for the party was complimentary through the entire day. In the evening a conversazione, including music, dancing, and a supper, was held in the beautiful Town Hall of Liverpool by the Mayor of the city, Mr. E. H. Cookson, and a large party of the leading citizens were invited to meet the visitors. Besides the permis-

sion to visit Knowsley, the seat of the Earl of Derby, Croxteth, the seat of the Earl of Sefton, and Speke Hall, the residence of Miss Watt, were arranged to be opened to the visiting party, and they were also given the *entrée* of the Conservative, Exchange, Palatine, and Reform clubs, and also the Exchange News Room. A most satisfactory map of Liverpool and Birkenhead, showing the Docks and Harbor Estate, was especially prepared for the visitors, and was bound up in the pamphlet programme which was distributed to all participating. Besides the public entertainments, at 6 o'clock on this day a small dinner was given by Sir John Coode, K.C.M.G., President of the Institution of Civil Engineers, at the Northwestern Hotel, to six or eight of the officers of the visiting party, as many members of the Institution, and several members of the Liverpool Committee—in all, about twenty attended.

The arrival of the party in England took place, as has been said, just at the interval when the Whitsun-tide holidays would interfere not a little with the success of the professional visits which the English hosts had planned for their guests. The plan was therefore carried out by most of the party to spend the days from Friday, June the 7th, to Wednesday, June the 12th, in provincial and rural England. There were, in the main, three itineraries followed: The first tour was called the North Wales tour, the second was the English Lakes tour, and the third was the Birmingham, Warwick, Stratford, and Oxford tour.

The North Wales party left Liverpool for Chester, driving to Eton Hall, the residence of the Duke of Westminster, arriving at Llandudno, the great Welsh watering-place, in the evening, driving around the great Orme's Head to the Conway Castle and spending Sunday at charming Bettys-y-coed. Monday was devoted to a coaching trip, to the narrow gauge railway, and through the mountain pass to Llanberis; from Llanberis to Carnarvon, and to the Menai Bridges, Stephenson's Britannia Tubular and Telford's Suspension Bridge; thence through Crewe and so to London.

The second party took the English lake district trip, went by rail to Keswick, from Keswick by coach to Grasmere, Windermere, and so to Bowness, spending Sunday at that place; from Bowness to Barrow-in-Furness and Furness Abbey, thence to Kenilworth, Warwick, Leamington, and Stratford, and thence to London.

The third party, which was, perhaps, the most popular, and was elected by the greatest number, involved a visit to Manchester, Crewe, and Birmingham, in addition to the historic points. This party was received at Crewe station by Mr. F. W. Webb, the mechanical engineer of the London & Northwestern Road, a band at the offices of the company playing national airs, while recent locomotives of Mr. Webb's design were moved along the line, and on the side track was a long line of the different types of engines built by the shops. An elaborate luncheon was served in the great drawing office, Mr. J. B. Bickersteth, Vice-Chairman of the road, being in the chair. The locomotive works are supplied with raw material from other shops of the company through which also the party was conducted in the afternoon. The ladies, meanwhile, had been entertained at afternoon tea at the house of Mr. Webb.

Mr. J. F. Aspinall, of the Lancashire and Yorkshire Railway, had given a most cordial invitation to the party to visit the new shops of that line at Horwich. This was one of the newest railway plants in England, and was much enjoyed by those who visited it. Luncheon was served at the works and the party were then by special train conveyed to Manchester, where they joined the party from Crewe. In Manchester the party visited Owen's College, the Lancashire and Yorkshire Car Works, the Salford Corporation Sewage Works, and a number of other establishments. In the evening a reception was tendered to them by the Mayor of Manchester, and the party sat down to a most enjoyable banquet as the guests of the Reception Committee of the Manchester Engineers, of which Mr. William Bradford was President. The Mayors of Salford, Oldham, and Stockport assisted the Mayor of Manchester. Here, as at all the other reunions, speeches and toasts were the feature of the close of the entertainment.

The next morning was devoted to a visit to the Manchester Ship Canal Works; thence to Chester and so through Warwick, Stratford, and Kenilworth to Oxford, and thus to London.

It will be thus seen that the various sub-divided groups assembled in London on the evening of Wednesday, June the 12th. On Thursday, June the 13th, a special Choral service was held at Wesminster Abbey, followed by an address by Dean Bradley in the chapel of Henry VII., on the sacred and historical associations of the Abbey. At noon, a visit to the

Houses of Parliament was arranged, the general public being only admitted to these buildings on Saturday afternoons under ordinary circumstances. In the afternoon, a formal reception was tendered by the Institution of Civil Engineers, 25 Great George Street, at which there was presented to the visiting engineers an address from the Institution. The speech of presentation was delivered by Sir John Coode, K.C.M.G., President of the Institution, and to this Professor R. H. Thurston, Ex-President of this Society, made a suitable response. In the evening, the dinner given by the Institution of Civil Engineers to their American visitors was held in the Guildhall of the City of London by the express sanction of the Lord Mayor, Aldermen, and Court of Common Council of the City of London. This mark of courtesy was a particularly striking one, inasmuch as a similar courtesy had been extended but once before to any non-municipal visiting party to London. This dinner was marked by addresses from Hon. Robert T. Lincoln, Minister to England; Sheriff Newton and Sir John Coode among the hosts, and Mr. D. J. Whittemore, H. R. Towne, A. E. Hunt, Elihu Thomson, and T. C. Clark of the guests. These speeches were interspersed by music from a quartet.

On Friday morning the party was divided into three groups for easy handling, the first party visiting the docks, East and West India, Victoria, and Albert, whence they went to the Beckton Gas Works where luncheon was served, and from thence to the Metropolitan Main Drainage and Sewage Purification Works at Barking.

The second party left the stairs at Westminster Bridge and went first to the foundation and piers of the Tower Bridge in process of erection; thence to the Marine Engine Works of Humphreys, Tennant & Co. at Deptford Pier, and from there to luncheon at the Ship Inn at Greenwich, where whitebait is the great specialty. They also visited the Naval Museum and the painted hall of the Greenwich Hospital, and thence to the ship-building and torpedo vessel yard of the Yarrow Brothers at the Isle of Dogs. Besides the visit to the ships and yard the Engineers were taken a short excursion at full speed on one of the latest torpedo boats, to observe the wonderful facility with which they are handled. After an inspection of the Dock and Freight Plant of the North London Railway at Poplar the party were returned to London.

The third party went first to the Marine Engine Works of

J. & G. Rennie, Blackfriars; thence to a plant of the London Hydraulic Power Company, and the works of Peter Brotherhood and the works of Maudslay, Field & Co. The Hydraulic Company supply water under pressure for hydraulic machinery; from there to the Metropolitan Main Pumping Station, and thence to Lambeth Palace. In the Chapel of the Palace the party were received by Dr. Benson, Archbishop of Canterbury, who addressed them in fitting and kindly words. From here the engineers and ladies went to the Doulton Potteries, and through the art studios which are a part of the factory, and thence to their homes.

On Saturday a special train conveyed the party to Windsor Castle and its interesting and historic grounds. By special invitation and consent of Her Majesty Queen Victoria, rooms in the building, which are not opened to the public, were made accessible to the visitors as well as those other parts of the immense pile which are ordinarily seen. After the visit to the Chapels, State Apartments, Mews and Towers, luncheon was served in the Hall of the Albert Institution in Windsor-town. The Mayor and other civic officers were present at the President's table, together with the officers of the Societies.*

After luncheon the party were taken in open carriages through the Windsor Great Park and the Long Walk which make such a beautiful surrounding to the Castle of Windsor. Others of the party, instead of taking the Windsor drive, were present by invitation at the lawn party given by Mrs. S. B. Boulton, where the "Mid-Summer Night's Dream" was most enjoyably performed. It was the case here, as nearly everywhere else, that each who went on one excursion commiserated those unfortunates who had chosen the other alternative.

In the evening Lord Brassey, well known to all American readers as the owner of the yacht "Sunbeam," gave a reception at his private house in Park Lane, where, besides the social charm, the beautiful collection of curios gathered on his voyages and most tastefully arranged in his museum, was thrown open to the visiting guests, and their ears delighted by national music from a group of Spanish performers. On Sunday the inexhaustible courtesy of our hosts had shown it-

* It will be understood by those present at this luncheon how strong is the constraint which forbears a personal allusion at this point. But the experience will not be forgotten by one of the party.

self by procuring special tickets of admission to places of worship at which there is ordinarily a difficulty of access. Some attended the Old Temple Church, others in Westminster; others again at the Foundling Hospital services; others went to Lincoln's Inn Chapel and the Metropolitan Tabernacle, to which their special privileges admitted them, and for still another group a special visit to the Zoological Gardens was arranged.

On Monday morning the Queen's permission permitted the Chamberlains to admit the party to St. James' Palace, Buckingham Palace and the Royal Mews. At St. James' Palace the time of the visit was so arranged that we were there at the guard mount, and the splendid band paid its visitors a compliment by playing American airs during their stay. At Buckingham Palace also we were allowed access to the rooms which are only entered by the Queen's own subjects on the occasions of drawing-rooms or similar social or privileged occasions. In the afternoon the Baroness Burdett-Coutts gave a reception at her grounds, Holly Lodge, Highgate, at which a number of notables in London Society were present as well as those eminent in scientific circles. The day was the most perfect one of English June, and two orchestras (one the Coldstream Guards) in different parts of the grounds supplied most delightful music alternately during the entire afternoon.

On Monday evening in the Theatre of the Institution of Civil Engineers an official re-union of the party was held to pass resolutions of thanks, by which they attempted to convey to their hosts something of the obligation which all felt they had incurred. These resolutions appear at the close of this account.

On Tuesday there were two alternate parties, one going by special train furnished by the London and Southwestern Railway to Hampton Court; thence by barge up the Thames (the barge of the Corporation of London) to the water works of the companies supplying water to London; thence, after a luncheon served on the boat in the most delightful style, down through the lock to Hampton Court Palace and after a visit to its galleries, gardens and grounds, including, as elsewhere, parts of the palace premises usually closed to public visitors, the party returned either by the special train or through the courtesy of one of our hosts, by fast steam launches down the Thames to Richmond, and so home by train. This sail down

the Thames in the evening-light of a perfect June day is an experience which will linger long in memory.

The other party went to Wimbledon to inspect the sewage disposal works of the local Board at that point; thence to the engine works of Messrs. Willans & Robinson where luncheon was served by invitation of the firm, and afterwards this group joined the Hampton Court group for the palace visit, and returned either by train or by Messrs. Robinsons' launches with the first group.

On Wednesday there were three alternative plans; to visit the freight warehouses of the London and Northwestern Railway Company at Camden, or similar visits to the Midland Railway Company's works, or to the iron tunneling works of the London and Suffolk Sub-way. Thence the three parties went together to the London Electric Supply Corporation's Works, where luncheon was served at Deptford and in the afternoon to the flower show at the Royal Botanical Society in Regent's Park. In addition to these parties of large size, smaller parties were arranged to accept the invitations which had been given them by Mr. Pope, Treasurer of the Middle Temple, who carried a party over that most interesting series of buildings and entertained them at luncheon. Professor Tyndall also entertained a small and select group at his house in the suburbs of London at luncheon, and Professor Bauerman arranged to make himself the leader of a party interested in mineralogy at the British Museum and at the Geological Museum in Jermyn Street. Besides this, Sir Henry Bessemer was in attendance at Messrs. Ford & Wright's Diamond Cutting and Polishing Works, and gave personal attention to those who selected this as one of their objective points. During their stay in London the visitors were made honorary members of the White Hall Club in Westminster. Invitations were also received to be present at the conversazione given in South Kensington by the Society of Arts on the week following that upon which they left for Paris.

On Thursday morning from the Victoria Station, a special train conveyed the party to Dover on its way to Paris. The party was accompanied by the President, Secretary and several leading members of the Institution of Civil Engineers, and on the pier at Dover a brass band gave a parting salute to the visitors by the continued performance of American airs. The party bade farewell to the English shore with hearty and prolonged cheers for those who had done so much for their

pleasure. The trip from London to Paris was a complimentary matter from the directors of the London, Chatham and Dover Railway, and the Northern Railway of France through the efforts of Mr. William Forbes and Mr. A. Sartiaux. Arriving at Calais, after a splendid passage in one of the Company's largest steamers (*The Empress*), although a few unfortunates were compelled to the ordinary obeisances to the demands of Neptune, we were here again welcomed by our second series of devoted hosts, and the entertainment in France may be said to have begun.

IV.—Entertainment in France.

On the Calais pier were Messrs. A. Brüll and Gottschalk, past Presidents of the Society of Civil Engineers of France, and several of the Vice-Presidents, accompanying Mr. Chanute and Mr. Pontzen, who are members of the American Society of Civil Engineers, and who had done much to arrange for the arrival of the party. On their way to the capital from Calais each member of the party received a silver badge as a decoration, which was worn by everyone during the entire stay. Between Calais and Paris a stop was made at Arques to inspect the hydraulic lift which there replaces the use of a lock for the canal; but the train had to pass by without stopping at the Harbor Works at Calais on account of pressure of time.

On Friday the courtesy of permitting the engineers to rest after the journey without assignment of special excursions, was a further evidence of the considerate thoughtfulness of our hosts.

On Saturday morning, in the parlor of the Civil Engineers of France on the first floor of the Machinery Palace at the Exposition, the members of the society were presented to Mr. G. Eiffel, President of the French Society, and after an address of welcome by Mr. Eiffel, and a reply by Mr. Chanute, the party were escorted to the base of the Eiffel tower and were taken in successive lifts to the upper platform. On the return to the first stage a luncheon was served in the restaurant Brébant, at the close of which there were further expressions of welcome from the hosts and of pleasure from the guests. For the afternoon, members of the French Society divided themselves into seven groups, respectively, Mining, Metallurgy, Machinery and Spinning, Iron and Copper and Sugar Works, Railways, Electricity, and Public Works, and the party were by these experts conducted to the parts of the Exposition where the most striking examples were to be seen.

On Sunday, while a number visited the historic churches of Paris, a portion of the party accepted the invitations to take a trip to Versailles and St. Cloud, and see the play of the great fountains which are in action only upon that day.

On Monday morning there were four groups, two to visit the sewers of Paris, a third to the Gobelin Tapestry Works and to the hospital of M. Pasteur with its collection of specimens of microbiology, and his methods of inoculation for rabies. The fourth group had the *entrée* to the Paris Observatory, to Pasteur's Hospital, and to the Ecole des Mines. In the afternoon there were visits planned to the works of the General Company of Paris Cabs, their laboratory and stations, and to the General Omnibus Company. There was also an excursion this afternoon to the Compressed Air Works of the Parisian Compressed Air Company, employing the system of Mr. Popp. At the close of this latter professional visit an entertainment was given to a few of the party by the president of that company in the Bois de Boulogne.

On Tuesday there were two visits in the morning, the first to special points of interest in the Exposition, and the second to the Sewage Works at Gennevilliers and the Sewage Farm. In the afternoon the Historical Museum of the City of Paris, the Conservatory of Arts and Metiers, the Hotel des Invalides, and the Jardin des Plantes were all included. On the evening of Tuesday a complimentary dinner was tendered to Mr. Henry R. Towne, President of the Mechanical Engineers and Chairman of the Executive Committee, by the latter body as a recognition of their indebtedness to his energy and capacity in presiding over the interests of the joint party.

On Wednesday visits to the Hotel de Ville or City Hall, the Hotel de Cluny, with its antiquities, the National Library, and the National Manufactory of Sèvres china filled up the day. In the evening a general meeting of the excursionists was held in the rooms of the French Civil Engineers, for the passage of resolutions expressive of their indebtedness for all that the French hosts had done; these also are reproduced in the sequel. In addition to the provision of the elaborate programmes, the entire building of the Civil Engineers had been put at the service of the visiting guests, and they were asked to make use of it during their stay as a headquarters.

On Thursday M. Paul Decauville aîné invited the party to visit his railroad works at Petitbourg, and in the evening a favored few, by invitation, occupied the private box at the Grand Opera which

is set aside for the President of the Republic. M. Carnot was not himself present, but was the instigator of this enjoyable courtesy. He had also given an audience to a select deputation at his palace in the Champs Elysées, and a similar attention was shown by the Préfect of the Seine, whose position corresponds somewhat to that of the Mayor of an American city. There was also an address delivered to the party in the City Hall by representative gentlemen selected from the French House of Deputies, and at its close, after an eloquent response by Mr. De Garay of the visiting engineers, a little luncheon was served in the anteroom.

On Saturday the Minister of Public Works of France, Mr. Yves Guyot, gave a ball at which it was the intention that a large number of the visiting members should be present, and the regular musicale on Sunday afternoon at the palace of President Carnot was also made an occasion for a further courtesy.

On Monday, June 30th, the party planning to extend its journey by a visit to those points in Germany which had been put at their service by courtesy of German hosts, left Paris for the Rhine. Quite a number of others, however, remained in Paris, and already a small number had found it necessary to begin their journey homeward. Special reference should be made to the courtesies which were enjoyed in Paris at the hands of Mr. Eiffel, Mr. Brüll, and Mr. de Dax, the Secretary or General Agent of the French Society of Engineers.

V.—The Entertainment in Germany.

At the close of the stay in Paris, the invitation to make the trip in Germany was conveyed to the party, both by letter and by the presence of Mr. E. Schroedter. There were only about forty of the engineers, with their ladies, who left the station of the Northern Railway on their way to Aix La Chapelle. Others had gone to Liege, others to Brussels, and a few to Stenay.

On Tuesday morning the party visited the Rothe Erde Works, one of the most profitable of the basic Bessemer establishments, and after making the round of the works, a collation was served in the office building, with speeches both by the English and German linguists.

From here they went to the Zinc and Lead Works at Stolberg. This was a carriage drive, and while the gentlemen were enjoy-

ing this hospitality, the ladies were taken in charge by Mr. Parker, the American Consul at Aix La Chapelle, who conducted them around to points of interest in the venerable town.

Later in the day, the combined parties reached Düsseldorf. Wednesday morning the party inspected the double shaft of the Colliery Zollverein, and after luncheon, tendered by the Messrs. Hanniel, the party left for Galsenkirchen.

At Galsenkirchen the party divided itself into two groups, one putting itself under the guidance of Messrs. Theodore Möller and Hüssener, to inspect the coal distillation at Bulnke, and the second group visiting the Works Schalkengruben and Hütten Verein, under the guidance of Mr. F. Burgers, the General Manager. A small group went also to Oberhausen on the Ruhr. The last two were blast-furnace plants, steel works, and rolling mills.

Returning to Düsseldorf, a Conversazione was offered in the Zoological Garden by the Bezirksverein of the German Engineers of the Lower Rhine. A welcome was given to the party by Mr. R. M. Darlen, to which Mr. Oberlin Smith of the Society responded. An *al fresco* meal was served at long tables. An invitation was given the party also by Mr. Herbertz to visit Cologne.

After supper an illumination was enjoyed, and the party returned to the ball-room for a dance.

On Thursday the party left for the Rhine Steel Works, Miderich, near Ruhrort. Besides there was one to visit the forges, rolling-mills, foundries, cast-steel works, coke ovens, coal-mines, furnaces, and gas-engines, at least twenty-five establishments sending invitations to the party. On both the Düsseldorf days, while the gentlemen of the party were on professional matters intent, the ladies enjoyed visits to famous art galleries of that city, visiting also some studios of the artists themselves. On the evening of the 4th of July a complimentary banquet was given by the iron-masters and colliery proprietors to their American guests. The hall was profusely decorated, and the first toast was the Emperor and President. At the close of the banquet there was dancing.

On Friday an early start was made to Cologne, admitting of a visit to the great cathedral, and from there to Coblentz by the train, where the party were officially received by Herr Spaeter, an official of the city.

The party, by this time numbering two hundred, were driven

in carriages to the castle of the Empress Augusta, the widow of the Emperor Wilhelm I.

A deputation, consisting of Messrs. Oberlin Smith, Walter Wood, and Charles Kirchoff, were affably received by the Empress, addressing them in English. The party were thereafter conducted through the castle and the private gardens, into which latter the public are not allowed to enter. By invitation of the Empress, a collation was spread in an adjoining garden.

After this visit they were taken to the wine cellars of Messrs. Deinhard & Co., and investigated the product, as it appealed to more than one of the senses. Here, again, was call for additional oratorical effort.

Driving thence to the Rhine, a special chartered steamer, decorated with flags, carried the party down the stream to Koenigswinter. Thence, by rack road, they were conveyed to the Drachenfels, where, again, a banquet was served, with more speeches. Returning to the steamer, the party sailed down the Rhine to Cologne, reaching that city at one o'clock. On the way salutes were interchanged between the steamer and industrial houses on the banks of the river, and, in many cases, illuminations and fireworks marked the residences of the interested hosts.

At Cologne, the walls of the city and the boat-bridge were illuminated, thousands of people being attracted to visit the triumphal march of the Engineers from the boat to the station. The party scattered at the close of this day's entertainment.

There had been a most cordial invitation given to the party, by the Midland Railway of England, to visit the shops of that company at Derby before they left for the continent. The pressure of other invitations, however, made it impossible to accept this courtesy previous to the 20th of June, and so it was arranged that, on the return from London to Liverpool, those of the party sailing July 24th should stop at the Midland Shops, on their way northward.

There were about twenty-five who assembled at the St. Pancras Station on the morning of Monday, July 22d. On their arrival at Derby a luncheon awaited the party, and, after luncheon, with its accompaniment of speeches, they were taken through the shops under the guidance of Mr. John Noble, the Chairman, and certain Directors.

VI.—The Return and Conclusions.

The party returned in small detachments, at their individual convenience, during the months of July and August. A very few

of them were fortunate enough to remain for further travel during the month of September. The great majority of those who were able to, chose their passage homeward by the faster ships of the Inman Line, to enjoy the experience of being driven through the water at the speed of a freight train, and to study the working of a twin-screw vessel. The recommendation of an interested member of the party was carried out, by which the engrossed resolutions and illuminated addresses were photographed in London, and copies of these photographs have been given to the four engineering Societies participating in the trip. On the 20th of July, in London, a most enjoyable little re-union was held in the form of a small dinner, the particular occasion of the assembly being the presentation to Mr. James Forrest, Secretary of the Institution of Civil Engineers of Great Britain, of a handsomely-chased and inscribed loving-cup, a presentation from the American Engineers, and expressive of their recognition of all that he had done for them and their ladies during the stay in London. The inscription on that cup was as follows:

PRESENTED TO
JAMES FORREST, ESQ.,
OF
THE INSTITUTION OF
CIVIL ENGINEERS

By the Joint Party
of American Engineers
Visiting Europe
1889

in heartfelt remembrance
of his
efforts and success
in bringing about the visit of that party to England
and in grateful memory of those delightful days
between June 5th. and 20th 1889
so filled with associations
of enjoyment and of pleasurable companionship
with brother Engineers
in
the old country.

At the same time a goblet of massive silver was presented to Mr. James Dredge, of London, by the same group, in recognition of all that his tact and energy had done for the party, in arranging in advance for the reception which the party had enjoyed. It would, perhaps, be impossible to give, even to the tourists, any adequate idea of how much had devolved upon Mr. Dredge, and how much had been done before the details of the excursion passed into Mr. Forrest's hands. It was thoroughly appreciated by the officers conversant with the matter, and it was felt by the Executive Committee that only in some such way as this could they convey to these gentlemen their appreciation of the thought and care which had been necessary to make so great an undertaking so great a success. The inscription on Mr Dredge's goblet was as follows:

PRESENTED
TO
JAMES DREDGE, ESQ.,
BY THE JOINT PARTY OF
AMERICAN ENGINEERS
VISITING EUROPE.
1889.

In recognition
of
his labour and thought
in planning and arranging the details of
their visit to England and Paris
which has been so signally successful
and which will be not only a
pleasant memory of professional profit
but also of
warm personal affection
and
International fellowship.

There was a large number of photographers among the party, who have brought home with them many interesting souvenirs of their trip. In addition to these unofficial reproductions, several of the hosts, having the groups photographed for themselves, have thus also preserved most enjoyable mementoes for

their visiting guests. There has also been compiled in the rooms of the society a scrap-book which embodies as many as possible of the documents, programmes, invitations, etc, which were accumulated during the various visits. Mention should also be made of the exacting labors entailed upon Mr. Chas. Kirchhoff, Jr., and Mr. Geo. M. Bond, members of the society, who acted in succession as secretaries of the Executive Committee and of the party. The demand on their time, tact, and good-nature was very heavy, and sometimes the burden of clerical labor precluded their participation in excursion or entertainment. There was work enough to have made it worth while for the party to have brought with it a clerk under salary, to do what these gentlemen had to do without other recognition than appreciative regard from those who understood what their sacrifices were.

The Council of the American Society of Mechanical Engineers feel that upon them will rest the burden (which they will most delightedly undertake to carry) of attempting in some manner to return the courtesies which have been received, should a similar body of trans-Atlantic engineers ever arrange to pay a similar visit to this country. It is also with the desire to let it be more generally understood what is the extent of this obligation upon American engineers, should this contingency come to fruition, that this appendix has been penned.

VII.—Addresses and Resolutions.

The Executive Committee chosen at Liverpool was as follows:

JOINT EXECUTIVE COMMITTEE

OF

MEMBERS OF THE AMERICAN ENGINEERING SOCIETIES.

EUROPEAN TOUR, 1889.

Honorary Chairman.

D. J. Whittemore, Past President A. S. C. E.

Chairman.

Henry R. Towne, President A. S. M. E., Mem. A. S. C. E, Mem. I. M. E.

O. Chanute, Past President A. S. C. E.
C. J. H. Woodbury, Vice-President A. S. M. E., Mem. A. S. C. E.
Thomas C. Clarke, Mem. A. S. C. E.

PROF. F. R. HUTTON, Secretary A. S. M. E., Mem. A. I. M. E.
WILLIAM H. WILEY, Treasurer A. S. M. E., Mem. A. S. C. E., Mem. A. I. M. E.
A. DEMPSTER, Mem. A. S. C. E.
WILLIAM KENT, Vice-President A. S. M. E., Mem. A. I. M. E.
JAMES ARCHIBALD, Mem. A. S. C. E.
S. W. BALDWIN, Manager A. S. M. E.
CLARK FISHER, Mem. A. S. C. E.
J. T. HAWKINS, Manager A. S. M. E.
DR. HERBERT G. TORREY, Mem. A. I. M. E.
GEORGE M. BOND, Manager A. S. M. E., Mem. A. S. C. E.
WILLIAM FORSYTH, Manager A. S. M. E., Mem. A. I. M. E.
OBERLIN SMITH, Mem. A. S. C. E., Mem. A. S. M. E., Mem. A. I. M. E.
E. V. D'INVILLIERS, Mem. A. I. M. E.

Treasurer.

ALFRED E. HUNT, Vice-President A. I. M. E., Mem. A. S. C. E., Mem. I. & S. Inst.

Honorary Secretary.

C. E EMERY, Mem. A. S. C. E., Mem. A. S. M. E., Mem. A. I. M. E.

Secretary.

CHARLES KIRCHHOFF, JR., Manager A. I. M. E., Mem. A. S. M. E.

NOTE.—Abbreviations: A. S. C. E. represent the American Society of Civil Engineers; A. S. M. E., American Society of Mechanical Engineers; A. I. M. E., American Institute of Mining Engineers.

At the London re-union in the theatre of the Institution of Civil Engineers the address presented to the visitors, engrossed and illuminated, was as follows:

TO THE PRESIDENTS OF THE AMERICAN SOCIETIES OF CIVIL, MINING, MECHANICAL, AND ELECTRICAL ENGINEERS:

We, the President, Past Presidents, Vice-Presidents, Council, and Members of The Institution of Civil Engineers, acting on this occasion both for ourselves and the various bodies of engineers of the United Kingdom, hereby tender to you as representatives of the members of the several engineering societies of America, a sincere and cordial welcome to this country, and gladly avail ourselves of the opportunities to publicly acknowledge, and as far as possible reciprocate, the manifold courtesies which for many years past have been lavished on British engineers visiting the great Republic.

It is a source of peculiar satisfaction to receive you w
we are here in the home of the parent of all the duly ns
societies of this kingdom. The association of all the
England into one body for their common advantage ori you v
of the fathers of the profession: it was not, howe
after his death, viz., in 1817,—well-nigh three-q rs
the present institution was actually formed.

Telford became its president in 1820, and
under which it has ever since flourished.

to state that our institution now comprises (including the class of students) upwards of 5,700 members, and is largely adding to its membership every year.

Although the civil engineers act as hosts in your reception, the several engineering bodies of the country are associated with us, and others outside the profession join in the welcome, and have rendered valuable aid in the endeavors to secure your comfort and gratification. Foremost of all must be mentioned the permission given by Her Most Gracious Majesty, the Queen, for you to inspect her royal palaces and domains at Windsor and in the metropolis. Nor must we omit to place on record the very exceptional and profound fact that the Lord Mayor, Aldermen, and Common Council of the city of London have been pleased to place at the disposal of the reception committee the use of the ancient and noble Guildhall, in order that we may entertain you, in accordance with old English custom, at a festival dinner therein.

The leading railway, gas, and water companies have vied with each other in exercising hospitality; nor have private individuals been lacking in the earnest desire to add to your gratification whilst in our midst.

It would be superfluous and presumptuous to enlarge on the professional merits of American engineers. Their great works and clever inventions have passed far beyond the sphere of mere technical appreciation, and have become of world-wide celebrity. We feel justified in regarding the influence of you and your predecessors as one of the principal factors which have raised, with unexampled rapidity, the modest republic of George Washington to one of the foremost nations of the earth. The problem of dealing with great difficulties presented by Nature, and until recently with comparatively limited means and limited appliances, has been solved by American engineers, and the solution has left its mark upon the character of the nation.

With a population about double our own, and a territory stretching between ocean and ocean, more than three thousand miles from east to west, not speaking of its extent from north to south, distances have been conquered by your vast system of railways on a scale, the magnitude of which we have no experience.

We trust that all the arrangements made for your visits to some of the most important public works in this kingdom will be successful, and acceptable, and hope you may carry back pleasant recollections of your visit to this country.

Witness our hands and seal, this 13th day of June, 1889.

JOHN COODE,
President.
JAS. FORREST,
Secretary.

At the official re-union of the party at the close of the London stay, the following series of resolutions were presented and passed. The addresses to the Institution of Civil Engineers and to the Queen were engrossed and illuminated handsomely; the rest were engrossed, but not illuminated:

TO THE PRESIDENT, COUNCIL, AND OTHER MEMBERS OF THE INSTITUTION OF CIVIL ENGINEERS:

The joint party of American Engineers visiting Europe, comprising Members of the American Society of Civil Engineers, the American Society of Mechanical Engineers, the American Institute of Mining Engineers, and the American

Institute of Electrical Engineers to their hosts in London: To the President, Council, and other Members of the Institution of Civil Engineers:

A GREETING.

The members of the visiting party, almost overwhelmed by the cordiality of the reception accorded to them by their brother Engineers of the United Kingdom, deeply cognizant of the personal obligation under which the hospitalities, so widely and so cordially extended, have placed them, appreciating most warmly the welcome which those hospitalities implied, and realizing, above all, the sentiments of international friendship and good-will on which they rest, tender this greeting in return, as a slight token of their appreciation and esteem.

They recognize especially the promptness with which all arrangements for their reception were conceived; the thoroughness with which all plans were matured, and the efficiency with which every detail was carried out. The foresight and care thus exercised contributed greatly to their enjoyment of the various festivities and excursions, deepened the obligations of the visitors to their hosts, and will ever command their admiration as exemplifying to an unusual degree their ability to organize and to execute.

Foremost among the many acts of welcome for which they desire to express their thanks, must be mentioned the special permission given by

Her Most Gracious Majesty, the Queen,

for the inspection of her royal palaces and domains at Windsor, and in the metropolis, an act consistent with a long series of others from the same source, indicative of that cordiality and good-will between the two branches of the Anglo-Saxon race, which it is equally the interest and the desire of both to see maintained and made secure.

They desire, also, thus to record their sense of obligation to the Lord Mayor and Common Council for the high compliment implied in their sanction of the use of the Guildhall, for the dinner given to the visitors by the Institution of Civil Engineers, the 13th of June, 1889.

To their hosts on that occasion, the President, Council, and other Members of the Institution of Civil Engineers, they desire to express their most cordial and hearty thanks for the magnificent hospitality extended to them on a scale and amidst surroundings without precedent in the long record of fraternal gatherings of Engineers, and constituting an event which will not only be remembered by those who had the privilege and honor of participating in it, but which will also be ever memorable in the annals of the Society whose members were the guests of the occasion.

They beg also to convey, through the Institution of Civil Engineers, their hearty thanks to the Trustees of Public Works, and the officers of numerous corporations and firms whose works were opened to the visitors for their inspection, and the courtesies and attentions received from those whose hospitality it was to accept.

Finally, the joint party of American Engineers visiting Europe, individually and as members of the several organizations to which they belong, unite with more cordiality than they can find words to fittingly express in the wish that the Members of the Institution of Civil Engineers, and of the engineering fraternity of the United Kingdom should reciprocate the present visit, by coming to America either collectively or individually, assuring all who may so come of a warm welcome, and of every facility for visiting such places of engineering or other interests

as they may desire to visit, and recording here the hope that this suggestion may be generally and speedily accepted.

On behalf of the Joint American Societies:

D. J. WHITTEMORE, *Past President.*
C. E. EMERY, *Chairman Committee Am. Soc. Civil Engineers.*
HENRY R. TOWNE, *President.*
F. R. HUTTON, *Secretary Am. Soc. Mechanical Engineers.*

ALFRED E. HUNT, *Vice-President.*
C. KIRCHHOFF, JR., *Am. Inst. Mining Engineers.*
ELIHU THOMSON, *President.*
JESSE M. SMITH, *Am. Inst. Electrical Engineers.*

LONDON, *June*, 1889.

ADDRESS TO HER BRITTANIC MAJESTY.

TO VICTORIA.

BY THE GRACE OF GOD, OF THE UNITED KINGDOM OF GREAT BRITAIN AND IRELAND, QUEEN, DEFENDER OF THE FAITH, EMPRESS OF INDIA:

MAY IT PLEASE YOUR GRACIOUS MAJESTY:

We, the Members of the American Societies of Civil, Mechanical, and Mining Engineers, now visiting England with our wives and daughters, the guests, while in London, of the Institution of Civil Engineers, deeply grateful to Your Majesty for the unusual privileges so graciously extended to us by your royal command, whereby we have been permitted to view the royal domains in Windsor, and the royal palaces in London, hereby unite in this brief record of our grateful thanks.

We shall ever remember this act of royal and international hospitality which we are not vain enough to appropriate to ourselves, but in which we recognize another of the many expressions of kindness and good-will which your Majesty has ever been pleased to extend to that younger and larger branch of the English-speaking race whose home is on the other side of the Atlantic.

Praying for a long continuance of that reign which is the brightest and the greatest in the annals of the Anglo-Saxon race, and that your Majesty may have many more years of health, prosperity, and peace,

We are now and ever Your Majesty's most grateful well-wishers, whose signatures are hereunder subscribed at London, this 18th day of June, A.D., 1889, on behalf of the Members of the several Associations which we respectfully represent:

D. J. WHITTEMORE. *Past President Am. Soc. Civil Engineers.*
HENRY R. TOWNE, *President Am. Soc. Mechanical Engineers.*
ALFRED E. HUNT, *Vice-President Am. Inst. Mining Engineers.*

TO THE LIVERPOOL RECEPTION COMMITTEE:

ALFRED WOLF, ESQ., *Memb. Inst. Civil Engineers, Chairman of the Executive Committee.*
GEO. HETON DAGLISH, ESQ., *M. E. Inst. C. E., Hon. Treasurer.*
HENRY M. WEST, ESQ., *M. Inst. C. E., Hon. Secretary.*

The joint party of American Engineers visiting Europe, comprising Members of the American Society of Civil Engineers, the American Society of Mechanical Engineers, and the American Institute of Mining Engineers, beg to convey hereby to the Liverpool Reception Committee their most cordial thanks for the hospitalities extended to the visiting party during their stay in Liverpool, June 4 to 7, 1889; they desire further to express their high appreciation of the care and

completeness with which the arrangements for their reception were conceived and carried out, and also of the magnificent works of engineering and public interest which it was their privilege to visit under such exceptional and favorable auspices; they desire also to express the hope that it may be their privilege at some future time to extend similar courtesies in America, to the Engineers of Liverpool, and, finally, they beg to convey, through the Reception Committee, their warmest thanks to His Worship the Mayor of Liverpool, E. H. Cookson, Esq.; to the Liverpool Clubs, Conservative, Reform, Exchange, and Palatine, for the privilege of Honorary Membership; to the various Corporations and Firms whose works were open to the inspection of the visiting party, and to the general subscribers to the Reception Fund.

On behalf of the Joint American Engineering Societies:

D. J. WHITTEMORE, *Past Pres. Am. Soc. Civil Engineers.*
HENRY R. TOWNE, *Pres. Am. Soc. Mech. Engineers.*
ALFRED E. HUNT, *Vice-Pres. Am. Inst. Mining Engineers.*

LONDON, *June*, 1889.

TO THE DIRECTORS AND OFFICERS OF THE MERSEY DOCKS AND HARBOR BOARD, LIVERPOOL:

The joint party of American Engineers visiting Europe, comprising Members of the American Society of Civil Engineers, the American Society of Mechanical Engineers, and the American Institute of Mining Engineers, beg to convey hereby to the Directors and Officers of the Mersey Docks and Harbor Board their hearty thanks for the hospitality extended to the visiting party on the 6th of June, 1889, and to record their admiration of the gigantic Engineering Works constructed and operated under the management of the Mersey Dock and Harbor Board, Docks exceeding in magnitude any similar works in Europe, and without parallel of any kind in America.

The visitors beg also to tender their best thanks for the arrangements so well organized and so efficiently carried out, whereby their large party was conducted over the works under such pleasant auspices, and with such little fatigue.

On behalf of the Joint American Societies:

D. J. WHITTEMORE, *Past Pres. Am. Soc. Civil Engineers.*
HENRY R. TOWNE, *Pres. Am. Soc. Mech. Engineers.*
ALFRED E. HUNT, *Vice-Pres. Am. Inst. Mining Engineers.*

LONDON, *June*, 1889.

TO THE DIRECTORS AND OFFICERS OF THE MERSEY RAILWAY COMPANY:

The joint party of American Engineers visiting Europe, comprising Members of the American Society of Civil Engineers, the American Society of Mechanical Engineers, and the American Institute of Mining Engineers, beg to convey hereby to the Directors and Officers of the Mersey Railway Company their hearty thanks for the courtesy extended to them on June 6, 1889, on the occasion of the visit of the joint party to the Mersey Tunnel Railway and its connected plant.

They desire also to record their high appreciation of the professional skill and ability shown in the design and execution of the great Tunnel and its Railway, as well as in the plant designed for the drainage, ventilation, and operation of the Tunnel.

On behalf of the Joint American Societies:

D. J. WHITTEMORE, *Past Pres. Am. Soc. Civil Engineers.*
HENRY R. TOWNE, *Pres. Am. Soc. Mech. Engineers.*
ALFRED E. HUNT, *Vice-Pres. Am. Inst. Mining Engineers.*

LONDON, *June*, 1889.

TO MESSRS. LAIRD BROS., BIRKENHEAD:

The joint party of American Engineers visiting Europe, comprising Members of the American Society of Civil Engineers, the American Society of Mechanical Engineers, and the American Institute of Mining Engineers, beg to convey hereby their most hearty thanks to Messrs. Laird Bros. for the privilege of visiting and inspecting their most interesting works at Birkenhead, the fame of which is international, and for the opportunity of thus seeing the process of construction whereby is produced those modern wonders, the Transatlantic Liners, whose achievements have reduced the passage of the Atlantic to the compass of a week or less.

To Mr. and Mrs. William Laird, the ladies and gentlemen of the joint party present their compliments and respects, and beg to express their warm appreciation of the hospitality extended during their visit to Birkenhead, which will remain as one of the pleasantest associations connected with their trip to England.

On behalf of the Joint American Societies:

D. J. WHITTEMORE, *Past Pres. Am. Soc. Civil Engineers.*
HENRY R. TOWNE, *Pres. Am. Soc. Mech Engineers.*
ALFRED E. HUNT, *Vice-Pres. Am. Inst. Mining Engineers.*

LONDON, *June*, 1889.

TO THE MANCHESTER RECEPTION COMMITTEE:

WILLIAM RADFORD, ESQ., *Chairman.*
THOMAS ASHBURY, ESQ., *Hon. Secretary.*

The joint party of American Engineers visiting Europe, comprising Members of the American Society of Civil Engineers, the American Society of Mechanical Engineers, and the American Institute of Mining Engineers, beg to convey hereby to the Manchester Reception Committee their cordial thanks for the hospitality extended to the joint party during its visit to Manchester, June 7, 1889.

To His Worship, the Mayor of Manchester, the visitors tender the assurance of their high consideration and esteem, and beg also to express their recognition of the hospitality extended upon the occasion of the banquet, over which His Worship so ably presided.

To William Radford, Esq., Chairman, and Thomas Ashbury, Esq., Hon. Secretary, and to the other members of the Reception Committee, the visitors tender their warmest thanks for the arrangements so admirably planned and so efficiently carried out to render their visit to Manchester interesting and profitable.

To the various corporations and firms whose establishments in Manchester were so hospitably opened to their inspection, the visitors also tender their warmest thanks, coupled with the hope that it may be their privilege, in the near future, to extend similar courtesies in America to the Engineers of Manchester.

On behalf of the Joint American Societies:

D. J. WHITTEMORE, *Past Pres. Am. Soc. of Civil Engineers.*
HENRY R. TOWNE, *Prest of the Am. Soc. of Mech. Engineers.*
ALFRED E. HUNT, *Vice-Pres. Am. Inst. of Mining Engineers.*

LONDON, *June*, 1889.

To the Directors and Officers of the London and Northwestern Railway Company:

Sir Richard Moon, Bart., *Chairman.*
I. P. Bickersteth, Esq., *Deputy Chairman.*
G. Finlay, Esq., *General Manager.*
F. W. Webb, Esq., *Mechanical Engineer.*
E. Michel, Esq., *Continental Traffic Superintendent.*

The joint party of American Engineers visiting Europe, comprising Members of the American Society of Civil Engineers, the American Society of Mechanical Engineers, and the American Institute of Mining Engineers, beg to convey hereby to the Directors and Officers of the Northwestern Railway Company their hearty thanks for the hospitality extended and courtesies shown to the joint party during their stay in Liverpool, June 4 to 7, 1889, during their visit to the Works at Crewe, and during the several tours made by the members of the party, under the auspices of the Company.

The members of the joint party desire especially to express their appreciation of the promptness with which all the arrangements were conceived and organized by the officers of the Company, whereby full information concerning them was communicated to the members of the visiting party prior to sailing from New York, thus enabling them to consider the various plans during the voyage. They desire to convey hereby their best thanks to James Shaw, Esq., of Lime Street Station, and to Frederic W. Thompson, Esq., the Company's American Agent, and his able assistant, Mr. LeTouzel, through whose efficient aid every member of the party was enabled to obtain full information, and to make arrangements for the tour selected.

The thanks of the joint party are also conveyed to the Directors of the Company for the courtesy extended of complimentary transportation between Liverpool and London, and return, and likewise for the privilege of visiting the Works at Crewe, and for the luncheon so hospitably provided there for the visiting party.

To F. W. Webb, Esq., Mechanical Engineer to the Company, and Manager of the great Works at Crewe, the visitors beg to tender their warmest thanks for his hospitality, and to record their high appreciation of his talents and achievements as an Engineer, and their admiration of the great works with which his name has been so identified, the fame of which extends throughout the world.

In presenting these resolutions to the Directors of the Company, the visitors beg that the sentiments herein expressed may be suitably conveyed to all the officers and subordinates to whom they are indebted for coöperation in the planning and carrying out of the various excursions, and for other courtesies and attentions.

On behalf of the Joint American Societies:

D. J. Whittemore, *Past Pres. Am. Soc. Civil Engineers.*
Henry R. Towne, *Pres. Am. Soc. Mech. Engineers.*
Alfred E. Hunt, *Vice-Pres. Am. Inst. Mining Engineers.*

London, *June*, 1889.

To Mr. F. W. Webb, Mechanical Engineer of the London and Northwestern Railway, Crewe, England:

The joint party of Mechanical Engineers in Europe, comprising Members of the American Society of Civil Engineers, the American Society of Mechanical Engineers, and the American Institute of Mining Engineers, beg leave to sup-

plement the expression of their thanks to the London and Northwestern Railway Company, by a personal assurance to yourself of their appreciation of your own efforts to make their visit to England a pleasant, profitable, and memorable one.

They would convey to you in this way their warm recognition of those friendly thoughts and personal efforts which have preceded the results which they have so much enjoyed, and ask that you will accept their thanks for your own share in bringing these careful plans into such successful fruition.

D. J. WHITTEMORE, *Past Pres. Am. Soc. Civil Engineers.*
HENRY R. TOWNE, *Pres. Am. Soc. Mech. Engineers.*
ALFRED E. HUNT, *Vice-Pres. Am. Inst. Mining Engineers.*

LONDON, *June*, 1889.

TO THE CHAIRMAN, DIRECTORS, AND OFFICERS OF THE MIDLAND RAILWAY COMPANY:

The joint party of American Engineers visiting Europe, comprising Members of the American Society of Civil Engineers, the American Society of Mechanical Engineers, and the American Institute of Mining Engineers, beg to convey hereby to the Chairman, Directors, and Officers of the Midland Railway Company their hearty thanks for the invitation to visit the Works of the Company at Derby, on their way from Liverpool to London, the acceptance of which was unfortunately prevented by other engagements of the visiting party.

They beg also to express their thanks for the privilege extended to them of visiting and inspecting the Goods Warehouses of the Company, at St. Pancras, and at Whitcross Street, in London, on Wednesday, June 19, 1889.

The members of the visiting party are especially grateful for the renewed hospitality tendered to them by the Directors and Officers, in the offer of a special complimentary train from London to Liverpool, with provision for visiting the Workshops of the Company, at Derby, after their return to Paris. The cordiality thus shown is consistent with the numberless acts of hospitality extended to the visitors during their stay in London, and is accepted as another proof indicative of the good-will and friendship between the two nations.

On behalf of the Joint American Party:

D. J. WHITTEMORE, *Past Pres. Am. Soc. Civil Engineers.*
HENRY R. TOWNE, *Pres. Am. Soc. Mechanical Engineers.*
ALFRED E. HUNT, *Vice-Pres. Am. Inst. Mining Engineers.*

LONDON, *June*, 1889.

TO THE DIRECTORS AND OFFICERS OF THE LANCASHIRE AND YORKSHIRE RAILWAY:

J. A. F. ASPINALL, ESQ., *Chief Mechanical Engineer.*
J. H. STAFFORD, ESQ., *Secretary.*

The joint party of American Engineers visiting Europe, comprising Members of the American Society of Civil Engineers, the American Society of Mechanical Engineers, and the American Institute of Mining Engineers, beg to convey hereby to the Directors and Officers of the Lancashire and Yorkshire Railway Company their hearty thanks for the hospitality extended on Friday, June 7, 1889, when the party of American Engineers visited the Horwich Workshops of the Company; for the special and elegant excursion train which carried them from Liverpool, and for the handsome collation which closed the visit, and for the privilege of inspecting the Company's plant.

To J. A. F. Aspinall, Esq., Chief Mechanical Engineer of the Company, the visitors extend their special thanks for his untiring efforts in arranging for the excursion, and in making the inspection of the Works interesting and instructive. They desire also to record their high appreciation of the talent and skill so abundantly shown by Mr. Aspinall in the construction and equipment of the plant at Horwich; in the numberless devices and appliances introduced by him for the improvement in quality or for reduction in cost of product, and in the high quality manifest in every detail of the work produced.

To J. H. Stafford, Esq., Secretary to the Company, the visitors also tender their most cordial thanks for his many attentions during the visit, and for his efficient aid in rendering it interesting.

The visitors beg also to request that the sentiments herein conveyed may be duly communicated to all the other Officers and subordinates to whom they may be indebted for courtesies and attentions.

On behalf of the Joint American Societies:

D. J. WHITTEMORE, *Past Pres. Am. Soc. Civil Engineers.*
HENRY R. TOWNE, *Pres. Am. Soc. Mech. Engineers.*
ALFRED E. HUNT, *Vice-Pres. Am. Inst. Mining Engineers.*

LONDON, *June*, 1889.

To S. B. BOULTON, ESQ., ASSOC. INST. C. E., COPPED HALL, TOTTERIDGE, HERTS:

The joint party of American Engineers visiting Europe, comprising Members of the American Society of Civil Engineers, the American Society of Mechanical Engineers, and the American Institute of Mining Engineers, beg to convey hereby to S. B. Boulton, Esq., their warmest thanks for the hospitality tendered to them in his most courteous invitation to witness the performance as a pastoral play of "A Midsummer Night's Dream" by the dramatic company of the Shakespeare Reading Society, in the grounds of Copped Hall, on Saturday, June 15, 1889. The members of the visiting party whose privilege it was to avail themselves of the invitation thus extended will ever recall the occasion with most delightful recollections, and the other members of the party regret that hospitality in other directions deprived them of the privilege of assisting at a performance so notable and unique.

On behalf of the Joint American Societies:

D. J. WHITTEMORE, *Past Pres. Am. Soc. Civil Engineers.*
HENRY R. TOWNE, *Pres. Am. Soc. Mech. Engineers.*
ALFRED E. HUNT, *Vice-Pres. Am. Inst. Mining Engineers.*

LONDON, *June*, 1889.

TO THE LORD BRASSEY, K.C.B., ASSOC. INST. C. E.:

The joint party of American Engineers visiting Europe, comprising Members of the American Society of Civil Engineers, the American Society of Mechanical Engineers, and the American Institute of Mining Engineers, beg to convey to Lord Brassey their warmest thanks for the hospitality extended to the members of the visiting party, at his residence, on Saturday, June 15, 1889.

The name borne by His Lordship is one identified on both sides of the Atlantic with some of the earliest and greatest railway constructions in the world, rendered honorable in his own person by important public services, and in later years associated with the record of many yachting voyages, the interest and pleasure of which was made available to thousands of readers throughout the

world by one whose name was thus rendered familiar, and whose character became respected and admired by all the readers of her works.

On behalf of the Joint American Societies :

HENRY R. TOWNE, *Pres. Am. Soc. Mech. Engineers.*
D. J. WHITTEMORE, *Past Pres. Am. Soc. Civil Engineers.*
ALFRED E. HUNT, *Vice-Pres. Am. Inst. Mining Engineers.*

LONDON, *June*, 1889.

TO THE BARONESS BURDETT-COUTTS :

The joint party of American Engineers visiting Europe, comprising Members of the American Society of Civil Engineers, the American Society of Mechanical Engineers, and the American Institute of Mining Engineers, beg to convey hereby their most cordial thanks to the Baroness Burdett-Coutts for the hospitality extended to the members of the visiting party, at her residence, Holly Lodge, Highgate, on Monday, June 17, 1889, and to record their appreciation of the privilege thus extended to participate under such exceptional auspices in a social entertainment which they fully recognize as indicative of cordiality and good-will, not only to those who had the honor of assisting therein, but also to the nation which they represent.

On behalf of the Joint American Societies :

D. J. WHITTEMORE, *Past Pres. Am. Soc. Civil Engineers.*
HENRY R. TOWNE, *Pres. Am. Soc. Mech. Engineers.*
ALFRED E. HUNT, *Vice-Pres. Am. Inst. Mining Engineers.*

LONDON, *June*, 1889.

TO HIS GRACE THE ARCHBISHOP OF CANTERBURY :

The American Engineers now visiting Europe, comprising Members of the American Institute of Civil Engineers, the American Society of Mechanical Engineers, and the American Institute of Mining Engineers, beg hereby to convey their sincere and grateful thanks to His Grace the Archbishop of Canterbury for his great kindness in opening Lambeth Palace for their inspection, and especially for the personal attention so courteously shown them by His Grace in conducting them over the Chapel, and in performing the beautiful service of prayer therein.

On behalf of the Joint American Societies :

HENRY R. TOWNE, *Pres. Am. Soc. Mech. Engineers.*
D. J. WHITTEMORE, *Past Pres. Am. Soc. Civil Engineers.*
ALFRED E. HUNT, *Vice-Pres. Am. Inst. Mining Engineers.*

LONDON, *June*, 1889.

TO THE VERY REV. G. G. BRADLEY, D.D., DEAN OF WESTMINSTER:

The American Engineers visiting Europe, comprising Members of the American Society of Civil Engineers, the American Society of Mechanical Engineers, and the American Institute of Mining Engineers, desire hereby to convey their cordial thanks to the Very Rev. the Dean of Westminster for his thoughtful kindness in preparing for them the beautiful address which he delivered on the occasion of their visit to Westminster Abbey, June 13, 1889.

Furthermore, they wish to express their high appreciation of the truly catholic spirit which thus holds out the hand of the Church to the great profession of

engineering, and bids it God-speed on its mission of promoting the civilization of the world.

On behalf of the Joint American Societies :

HENRY R. TOWNE, *Pres. Am. Soc. Mech. Engineers.*
D. J. WHITTEMORE, *Past Pres. Am. Soc. Civil Engineers.*
ALFRED E. HUNT, *Vice-Pres. Am. Inst. Mining Engineers.*

LONDON, *June*, 1889.

TO THE PRESIDENT, COMMITTEE, AND MEMBERS OF THE WHITEHALL CLUB, WESTMINSTER :

The joint party of American Engineers visiting Europe, comprising Members of the American Society of Civil Engineers, the American Society of Mechanical Engineers, and the American Institute of Mining Engineers, beg to convey hereby to the President, Committee, and Members of the Whitehall Club their most hearty thanks for the privilege of Honorary Membership extended to the members of the visiting party during their stay in London, June, 1889.

On behalf of the Joint American Societies :

HENRY R. TOWNE, *Pres. Am. Soc. Mech. Engineers.*
D. J. WHITTEMORE, *Past Pres. Am. Soc. Civil Engineers.*
ALFRED E. HUNT, *Vice-Pres. Am. Inst. Mining Engineers.*

LONDON, *June*, 1889.

TO THE CHAIRMAN, DIRECTORS, AND OFFICERS OF THE GAS-LIGHT AND COKE COMPANY, WESTMINSTER :

The joint party of American Engineers visiting Europe, comprising Members of the American Society of Civil Engineers, the American Society of Mechanical Engineers, and the American Institute of Mining Engineers, beg to convey hereby their most hearty thanks to the Chairman, Directors, and Officers of the Gas-light and Coke Company, for the privilege of visiting and inspecting their most interesting works at Beckton, June 14, 1889, representing the latest achievements in the field of Gas Engineering, and intended to maintain unimpaired the value and importance of the older illuminating agent, Gas, in competition with its latest rival, Electricity.

The visitors beg also to tender their thanks for the hospitality so cordially extended in the luncheon which closed their visit to the Beckton Works, and to record their appreciation of the attention and courtesies shown to them during their visit, by officers and employés of the corporation.

On behalf of the Joint American Societies :

D. J. WHITTEMORE, *Past Pres. Am. Soc. Civil Engineers.*
HENRY R. TOWNE, *Pres. Am. Soc. Mech. Engineers.*
ALFRED E. HUNT, *Vice-Pres. Am. Inst. Mining Engineers.*

LONDON, *June*, 1889.

TO THE CHAIRMAN, DIRECTORS, AND OFFICERS OF THE GREAT WESTERN RAILWAY COMPANY :

The joint party of American Engineers visiting Europe, comprising Members of the American Society of Civil Engineers, the American Society of Mechanical Engineers, and the American Institute of Mining Engineers, beg to convey hereby their most hearty thanks to the Chairman, Directors, and Officers of the Great Western Railway Company for the hospitality extended to them in the form of a

special complimentary train for the conveyance of the visiting party from London to Windsor and return, on the occasion of their visit to the latter place, June 15, 1889.

On behalf of the Joint American Societies:

HENRY R. TOWNE, *Pres. Am. Soc. of Mech. Engineers.*
D. J. WHITTEMORE, *Past Pres. Am. Soc. Civil Engineers.*
ALFRED E. HUNT, *Vice-Pres. Am. Inst. Mining Engineers.*

LONDON, *June*, 1889.

TO THE CHAIRMAN, DIRECTORS, AND OFFICERS OF THE LONDON AND SOUTHWESTERN RAILWAY COMPANY:

The joint party of American Engineers visiting Europe, comprising Members of the American Society of Civil Engineers, the American Society of Mechanical Engineers, and the American Institute of Mining Engineers, beg to convey hereby to the Chairman, Officers, and Directors of the London and Southwestern Railway Company their most hearty thanks for the hospitality tendered to the members of the visiting party in the form of special complimentary trains from London to Hampton Court and to Wimbledon, on Tuesday, June 18, 1889.

On behalf of the Joint American Societies:

HENRY R. TOWNE, *Pres. Am. Soc. Mech. Engineers.*
D. J. WHITTEMORE, *Past Pres. Am. Soc. Civil Engineers.*
ALFRED E. HUNT, *Vice-Pres. Am. Inst. Mining Engineers.*

LONDON, *June*, 1889.

TO THE CHAIRMAN, DIRECTORS, AND OFFICERS OF THE LONDON, CHATHAM, AND DOVER RAILWAY COMPANY:

The joint party of American Engineers visiting Europe, comprising Members of the American Society of Civil Engineers, the American Society of Mechanical Engineers, and the American Institute of Mining Engineers, beg to convey hereby to the Chairman, Directors, and Officers of the London, Chatham, and Dover Railway Company their most hearty thanks for the hospitality extended to them in the form of a special complimentary train and boat from London for Paris, June 20, 1889.

On behalf of the Joint American Societies:

HENRY R. TOWNE, *Pres. Am. Soc. Mech. Engineers.*
D. J. WHITTEMORE, *Past Pres. Am. Soc. Civil Engineers.*
ALFRED E. HUNT, *Vice-Pres. Am. Inst. Mining Engineers.*

LONDON, *June*, 1889.

TO MR. WILLIAM FORBES, CONTINENTAL TRAFFIC MANAGER, LONDON, CHATHAM, AND DOVER RAILWAY:

The joint party of American Engineers in Europe, comprising Members of the American Society of Mechanical Engineers, the American Society of Civil Engineers, and the American Institute of Mining Engineers, desire to convey to you their sincere recognition of the efforts which you have put forth on their behalf and for their pleasure on the occasion of their trip, as a body, from London to Paris.

They appreciate how much of personal effort and endeavor has been expended by yourself to secure for them the exceptional courtesies which were enjoyed on

this occasion, and beg that you will accept this expression of their thanks as an attempt to acknowledge their personal indebtedness to you.

HENRY R. TOWNE, *Pres. Am. Soc. Mech. Engineers.*
D. J. WHITTEMORE, *Past Pres. Am. Soc. Civil Engineers.*
ALFRED E. HUNT, *Vice-Pres. Am. Inst. Mining Engineers.*

TO THE CHAIRMAN, DIRECTORS, AND OFFICERS OF THE SOUTHEASTERN RAILWAY:

The joint party of American Engineers visiting Europe, comprising Members of the American Society of Civil Engineers, the American Society of Mechanical Engineers, and the American Institute of Mining Engineers, beg to convey hereby to the Chairman, Directors, and Officers of the Southeastern Railway Company their most hearty thanks for the hospitality tendered to the members of the visiting party in the form of a complimentary passage from Boulogne to London, available upon the occasion of their return from Paris to London, after adjournment and separation of the party in the former city, on or about July 1, 1889.

On behalf of the Joint American Societies:

HENRY R. TOWNE, *Pres. Am. Soc. Mech. Engineers.*
D. J. WHITTEMORE, *Past Pres. Am. Soc. Civil Engineers.*
ALFRED E. HUNT, *Vice-Pres. Am. Inst. Mining Engineers.*

LONDON, *June*, 1889.

TO THE PRESIDENT, DIRECTORS, AND OFFICERS OF THE CHEMIN DE FER DU NORD:

The joint party of American Engineers now visiting France, comprising Members of the American Society of Civil Engineers, the American Society of Mechanical Engineers, and the American Institute of Mining Engineers, hereby convey to the President, Directors, and Officers of the Chemin de Fer du Nord their most cordial thanks for the courtesy and hospitality shown in bringing them by a special complimentary train from Calais to Paris, on June 20, 1889, and also in the arrangements for their return to Calais.

On behalf of the Joint Societies:

HENRY R. TOWNE, *Pres. Am. Soc. Mech. Engineers.*
D. J. WHITTEMORE, *Past Pres. Am. Soc. Civil Engineers.*
ALFRED E. HUNT, *Vice-Pres. Am. Inst. Mining Engineers.*

TO MONSIEUR A. SARTIAUX, DIRECTOR GENERAL OF THE NORTHERN RAILWAY OF FRANCE, PARIS:

The joint party of American Engineers in Europe, comprising Members of the American Society of Civil Engineers, the American Society of Mechanical Engineers, and the American Institute of Mining Engineers, desire to convey to you their sincere recognition of your share in securing for them the exceptional courtesies which were enjoyed by them on the occasion of their journey, as a body, from London to Paris.

They beg to assure you that they have not failed to realize how greatly they are indebted to you personally, and they would express their appreciation of the labor and effort which you have expended on their behalf to secure a result which they consider not merely a professional, but also a national, compliment.

HENRY R. TOWNE, *Pres. Am. Soc. Mech. Engineers.*
D. J. WHITTEMORE, *Past Pres. Am. Soc. Civil Engineers.*
ALFRED E. HUNT, *Vice-Pres. Am. Inst. Mining Engineers.*

LONDON, *June*, 1889.

At the close of the Paris visit the party assembled in the rooms of the French Society, and passed the following series of resolutions:

TO THE SOCIÉTÉ DES INGÉNIEURS CIVILS DE FRANCE:

The joint party of American Engineers visiting Europe, comprising Members of the American Society of Civil Engineers, the American Society of Mechanical Engineers, and the American Institute of Mining Engineers, beg to convey to the Société des Ingénieurs Civils de France and to its Reception Committee its most hearty thanks for all the hospitable provisions which have been made for the visitors while in Paris.

Beginning with a warm welcome upon landing at Calais, the members of the Reception Committee have not relaxed their efforts to secure favorable opportunities for their guests to visit points of professional and general interest, and for all of these they beg to present their warmest recognition.

To M. Gustave Eiffel, President of the Société and projector of the 300-meter tower which is known by his name, they beg to return thanks for the visits of special privilege to that great and successful work, and to express their recognition of the kindly feeling evinced by these courtesies, which they may be allowed to consider as an attention not merely to them as Engineers alone, but as citizens of a sister Republic already under many historic obligations to the older country.

To M. Brull, Past President of the Société and President of the Reception Committee, and to M. de Dax, the Agent General of the Société, they beg to express their warm recognition of those labors which have been so signally successful in arranging the details of their visit, and which have helped to give to their tour in France an interest not merely professional, but also of international, significance.

They beg, also, to express their thanks for the social entertainments provided by the Société for the guests, for the déjeuner at the Eiffel Tower, and for the many other attentions which have been shown to individuals of the party during their stay in Paris. They would also tender their thanks to those officials in charge of works opened to them, whose courtesy has added so much to the pleasure and profit of their visits, and would ask that suitable recognition be conveyed.

And finally, they venture to express the hope that members of the Société des Ingénieurs Civils who may honor the United States with a professional visit in the future, will not fail to make themselves known to the members of the American Societies, to the end that they may have the privilege of reciprocating, so far as they can, the courtesies which have been showered upon the visitors here.

HENRY R. TOWNE, *Pres. Am. Soc. Mech. Engineers.*
D. J. WHITTEMORE, *Past Pres. Am. Soc. Civil Engineers.*
ALFRED E. HUNT, *Vice-Pres. Am. Inst. Mining Engineers.*

PARIS, *June* 26, 1889.

TO THE PRESIDENT AND MEMBERS OF THE COMITÉ DE L'EXPOSITION COLLECTIVE DE L'INDUSTRIE DU GAZ:

The joint party of American Engineers, now visiting France, comprising Members of the American Society of Civil Engineers, the American Society of Mechanical Engineers, and the American Institute of Mining Engineers, hereby

convey their thanks to the President and members of the Committee of the Collective Exposition of the Industrie du Gaz for the opportunity to visit their interesting Plant, on June 24, and for the entertainment on that occasion.

D. J. WHITTEMORE, *Past Pres. Am. Soc. Civil Engineers.*
HENRY R. TOWNE, *Pres. Am. Soc. Mech. Engineers.*
ALFRED E. HUNT, *Vice-Pres. Am. Inst. Mining Engineers.*

TO LA COMPAGNIE PARISIENNE DE L'AIR COMPRIMÉ (SYSTÊME POPP):

The joint party of American Engineers, now visiting France, comprising Members of the American Society of Civil Engineers, the American Society of Mechanical Engineers, and the American Institute of Mining Engineers, hereby convey their hearty thanks to la Compagnie Parisienne de l'Air Comprimé, and to Le Baron Deslandes, President, and M. Victor Popp, Directeur, for the privilege of visiting and inspecting the very interesting Plant of the Company, and for the entertainment so hospitably provided for their visitors.

On behalf of the Joint Societies:

D. J. WHITTEMORE, *Past Pres. Am. Soc. Civil Engineers.*
HENRY R. TOWNE, *Pres. Am. Soc. Mech. Engineers.*
ALFRED E. HUNT, *Vice-Pres. Am. Inst. Mining Engineers.*

PARIS, *June*, 1889.

TO MONSIEUR PAUL DE CAUVILLE, AINÉ, PETIT-BOURG:

The joint party of American Engineers visiting Europe, comprising Members of the American Society of Civil Engineers, the American Society of Mechanical Engineers, and the American Institute of Mining Engineers, beg to convey to Monsieur Paul De Cauville, ainé, their sincere thanks for the opportunity to visit his interesting establishment, and for the hospitable entertainment there received, on the occasion of their visit, Friday, June 28, 1889.

On behalf of the Joint Societies:

HENRY R. TOWNE, *Pres. Am. Soc. Mech. Engineers.*
D. J. WHITTEMORE, *Past. Pres. Am. Soc. Civil Engineers.*
ALFRED E. HUNT, *Vice-Pres. Am. Inst. Mining Engineers.*

PARIS, *June*, 1889.

At the close of the German visit, the following resolutions were drafted and engrossed like the others, and were sent to the respective hosts:

TO THE COAL AND IRON MASTERS OF WESTPHALIA, THE RHENISH PROVINCES, AND LUXEMBOURG:

The party of American Engineers visiting Germany, comprising Members of the American Society of Civil Engineers, the American Society of Mechanical Engineers, and American Institute of Mining Engineers, beg to convey to their hosts, the Coal and Iron Masters of Westphalia, the Rhenish Provinces, and Luxembourg, their most cordial thanks for their boundless hospitality shown, and the many courtesies extended to them during their stay in Düsseldorf.

They have greatly enjoyed and profited by the opportunites offered to visit the greatest establishments of Germany's busiest industrial section, and will ever bear in memory the delicacy which prompted the tendering of a banquet to them on their national holiday, July 4, and the delights of the trip on the wonderful Rhine, on July 5, 1889.

C. KIRCHHOFF, JR., *Secretary.*

TO THE NIEDER RHEINISCHE BEZIRKS VEREIN DEUTSCHER INGENIEURE :

The party of American Engineers visiting Germany, comprising Members of the American Society of Civil Engineers, the American Society of Mechanical Engineers, and the American Institute of Mining Engineers, beg to convey hereby to the Nieder Rheinische Bezirks Verein Deutscher Ingenieure their most cordial thanks for the hospitality shown in Düsseldorf, and particularly for the enjoyable Conversazione at the Zoological Gardens, at Düsseldorf, July 3, 1889.

C. KIRCHHOFF, JR., *Secretary.*

The following resolutions, of a personal character, were also prepared and forwarded:

TO JAMES FORREST, ESQ., SECRETARY OF THE INSTITUTION OF CIVIL ENGINEERS :

The joint party of American Engineers visiting Europe, comprising Members of the American Society of Civil Engineers, the American Society of Mechanical Engineers, and the American Institute of Mining Engineers, beg to convey hereby to James Forrest, Esq., and to his staff of able assistants, their best and most grateful thanks for their indefatigable efforts, continued through many months, and culminating in an unprecedented success, for the reception and entertainment of the American party in England by the Institution of Civil Engineers.

They appreciate that the burden and responsibility in this matter rested largely upon Mr. Forrest, and that to his foresight, energy, and executive skill are attributable in proportionate degree the completeness and perfection of the arrangements for the movements of the visitors, from the moment of their arrival in Liverpool till their departure for Paris.

The members of the joint party, acting through the officers of their respective organizations, tender to Mr. Forrest this expression of their gratitude, goodwill, and friendship, coupled with the earnest hope that they may, ere long, have the pleasure of welcoming him in America, and of expressing by deeds their sense of obligation under which he has placed them.

On behalf of the Joint American Society:

HENRY R. TOWNE, *Pres. of the Am. Soc. of Mech. Engineers.*
D. J. WHITTEMORE, *Past Pres. Am. Soc. of Civil Engineers.*
ALFRED E. HUNT, *Vice-Pres. Am. Inst. Mining Engineers.*

LONDON, *June*, 1889.

TO MR. WM. H. WILEY, TREASURER OF THE AMERICAN SOCIETY OF MECHANICAL ENGINEERS :

Such of the joint party of American Engineers now visiting Europe as are Members of the American Society of Civil Engineers, the American Society of Mechanical Engineers, the American Institute of Mining Engineers, wish hereby to express, through the officers of their respective societies represented in their Executive Committee, their cordial thanks for and their appreciation of the indefatigable efforts of Mr. Wiley in assisting to arrange for the organization, transportation, and reception abroad of their party:

Furthermore, they wish to heartily congratulate him and themselves upon the very successful issue of his efforts in their behalf, and upon the royally good time they are enjoying in Europe.

On behalf of the Joint American Party :

HENRY R. TOWNE, *Pres. Am. Soc. of Mechanical Engineers.*
D. J. WHITTEMORE, *Past Pres. Am. Soc. of Civil Engineers.*
ALFRED E. HUNT, *Vice-Pres. Am. Inst. Mining Engineers.*

LONDON, *June*, 1889.

Resolved, That we, the Members of the American Society of Civil Engineers participating in the European Trip, do hereby extend to Dr. C. E. Emery our hearty thanks for the labors incurred in arranging the matters required for our information and comfort.

D. J. WHITTEMORE.
HENRY R. TOWNE.
ALFRED E. HUNT,
and others.

LONDON, *June*, 1889.

Resolved, That the American Engineers visiting Paris very highly appreciate the services which Mr. Henry Woods has been rendering unceasingly, to promote the success of their visit; and that they recognize with their most hearty thanks the kindness with which he has devoted his time and his knowledge to their benefit.

D. J. WHITTEMORE, *Past Pres. Am. Soc. Civil Engineers.*
HENRY R. TOWNE, *Pres. Am. Soc. Mechanical Engineers.*
ALFRED E. HUNT, *Vice-Pres. Am. Inst. Mining Engineers.*

TO PROFESSOR F. R. HUTTON, SECRETARY OF THE AMERICAN SOCIETY OF MECHANICAL ENGINEERS:

The joint party of the American Engineers visiting Europe, comprising Members of the American Society of Mechanical Engineers and the American Institute of Mining Engineers, unite in this expression of cordial thanks and appreciation to Professor Hutton, for his indefatigable efforts continued through many months, for the organization of the excursion party and the perfecting of the arrangements relating thereto.

They recognize that the successful arrangements for the transportation of the party to England were chiefly due to his foresight and good management, and to his care and promptness in the conduct of correspondence with the Institution of Civil Engineers of Great Britain and others is largely due the completeness of the arrangements for the reception of the party on its arrival in England.

The members of the party desire also to convey to Professor Hutton their sympathy in the domestic anxiety which prevented his forming one of the party, and to express also their sense of personal deprivation and disappointment at his unavoidable detention, and the resulting fact that the members of the party were thus deprived during the excursion of the valuable assistance in organizing and carrying out their plans, which would otherwise have been contributed by Professor Hutton.

Finally, the members of the joint party beg that Professor Hutton will accept this testimonial as indicative of the sentiments of high respect and cordial goodwill which are felt towards him personally by every member of the joint party.

HENRY R. TOWNE, *Pres. Am. Soc. Mechanical Engineers.*
ALFRED E. HUNT, *Vice-Pres. Am. Inst. Mining Engineers.*

June, 1889.

After the return of the party to America the following letters of acknowledgment have been received, and which it has seemed worth while to print in connection with the resolutions which have called them forth:

THE INSTITUTION OF CIVIL ENGINEERS,
25 Gt. George St., Westminster, S. W.
Oct. 7, 1889.

THE PRES. OF THE AMERICAN SOCIETY OF MECHANICAL ENGINEERS,
64 Madison Ave., New York, U. S. A.

SIR:

I have now the pleasure to send copies of communications which have been received from the United States Minister in London, with enclosures, stating that Her Majesty has been graciously pleased to accept the address from the different American Engineering Societies, and that the Queen has been much gratified by the acknowledgment you have submitted to her.

I have the honor to remain, Sir,
Yours very respectfully,
JAMES FORREST, *Secretary.*

LEGATION OF THE UNITED STATES,
London, *Sept.* 24, 1889.

JAMES FORREST, ESQ., SEC'Y INSTITUTION OF CIVIL ENGINEERS,
25 Great George St., Westminster, S. W.

SIR:

Referring to your note of the 19th inst., I beg to inform you that I sent to Her Majesty the Queen, through the Foreign Office, the Illuminated Address from the American Engineers, in acknowledgment of courtesies shown them in their recent visit to this country, with a note to Lord Salisbury from myself, a copy of which I enclose.

I have to-day received an answer from his Lordship, of which I also enclose a copy herewith.

I beg to remain, Sir,
Your obedient servant,
(Signed) ROBERT T. LINCOLN.

LEGATION OF THE UNITED STATES,
London, *Sept.* 19, 1889.

MY LORD:

I have the honor to acquaint your Lordship that I have been asked by the officers of the several Societies of Civil Engineers in the United States, represented in the large party who visited England last summer, to request your good offices in submitting to Her Majesty the Queen an address expressive of their profound appreciation of the distinguished kindness and attention extended to them during their visit, and it gives me much pleasure to signify my own gratification in recalling the unusual privileges extended to them, by acceding to their request.

I have accordingly the honor to transmit herewith a box containing an Illuminated Address to Her Majesty, signed by D. J. Whittemore, Past President American Society of Civil Engineers; Alfred E. Hunt, Vice-President American Institute of Mining Engineers; Henry R. Towne, President American Society of Mechanical Engineers, of which an office copy is enclosed, and to express on their behalf the hope that the sentiments expressed in the address may be acceptable to Her Majesty.

I have the honor to be, etc.,
(Signed) ROBERT T. LINCOLN.

The Most Honorable the Marquis of Salisbury, K.G.

FOREIGN OFFICE, *Sept.* 23, 1889.

SIR:

I have the honor to acknowledge the receipt of your note of the 19th inst., in which you transmit an address from the American Society of Civil Engineers to the Queen, my sovereign, which I have had much pleasure in forwarding to its high destination.

I have the honor to be, etc.,
(For the Marquis of Salisbury)
(Signed) T. H. SANDERSON.

ROBT. T. LINCOLN, ESQ., *&c., &c., &c.*

LEGATION OF THE UNITED STATES,
London, *Oct.* 4, 1889.

SIR:

With reference to your letters of the 19th and 25th ult., I enclose herewith the copy of a note which I have received from the Foreign Office, informing me of the acceptance by Her Majesty of the address from the Societies of Civil Engineers in the United States.

I am, Sir,
Your obedient servant,
(Signed) ROBERT T. LINCOLN.

JAMES FORREST, ESQ., *Sec'y to the Institution of Civil Engineers.*

FOREIGN OFFICE, *Sept.* 30, 1889.

SIR:

With reference to my note of the 23d instant, I have the honor to inform you that the Queen has been graciously pleased to accept the address from the Societies of Civil Engineers in the United States, and that I have received Her Majesty's commands to request that you will express to the officers of the several Societies Her Majesty's sincere thanks for the same.

I have the honor to be, etc.,
(For the Marquis of Salisbury)
(Signed) T. H. SANDERSON.

ROBT. T. LINCOLN, ESQ., *&c., &c., &c.*

FROM THE ARCHBISHOP OF CANTERBURY.
LAMBETH PALACE, S. E., *8th Aug.*, 1889.

MY DEAR SIR:

I am directed by the Archbishop of Canterbury to acknowledge your letter of the 1st inst., and to convey through you to the Joint Societies of American Engineers his sincere thanks for the address which they have had the kindness to send.

They acknowledged an honor done to them on the occasion of
Lambeth Palace, but His Grace feels that it is he who is honored
and appreciation which they have shown; and he is gratified to
meeting was pleasant to them as it was to him.

I remain, dear Sir,
Yours very truly,
ST. CLAIR DONA

JAMES FORREST, ESQ.

THE DEANERY, WESTMINSTER, S. W.
Aug. 1, 1889.

MY DEAR SIR:

I hardly know how to express sufficiently the gratitude I feel for the very kind address which I have just received from the American Engineers, whose recent visit to London gave so much pleasure to many, who, like myself, lay outside the circle of their professional brethren in the Old Country.

I rejoice that I was able to help them and their friends to pass an hour under the roof of the Abbey, with interest to themselves, and I heartily wish that I could have done more justice both to the associations of the place and to such honored guests.

It is not easy, on such occasions, to take the place of my much loved predecessor, but it is always delightful to try to carry out a work that lay so near his heart, that of aiding all who speak our tongue to appreciate the associations of a building, which, in a very real sense, is the common property of us all.

I believe that I am right in asking you to convey my thanks to those to whom I owe a document which I greatly value.

Very truly yours, G. G. BRADLEY.

TO HENRY R. TOWNE, ESQ., *Pres. of the American Society of Mechanical Engineers.*

---

24 PARK LANE, W., *Aug.* 9, 1889.

DEAR SIR:

I beg to acknowledge, with grateful thanks, the receipt of the very kindly-worded address which you have been good enough to send me on behalf of the American Engineering Societies, the representatives of which I had the honor and pleasure of entertaining on the occasion of their visit to London.

Believe me,
Yours sincerely,
BRASSEY.

TO HENRY R. TOWNE, ESQ., *Pres. of the American Society of Mechanical Engineers.*

SECRETARY'S OFFICE, WHITEHALL CLUB,
29th July, 1889.

TO HENRY R. TOWNE, ESQ., PRES. OF THE AMERICAN SOCIETY OF MECHANICAL ENGINEERS.

MY DEAR SIR:

I beg to acknowledge the receipt of the "Address of Thanks" you have so kindly sent to our members, and to inform you that I have placed it in the hall of the club.

I sincerly hope that those of your members who honored us with a visit, found the club comfortable.

I remain, dear Sir,
Yours faithfully,
G. S. BROWNE, *Secretary.*

GREAT WESTERN RAILWAY, GEN. MANAGER'S OFFICE, PADDINGTON STATION,
London, W., *2d August*, 1889.

DEAR SIR:

The address of thanks forwarded to me on the 1st ultimo, was read to the Directors at their last meeting, and I am instructed by them to state that they

were pleased to learn that the arrangements made in connection with the visit of the representatives of the American Engineering Society to Windsor had given satisfaction to those interested.

I am, dear Sir, Yours faithfully,

(For the Gen. Mgr.)

A. BURR.

TO HENRY R. TOWNE, ESQ., *Pres. Am. Soc. of Mechanical Engineers.*

LONDON AND NORTHWESTERN RAILWAY, MECHANICAL ENGINEER'S OFFICE,
Crewe Works, *September* 12, 1889.

MY DEAR SIR:

I am obliged by the receipt of the address you have been good enough to forward me through the Secretary of our Institution of Civil Engineers, having reference to the visit paid by your Societies to these works a short time since.

If I have been able to contribute in any way towards the success and pleasure of the visit of you and your comrades to this country, I shall be more than satisfied, and the recollection of the visit will always be a pleasant one to me.

With reference to the photograph which was taken on the occasion, I have sent 114 copies, addressed to our New York Agent, Mr. Barratoni, 852 Broadway, with request that he will have them properly distributed.

Attached is a copy of the letter which I have enclosed with each photograph, asking for an acknowledgment, so that I may know they have reached the persons for whom they are intended.

Yours faithfully,

F. W. WEBB, *Chief Mechanical Engineer.*

HENRY R. TOWNE, ESQ., *Pres. Am. Society Mechanical Engineers*, 64 Madison Avenue, N. Y. City.

The enclosure, accompanying Mr. Webb's letter to Mr. Towne about the photographs, is as follows:

LONDON AND NORTHWESTERN RAILWAY, MECHANICAL ENGINEER'S OFFICE,
Crewe Works, *August* 9, 1889.

DEAR SIR:

I now have pleasure in sending you copies of the photographs I promised, as a little memento of your visit to these Works on June 7, 1889. A post-card, acknowledging the safe receipt of these, will be esteemed a favor; or, what would be better still, if you have a carte-de-visite or cabinet photograph of yourself, and would send it to me, I should be glad to put it in my collection.

With kind regards, I am yours faithfully,

F. W. WEBB.

LONDON AND SOUTHWESTERN RAILWAY,
GENERAL MANAGER'S OFFICE, WATERLOO BRIDGE STATION, S. E.,
London, *August* 2, 1889.

DEAR SIR:

I have to acknowledge the receipt of the "[illegible]
can Engineers who recently visited Europe, to the [illegible], D[illegible]
cers of this Company, which I have placed b[illegible]
me to state how highly gratified they are to kn[illegible]
Officers contributed to the convenience and c[illegible]
were in this country.

Yours [illegible]

HENRY R. TOWNE, ESQ.

MIDLAND RAILWAY, SECRETARY'S OFFICE,
Derby, *September* 17, 1889.

DEAR SIR:

The Chairman, Directors, and Officers of this Company have requested me to acknowledge the receipt from the joint party of American Engineers, of the address expressing their obligations for the facilities afforded them in visiting the Locomotive and other Works of this Company, and for the hospitality tendered on that occasion.

I beg to assure you that my Directors and my colleagues have experienced the greatest pleasure and gratification from the visit of those distinguished representatives of engineering science, in a country so closely allied to ourselves in the brotherhood of race and language.

We heartily reciprocate your expressions of good-will and friendship, and hope that the relations existing between the two nations may always be such as to enable each to rely with confidence upon the friendly assistance of the other in a generous rivalry in all the arts which conduce to national peace, progress, and unity.

I am yours faithfully,
JAMES WILLIAMS, *Secretary.*

HENRY R. TOWNE, ESQ., *Pres. of the American Society of Mech. Engineers*, 64 Madison Avenue, N. Y. City.

SOUTHEASTERN RAILWAY, GENERAL MANAGER'S OFFICE,
London Bridge Station, S. E., *August* 2, 1889.

MY DEAR SIR:

I have had much pleasure in submittting to my Directors the resolution of the three leading American Engineering Societies visiting Europe, expressing their thanks to the Chairman, Directors, and Officers of the Southeastern Railway Company, for the facilities given them in their recent passage between London and Paris via Boulogne and Folkestone.

My Directors desire me to state that it gave them very much pleasure to be of any service to so eminent a party of American Engineers, and will, at all times, be prepared to extend to these gentlemen all the courtesy and attention they possibly can.

On the part of the Officers of the Company, I am desired to express their thanks for the kind acknowledgments made to them, and, further, to say that they will have very much satisfaction at any time in seconding the desire of the Chairman and Directors to make future journeys of the American Engineers over the Southeastern Railway and its connections as agreeable as possible.

Yours faithfully, MYLES FENTON, *General Manager.*

HENRY R. TOWNE, *Pres. of the American Society of Mech. Engineers.*

LONDON, CHATHAM AND DOVER RY.,
CONTINENTAL MANAGER'S OFFICE,
VICTORIA STATION, PIMLICO,
London, S. W., *Aug.* 10, 1889.

MY DEAR SIR:

Mr. Forrest has forwarded me on the kind address of thanks which the American Engineers have been good enough to address to me in return for the little I was able to do towards the enjoyment of their visit to this country.

I take this vote of thanks as an acknowledgment of what our Company has done, as of course I am only the humble instrument of a powerful corporation, and thank you in the name of my Company, and on my own behalf as well.

I shall always remember with pleasure the interesting occasion of your visit, and look forward to renewing the friendships arising therefrom, either on this side of the Atlantic or on your side, at an early date.

Believe me, my dear Sir,

WILLIAM FORBES, *Continental Manager.*

HENRY R. TOWNE, ESQ., *Pres. of the American Society of Mechanical Engineers.*

THE GAS-LIGHT AND COKE CO., HORSEFERRY ROAD,
Westminster, S. W., *29th July*, 1889.

DEAR SIRS:

Acknowledging the receipt of your address of thanks in behalf of the American Engineering Societies which recently honored our Works with a visit, I am instructed to express the gratification of the Directors at having been permitted to share in the entertainment of the Joint Societies.

I am, dear Sir, Yours, faithfully,

——— PHILLIPS.

TO D. J. WHITTEMORE, HENRY R. TOWNE, ALFRED E. HUNT, ESQUIRES.
HENRY R. TOWNE, *Pres. of the American Society of Mechanical Engineers,* 280 Broadway, N. Y. City, U. S. A.

COPPED HALL,
TOTTERIDGE, HERTS., *8th Aug.*, 1889.

DEAR SIRS:

I am in receipt of the friendly communication which you have sent me on behalf of the Joint Societies of American Engineers.

You are good enough to say that the party which visited Copped Hall on the 15th of June last have retained a pleasant recollection of their visit, and I beg to assure you and them that to me also the recollection will always be a delightful one.

It occurred to me that the representation of one of the plays of Shakespeare afforded an appropriate occasion upon which men of our race, from both sides of the Atlantic, could fitly meet together in perfect and loving sympathy; for Shakespeare belongs equally to both branches of our great family. And the language in which he wrote, a language which has proved itself to be more potent as an instrument of the higher civilization and more replete with fecundity as the exponent of thought, of research, and of imagination, in every branch of philosophy, of science, and of literature, than any other tongue which has been spoken by mankind; that glorious language is our common inheritance, and should hold us together as brethren. English-speaking communities now constitute a belt of rapidly-spreading civilization, which encircles the world. That they may live in the perfect amity and communion with each other, and further their own best interests by helping and not hampering each other in that magnificent and unprecedented development which appears to be reserved for them, is, I am sure, the hearty wish of all true American patriots, as it is the sincere desire of all good men and true in the England on this side of the ocean.

Believe me to ren ,

Yours

TO D. J. WHITTEMORE, ESQ., *Past Pres. of the A*
gineers.
HENRY R. TOWNE, ESQ., *Pres. American Society of Mech. Engineers.*
ALFRED E. HUNT, ESQ., *Vice-Pres. American Institute Mining Engineers.*

[Translation of Letter from Messrs. Eiffel and De Dax.]

MR. WM. H. WILEY, REPRESENTATIVE OF THE VISITING SOCIETIES OF ENGINEERS:

I have the honor to inform you of the reception of your letter of the 4th inst., accompaning the vote of thanks which the American Engineers have been kind enough to vote to our Society.

Permit me personally, and in the name of my colleagues, to express to you how much we are touched by this testimony of the fellowship which is most precious to us, and we beg that you will transmit our most sincere thanks to our colleagues in America.

Be kind enough to accept the expression of our most distinguished sentiments.

G. EIFFEL, *President.*
A. DE DAX, *General Agent.*

(From M. Sartiaux to Mr. Wiley.)
[A Translation.]

MR. WM. H. WILEY, MEMBER OF THE COUNCIL OF THE JOINT SOCIETIES OF ENGINEERS:

I have received, with your letter of the 4th inst., the address which you have taken the trouble to send me in the name of your Administrative Council.

I am extremely sensible of the gratifying terms of that document, and I beg that you will receive and transmit to your colleagues, with my thanks, an expression of the most lively fellow-feeling.

A. SARTIAUX, *Engineer-in-Chief of the Ponts et Chaussees.*

The inscription on the piece of plate (a pitcher) presented by the German party to their principal host was as follows:

THE AMERICAN ENGINEERS
to
E. SCHROEDTER, HONORARY SECRETARY.
In Memory of their Visit to Düsseldorf,
July 2 to 6, 1889.

GENERAL INDEX TO VOL. X.

[NOTE.—Names of Authors and participants in debate are printed in SMALL CAPS; Titles of Papers are printed in *italic type.*]

PAGE

Account of certain experiments upon several methods of counterbalancing the reciprocating parts of locomotives 302
Air entrained by belts 769
Aluminium, soldering of, and welding 821
Ammonia refrigerating machine, performance of 792
Ammonia, specific heat of 627
Annular lid, strains in 32
Areas of cylinders in compound engines 59
Arms for pulleys, strength of 224

BABCOCK, GEO. H., disc., number of meetings .....
" " " compound engines for manufacturing purposes .....
" " " flow of steam in a tube .....
" " " the identification of dry steam .....
BALL, F. H., disc., expansion of timber due to water .....
" " " vapors and vapor engines .....
" " " cylinder ratios of triple expansion engines .....
" " " improved motion device for engine indicators .....
" " " tractive forces of leather belts .....
" " " the distribution of steam in the Strong locomotive .....
BALL, SIR ROBERT, disc., overhauling of a mechanical power .....
BARR, W. M., disc., phenomena of steel .....
" " " foundry cupola experience .....
" " " cost of power in engines .....
" " " sizes of tap drills .....
BEGGS, JAS., memorial notice of .....
Belts, tractive forces of .....
BILLINGS process for steel ingots .....
BINSSE, H. L., disc., diameters of cone and step pulleys .....
Bits of engine-room experience .....
Boilers, longitudinal riveted joints of .....
BOND, G. M., disc., sizes of tap drills .....
" " " phenomena of steel .....
BORDEN, T. J., disc., compound engines for manufacturing purposes .....
Boulton process for steel ingots .....
BOYD, JOHN T., disc., number of meetings .....
Brine meter .....
Brine, specific heat of .....
Bushings of steel .....

Calorimeters, errors of .....

PAGE
Calorimeter, A simple 327
Cast iron, test of the strength of 187
Central support for Corliss engines 829
Chambered holes 462
CHENEY, W. L., A system of worm gearing of diametral pitch 833
CHRYSTIE, JAMES, disc., lubrication 810
" " " electro motors for shops 828
" " " case-hardening of steel 823
CLAUSIUS, R. J. E., memorial notice of 842
Coal consumption per horse power 50
Comparative cost of steam and water power 499
Compound engines for manufacturing purposes 48
Compound engines for manufacturing purposes, dimensions of 61
Cone pulleys, diameters of 269
Consumption of steam at various speeds 722
COOPER, JOHN H., On the longitudinal riveted joints of steam-boiler shells . 707
" " disc., tractive forces of leather belts 769
" " " lubrication 813
" " " bits of engine-room experience 706
Cornish or double-beat pump valves 521
Cost of horse power per annum 55
Cost of power in non-condensing 233
Cost of power in non-condensing steam-engines 233
Cost of steam and water power, comparative 499
Cost of water-power plant 501
Cost of water horse power 500
COUCH, A. B., memorial notice of 832
Council, report of 6
Counterbalancing a locomotive 302
Counterbore in cylinders 698
Cracking of steel 434
CRANE, W. E., disc., variable load, engine speed and internal friction 183
" " " phenomena of steel 437
CRANE, T. S., disc., the piping of steel ingots 592
" " " phenomena of steel 437
" " " worm-gearing of diametral pitch 836
" " " friction of piston packing rings 397
CREELMAN, W. J., disc., bits of engine-room experience 704
CROMWELL'S method for cone pulleys 262
Crude petroleum in steam boilers 761
Cupola experience, A foundry 89
Curves of water consumption by the Novelty Iron Works 234
Cylinder diameters of marine engines 580
Cylinder lubrication 817
Cylinder ratios of triple-expansion engines 576

DAVIS, E. F. C., disc., tractive forces of leather belts 773
" " " temperature effect on the strength of iron and steel .. 718
" " " gain sharing 622
" " " bits of engine-room experience 706

PAGE
DAVIS, E. F. C., disc., lubrication 814
DEAN, F. W., distribution of steam in a Strong locomotive 687
" " disc., phenomena of steel 438
DELAMATER, CORNELIUS H., memorial notice of 836
DENTON, J. E., performance of a 35-ton refrigerating machine of the ammonia absorption type .....
" " on the identification of dry steam .....
" " steam consumption of engines at various speeds .....
" " disc., some properties of ammonia .....
" " " the president's address .....
" " " tractive forces of leather belts .....
" " " cylinder ratios of triple-expansion engines .....
" " " the steam turbine .....
" " " reducing section of bolts .....
" " " compound engines for manufacturing purposes .....
" " " some properties of vapor and vapor engines .....
" " " cost of power in steam engines .....
" " " diameters of cone and step pulleys .....
" " " variable load, speed and engine friction .....
" " " loss by friction in a transmitting dynamometer .....
" " " on the friction of piston-packing rings in steam cylinders .....
" " " grease for lubrication .....
" " " tests of strength of cast iron .....
" " " a simple calorimeter .....
" " " joints of boiler shells .....
" " " mechanics of the injector .....
" " " cost of steam and water power .....
" " " expansion of timber, due to water .....
" " " gain sharing 615
" " " flow of steam in a tube .....
Diameters of cone and step pulleys .....
Diametral pitch in worm-gearing .....
DINGEE, W. W., disc., phenomena of steel .....
Distribution of internal friction in engines .....
Distribution of steam in the Strong locomotive .....
DOLBEAR'S tests .....
DORAN, W. S., disc., lubrication .....
Drill driven by electromotor .....
Dry steam, identification of .....
" " " cylinder ratios of triple-expansion engines .....
DURFEE, W. F., disc., number of meetings .....
" " " friction of piston-packing rings .....
" " " a foundry cupola experience .....
" " " compound engines for manufacturing purposes ..
" " " the identification of dry steam .....
DUTTON, C. S., disc., bits of engine-room experience .....
" " " steam consumption of engines .....
" " " tractive forces of leather belts .....
" " " reducing section of bolts .....

PAGE

DUTTON, C. S., disc., central support for Corliss engines 830
Dynamometer, calibration of 118
" transmitting, friction in 514
" attachment of 143
" principle of the Morin 116

EMERY, C. E., on cost of power in non-condensing steam engine 283
" " disc., counterbalancing a locomotive 315
" " " the identification of dry steam 378
Economy of various vapors in engines 663
Electric welding 95
Electromotors for shops 823
Engines, compound, for manufacturing purposes 48
Engines, compound, dimensions of 61
Engines, triple expansion 576
Ericsson memorial resolutions 473
ERICSSON, JOHN, memorial notice of 841
Error in the "Encyclopædia Britannica" 778
Errors of calorimeters 375
European trip, invitation 7
" " " Appendix, descriptive of 852
Exchanges in library 15
Excursions, XVIIIth meeting 31
Exhaust steam for heat 68
Expansion of timber due to the absorption of water 589
Experiments on counterbalancing the reciprocating parts of a locomotive 303
EWER, R. G., disc., phenomena of steel 453

FAWCETT, EZRA, disc., phenomena of steel 437
" " " lubrication 816
Finance Committee, report of 9
FIRMSTONE, F., disc., foundry cupola experience 93
Flow of steam in a tube 316
Formulas for saturated and superheated vapors 670
Foundry cupola experience 89
Friction of engines, distribution of internal 110
Friction of piston-packing rings in steam cylinders 392
Friction in a mechanical power 402
Friction in a train of wheel-work 406
Friction in a transmitting dynamometer 514
FRITH, A. J., note on diameters of cone and step pulleys 297
FUCH'S method for cone pulleys 281
FULLER, L. K., disc., phenomena of steel 432

Gain-sharing 600
GASKILL, HARVEY F., memorial notice of 833
Gauges, change of size in 446
Grease for lubrication 810
GREEN, HOWELL, discusses number of meetings 21
GREENHILL, A. G., discusses an error in the "Encyclopædia Britannica" 789

PAGE
GREGORY, H. P., memorial notice of..... 834
GREINER & ERPF'S improvement in cupolas..... 92
Gun-barrels of steel..... 447

HAMILTON, JR., ALEXANDER, memorial notice of..... 835
HARDWICK, WM., disc., lubrication..... 813
HEMENWAY, F. F., disc., lubrication..... 811
HIBBARD, H. D., disc., phenomena of steel..... 481
Hinsdale process for steel ingots..... 593
HOLLOWAY, J. F., disc., friction of piston-packing rings..... 398
" " " " " " " 462
" " " disc., number of meetings..... 22
HUNT, R. W., disc., phenomena of steel..... 447
HUSTON, C. L., disc., phenomena of steel..... 433
HUTTON, F. R., strains in an annular lid resisting internal pressure..... 33
" " disc., joints of boiler shells..... 714
" " " compound engines for manufacturing purposes..... 75
" " " number of meetings..... 26

IDE, A. L., disc., lubrication.....
Identification of dry steam.....
Indicators, improved device for.....
Ingots, piping of steel.....
Injector, mechanics of the.....
Improved motion device for engine indicators.....
Internal friction of engines.....

JACOBI, A. W., improved motion device in engine indicators..... 586
JACOBUS, D. S., steam consumption of engines at various speeds..... 722
Jarvis engine..... 141
JENKS, W. H., disc., temperature effect on the strength of iron and steel.... 720
" " " disc., an error in the "Encyclopædia Britannica"..... 786
JONES, DANIEL N., memorial notice of..... 836
JONES, W. R., memorial notice of..... 838
Joints of steam-boiler shells..... 707

KENT, WM., disc., electric welding.....
" " " mechanics of the injector.....
" " " phenomena of steel.....
" " " phenomena of steel.....
Keys and set screws, holding power of.....

LANZA, GAETANO, some tests of the
ratory of Applied chanics of the ..
" " an account of certain experiments on
counterbalancing the action of
locomotive.....
Lintels, cast iron, strength of.....
Leather belts, tractive forces of.....
Library Committee, report of.....

PAGE
Locomotive counterbalancing 302
Locomotive, "Sampson," the old 509
Lubricator, best form of 810
Lubricating candles 812
Lubrication of vertical engines 397
Lubrication of throttle-valve 396
LYNE, LEWIS F., bits of engine-room experience 696
" " " the use of crude petroleum in steam boilers 761
" " " disc., compound engines for manufacturing purposes 84
" " " " number of meetings 24

MCFARREN, S. J., disc., electromotors for shops 826
" " " lubrication 813
" " " manual training in schools 491
" " " cost of steam and water power 507
MAIN, C. T., on the use of compound engines for manufacturing purposes .. 48
" " disc., phenomena of steel 435
" " regulator for receiver pressure 70
Manganese in steel 447
MANNING, C. H., comparative cost of steam and water power 499
" " disc., compound engines for manufacturing purposes 84
MANSFIELD, A. K., disc., bits of engine-room experience 706
Manual training in schools, discussion on 491
MATTES, W. F., disc., variable load, engine speed, and internal friction 188
Mechanical power, overhauling of 402
Meetings, diminished number of 19
MILLER, T. S., disc., electromotors for shops 827
MILLER, WM., memorial notice of 833

NAGLE, A. F., Cornish double beat pump-valves 521
" " disc., tractive forces of leather belts 769
NASON, C. W., disc., lubrication 814
" " " gain-sharing 622
" " " vapors and vapor engines 665
" " " standards 571
Note on the steam turbine 680
Notes on the comparative loss by friction in a transmitting dynamometer 514
Novelty Iron Works curves 234
NOYE, A. A., disc., reducing section of bolts 819

ODELL, W. H., disc., compound engines for manufacturing purposes 82
Oil-cup, best form of 810
Old locomotive, "Sampson," the 509
On the use of compound engines for manufacturing purposes 48
Overhauling of a mechanical power 402

Packing rings, friction of 392
Pantagraph for high speed engines 591
PARKER, C. H., disc., vapors and vapor engines 665
" " " joints of boiler shells 714
" " " gain sharing 619

PAGE
PARKER, C. H., disc., electromotors for shops 827
PARSONS, HENRY, memorial notice of..... 838
PEABODY, C. H., a simple calorimeter..... 327
" " disc., identification of dry steam..... 379
Per cent. of steam from receiver..... 64
Performance of a thirty-five-ton refrigerating machine of the ammonia sorption type.....
Petroleum in steam boilers.....
Photographing steam jets.....
PICKERING, T. R., disc., number of meetings.....
Piping of steel.....
Piston rings, friction of packing rings.....
POPE, R. W., disc., electric welding.....
POWELL, S. W., a system of worm gearing of diametral pitch.....
President's Address, 1888, *The*.....
Proceedings of the (XVIIIth) Scranton Meeting.....
Proceedings of the (XIXth) Erie Meeting.....
Pulley arms, strength of.....
Pump valves, Cornish.....

Rack cutter.....
Ratios of cylinders in triple expansion engines.....
Reducing section of bolts.....
Refrigerating machine, performance of.....
Regulation of pressure in receiver of compound engines.....
Regulation of receiver pressure.....
Relative areas of cylinders in compound engines.....
Reynold's valves.....
RICHARDS, F. H., disc., size of tap drills.....
" " " phenomena of steel.....
Rifling of gun barrels.....
ROBB, D. W., the old locomotive "Sampson".....
ROGERS, W. S., disc., compound engines for manufacturing purposes.....
" " " number of meetings.....
RUTHERFORD, L. H., the strains in an annular lid :

Saturated vapors.....
SCHEFFLER, F. A., a foundry cupola experience.....
" " disc., joints of boiler shells.....
" " " lubrication.....
SCHUHMANN, GEO., disc., variable load, speed, and engine friction.....
" " " friction of piston packing rings.....
SCRANTON, W. H., memorial notice of.....
SEE, HORACE, President's Address.....
SEE, J. W., *Standards*.....
Self-oiling boxes.....
Set screws, holding power of.....
Shrinkage of steel in hardening.....
Shrinkage of tires.....
Shrinkage for steel.....

PAGE

Simple calorimeter 327
SMITH, C. A., *improved method of finding the diameters of cone and step pulleys* 269
SMITH, OBERLIN, disc., standards 567
" " " overhauling of a mechanic power 419
" " " the identification of dry steam 381
" " " electric welding 104
" " " sizes of tap drills 457
" " " phenomena of steel 442
" " " bits of engine-room experience 708
SMITH, SCOTT A., tractive force of leather belts on pulley faces 765
" " disc., central support for Corliss engines 830
" " " lubrication 813
Smoke-box vacuum 695
SNELL, H. I., disc., a foundry cupola experience 90
Some properties of ammonia 627
Some properties of vapor and vapor engines 648
Some tests of the strength of cast iron 187
SPANGLER, H. W., disc., cylinder ratios of triple expansion engines 583
" " " steam consumption of engines 758
Speed and load affecting friction of engines 138
SPRAGUE, W. W., disc., lubrication 811
" " " the distribution of steam in the Strong locomotive .. 691
St. Louis pump valves 531
Standards 542
Standards, committee on 479, 575
Steam and water-power, comparative cost of 499
Steam engines, cost of power in 233
Steam hammer piston rods 820
Steam turbine, note on 680
Steel, case-hardening of 823
Steel phenomena 431
Steel for boilers 439
Steel for head shafts 435
Step pulleys, diameters of 269
STETSON, GEO. R., disc., phenomena of steel 435
Strains in an annular lid 18
Strength of electric welds 100
Strong locomotive, Distribution of steam in 687
Stuffing boxes of cylinders 699
Sulphur in engine bedding 701
Superheated vapors 670
Superheating of steam jets 391
SUPLEE, H. H., disc., standards 571
" " " central support for Corliss engines 829
" " " compound engines for manufacturing purposes 78
" " " foundry cupola experience 93
" " " joints of boiler shells 714
" " " cylinder ratios of triple expansion engines 583
SWASEY, AMBROSE, disc., the steam turbine 681

PAGE
SWEET, J. E., disc., diameters of cone and step pulleys 295
" " " sizes of tap drills..... 459
" " " reduced section of bolts..... 818
" " " phenomena of steel..... 444
" process for steel ingots..... 593
System of worm-gearing of diametral pitch..... 833

TABOR, HARRIS, disc., variable load and internal friction..... 167
Tap drills..... 455
Temperature effect on the strength of iron and steel..... 717
Tensile strength of steel.....
Thanks, Resolutions of, Erie (XIXth) meeting.....
Thanks, Resolutions of Scranton (XVIIIth) meeting .....
The longitudinal riveted joints of steam-boiler shells.....
The piping of steel ingots.....
The strains in an annular lid resisting internal pressure.....
The use of crude petroleum in steam boilers.....
THOMSON, ELIHU, disc., soldering and welding of aluminum.....
THURSTON, R. H., on the distribution of internal friction in engines.....
" " " variable load, internal friction and engine speed and work.
" " " disc., number of meetings.....
" " " " compound engines for manufacturing purposes.....
" " " " friction of piston packing rings.....
Timber, expansion of, due to water.....
Topical discussions of the (XVIIIth) meeting.....
Topical discussions of the (XIXth) meeting .....
Torsion of steel.....
TOWNE, H. R. *gain sharing*.....
" " " disc. standards.....
" " " " expansion of timber, due to water.....
" " " " electromotors for shops.....
" " " " central support for Corliss engines .....
" " " " joints of boiler shells..... 7
" " " " lubrication.....
" " " " tractive forces of leather belts.....
Tractive forces of leather belts on pulley faces.....
Trade schools.....
Transmitting dynamometer, friction in.....
Triple-expansion engines, cylinders of.....
TRUMP, C. N., disc., number of meetings .....
Turbine, note on the steam .....

UNWIN, W. C., disc., an error in the "Encyclopædia Britannica".....

Valve rods of steel.....
Valve stems.....
Valves.....
Valves, Cornish, for high service pump at Providence.....
Vapors and vapor engines .....
Vapors and vapor engines, some properties of.....
Vapors, saturated and super-heated.....

PAGE

Variable load, internal friction, and engine speed and work 138
Variation of pitch of screw threads 465

Water as a lubricant 395
Water, per H. P. per hour 252
Water-power plant, cost of 501
WEBB, J. B., an error in the "Encyclopædia Britannica" 778
" note on the steam turbine 680
" overhauling of a mechanical power 402
" the mechanics of the injector 339
" disc., standards 572
" " gain sharing 622
WEBBER, SAMUEL, notes on the comparative loss by friction in a transmitting dynamometer, under different loads and speeds ... 514
WEIGHTMAN, W. H., disc., identification of dry steam 379
Welding, electric 95
WHEELOCK, JEROME, disc., cost of power in steam engines 264
" " " improved method for finding diameters of cone and step pulleys 269
" " " compound engines for manufacturing purposes. 77
" " " phenomena of steel 453
WHITEHEAD, G. E., disc., sizes of tap drills 455
" " " variation of pitch in screw threads 465
" " " reducing section of bolts 821
" " " phenomena of steel 455
WHITHAM, J. M., cylinder ratios of triple-expansion engines 576
Wobble drill 461
WOLFF, A. R., disc., steam consumption of engines at various speeds 758
WOOD, DE VOLSON, expansion of timber due to the absorption of water 539
" " some properties of ammonia 627
" " formulas for saturated and super-heated vapors 670
" " some properties of vapor and vapor engines 648
" " disc., steam consumption of engines 759
" " " refrigerating machine 808
" " " cylinder ratios of triple-expansion engines 584
" " " President's address 494
" " " compound engines for manufacturing purposes ... 81
" " " reducing section of bolts 820
" " " engines 648
" " " number of meetings 26
" " " gain sharing 619
WOODBURY, C. J. H., electric welding 95
" " disc., electromotors for shops 824
" " " soldering and welding of aluminum 821
" " " reducing section of bolts 821
" " " variable load, speed, and engine friction 171
" " " loss by friction in a transmitting dynamometer . 519
WOOLSON, O. C., disc., sizes of tap drills 461
Worm-gearing of diametral pitch 383
YOST, T. M., disc., phenomena of steel 453

CONTENTS AND GENERAL INDEX

OF THE

TRANSACTIONS

OF THE

American Society of Mechanical Engineers,

VOLS. I., II., III., IV., V., VI., VII., VIII., IX., X.

NEW YORK:
PUBLISHED AT THE ROOMS OF THE SOCIETY,
64 MADISON AVENUE.
1890.

PAPERS PRESENTED

TO THE

AMERICAN SOCIETY OF MECHANICAL ENGINEERS

FROM

NOVEMBER, 1880, TO MAY, 1889.

Vol. I.

			PAGE
I		Proceedings, New York (Ist) Meeting.	1
II	HOLLEY, A. L.	The Field of Mechanical Engineering	23
III	THURSTON, R. H.	President's Inaugural Address	7
IV	SELLERS, COLEMAN	The Metric System	29
V	REESE, JACOB	Regenerating Metallurgic Furnaces.	57
VI	JOHNSON, LEWIS	Putting a New Crank-pin in the Engine of the S. S. *Knickerbocker*	69
VII	WOODBURY, C. J. H.	Measurement of the Friction of Lubricating Oils	73
VIII	PORTER, C. T.	Strength in Machine Tools.	119
IX	STETSON, G. R.	Standard Sizes of Screw Threads	123
X	HOLLEY, A. L.	An Adaptation of the Bessemer Plant to the Basic Process	131
XI	SWEET, JOHN E.	Friction as a Factor in Motive Power Expenses	143
XII	HOADLEY, J. C.	High Ratios of Expansion and Distribution of Unequal Pressures in Single and Compound Engines	155
XIII	WOLFF, A. R.	The Value of the Study of the Mechanical Theory of Heat	211
XIV	ROBINSON, S. W.	Efficiency of the Crank	221
XV	HAGUE, CHARLES A.	Mechanical Correctness	239
XVI	LYNE, L. F.	Packing for Piston Rods and Valve Stems	243
XVII	ROBINSON, S. W.	Cushion Adjustment in Engines	255
XVIII	STIRLING, ALLAN	On Practical Methods for Greater Economy of Fuel in the Steam Engine	265

Vol. II.

XIX		Proceedings, Hartford (IId) Meeting.	1
XX	ROBINSON, S. W.	A Rational System of Piston Packing	19
XXI	EMERY, CHARLES E.	Experiments with Non-conductors of Heat	34

PAGE

XXII.....EMERY, CHARLES E....Alteration to the Cross-head of a Corliss Engine..... 40
XXIII.....HOADLEY, J. C.....Use of the Calorimeter as a Pyrometer for High Temperatures..... 42
XXIV.....SMITH, OBERLIN.....Experimental Mechanics..... 55
XXV.....HEWITT, WILLIAM.....The Continuous Rod-mill of the Trenton Iron Co..... 70
XXVI.....BOND, GEORGE M.....Standard Measurements..... 80
XXVII.....NAGLE A. F.....Formula for Horse-power of Leather Belts..... 91
XXVIII.....MELVIN, D. N.....An Improved Mercury Column..... 98
XXIX.....HARRISON, WILLIAM H. The First Rolling Mill in America.. 103
XXX.....LEAVITT, E. D., JR....The Superior..... 106
XXXI.....JOHNSON, LEWIS.....A Brief Treatise on the Steamboat Cam..... 122
XXXII.....THURSTON, R. H.....On the Ratio of Expansion at Maximum Efficiency..... 128
XXXIII..... { WOLFF, ALFRED R...Most Economical Point of Cut-off in DENTON, J. E. (*1st paper*) Steam Engines..... 147
XXXIV..... .....Discussion of XXXII and XXXIII... 180
XXXV..... { WOLFF, ALFRED R...On the Most Economical Point of DENTON, J. E. (*2d paper*) Cut-off in Steam Engines..... 281
XXXVI.....PORTER, H. F. J.....The Binary Absorption System of Ice Machinery..... 212
XXXVII... ...WEBBER, SAMUEL.....Experiments on the Adhesion of Leather Belts..... 424
XXXVIII.....WORTHINGTON, H. R..In Memoriam..... 228
XXXIX.....Proceedings, Altoona (IIId) Meeting 233
XL.....ROBINSON, S. W.....Counterbalancing of Engines and other Machinery having Reciprocating Parts..... 243
XLI..... .HAGUE, CHARLES A....Comparisons between Different Types of Engines..... 287
XLII.....REESE, JACOB.....Rolled Cast-steel Car Wheels..... 293
XLIII.....WOODBURY, C. J. H....Fire Protection of Mills..... 301
XLIV.....SWEET, JOHN E.....Coffin's Averaging Instrument..... 335
XLV.....THURSTON, R. H.....Note Relating to the proper Method of Expansion of Steam and Regulation of the Engine..... 338
XLVI.....RAE, T. W..... ....The Latest Methods of Submarine Telegraph Work..... 349
XLVII .....SMITH, OBERLIN.....Nomenclature of Machine Details... 358
XLVIII... ....HALL, ALBERT F.....Method of Arranging and Indexing Drawings and Patterns..... 369
XLIX.....Proceedings, New York (IVth) Meeting..... 381
L.....THURSTON, R. H.....Our Progress in Mechanical Engineering, Annual Address..... 415
LI.....ROOT, JOHN B.....An Improved Method of Screw Propulsion..... 442
LII.....WOODBURY, C. J. H....Mill Floors..... 468

PAGE

LIII.....PORTER, H. F. J.....A Self-packing Valve..... 499
LIV.....LE VAN, W. B .....The Lifetime or Age of Steam Boilers..... 503
LV.....ROBINSON, S. W.....Railroad Economics, or Notes and Observations from the Ohio State Railway Inspection Service 524
LVI.....PORTER, C. T.....A New Method of Keeping Mechanical Drawings..... 560

Vol. III.

LVII.....Proceedings, Philadelphia (Vth) Meeting..... 1
LVIII.....BAYLES, JAMES C.....A Tribute to Alexander Lyman Holley..... 34
LIX.....Introductory Remarks and Responses at the Holley Memorial Session... 48
LX.....TROWBRIDGE, W. P....Determination of Heating Surface required in Ventilating Flues.... 67
LXI.....WEBBER, SAMUEL.....Efficiency of Turbines, as affected by Form of Gate..... 78
LXII .....EGLESTON, THOMAS.....The Appointment of an U. S. Government Commission of Tests of Metals and Constructive Materials 80
LXIII.....BOND, GEO. M.....A Standard Gauge System..... 122
LXIV.....ROBINSON, S. W.....Thermo-Dynamics of Certain Forms of the Worthington and other Compound Pumping Engines.... 130
LXV ....HOADLEY, J. C.....The Specific Heat of Platinum, and the use of the Metal in the Pyrometer 174
LXVI.....ECKART, W. R.....Chronograph for Engineering Purposes, with the Hipp Escapement. 184
LXVII .....SEE, HORACE.....Built-up Work in Engine Construction..... 195
LXVIII.....FRALEY, F.....An Essay on Mechanics, and the Progress of Mechanical Science, 1824 to 1882, with Introduction by Coleman Sellers 199
LXIX.....AUCHINCLOSS, W. S ...Averaging Machines..... 205
LXX.....DU FAUR, A. F.....Expansion of Steam and Water without Transfer of Heat..... 208
LXXI..... { EDISON, T. A..... / PORTER, C. T..... } Description of the Edison Steam Dynamo 218
LXXII .....HUTTON, F. R.....Note on the Action of a Sample of Mineral Wool Used as a Non conductor around Steam Pipes..... 228
LXXIII.....TROWBRIDGE, W. P....On a Theorem of Rankine Relating to the Economy of Single-acting Expansion Engines, first published in 1851..... 236

PAGE

LXXIV.....THURSTON, R. H.....On the Several Efficiencies of the Steam Engine, and on the Conditions of Maximum Economy..... 245

LXXV.....COON, J. S.....Report of a Trial of Upright Boilers and Worthington Compound Pumping Engine at Roxbury Pumping Station..... 290

LXXVI.....WOLF, A. R.....Note on the Economy of the Windmill as a Prime Mover..... 299

LXXVII.....CURTIS, GRAM*..... Spring-face for Poppet Valves.....

LXXVIII.....ROOT, J. B†.....Screw Propulsion (*Second paper*)...

LXXIX.....MCELROY, SAMUEL.....Steam and Air Economy.....

LXXX.....GORRINGE, H. H.....Steel Ships and Modifications of Models to Meet the Requirements of the Ocean Carrying Trade.....

LXXXI.....SMITH, OBERLIN‡.....The Positions of Views upon Mechanical Drawings.....

LXXXII.....NAGLE, A. F.....Feed-water Heater Performance....

LXXXIII.....LANZA, GAETANO§.....The Strength of Wood Columns as Determined at the Watertown Arsenal.....

LXXXIV.....ROBINSON, S. W.‖.....The Strength of Members of Wrought-iron and Steel Bridges.

LXXXV.....JOHNSON, WILLIAM¶..The Fly-wheel.....

LXXXVI.....SPERRY, CHARLES.....Corrosion of the Propeller-shaft of the S. S. *City of New York*.....

LXXXVII.....PARTRIDGE, W. E.....Determination of the Capacity of the United States Standard Gallon...

Vol. IV.

XC.....Proceedings, New York (VIth) Meeting..... 1

XCI.....RAYMOND, R. W.....Alexander Lyman Holley, a Memorial Address..... 35

XCII.....THURSTON, R. H.....The Mechanical Engineer, his Work and his Policy, President's Annual Address..... 75

XCIII.....SEAMAN, W. K.....The Rail Cambering Arrangement of the Lackawanna Iron & Coal Co. 106

XCIV.....LANZA, GAETANO.....An account of Certain Tests of the Strength and Stiffness of Large Spruce Beams..... 119

XCV.....HAYWARD, H. S.....Adjustable Cut-off for Marine Engines..... 136

* Republished in full, *American Machinist*, June 3, 1882.
† " " abstract, *Mechanics*, April 29, 1882.
‡ " " full, *Mechanics*, May 20, 1882, and *American Machinist*, May 13, 1882.
§ " " " *Jour. Franklin Inst.*
‖ " " " *Van Nostrand's Mag.*, Vol. XXVI., No. 5, p. 401.
¶ " " " *American Machinist*, May 13, 1882.

PAGE

XCVI.....ALLEN, F. B.....The Protective Value of Boiler Inspection..... 142
XCVII.....ROBINSON, S. W.....Back Pressure on Valves..... 150
XCVIII.....WEBB, J. B.....Belting to connect Shafts which are not Parallel, and do not Intersect 165
XCIX.....WEBB, J. B.....A New Form of Steam Engine Indicator 182
C.....HILL, C. C.....Difficulties of Road Locomotion; their Cause and Cure..... .....
CI.....SMITH, OBERLIN *.....The Systematic Preservation of Drawings.....
CII.....ROBINSON, S. W. †.....Supplement to Thermo-dynamics of the Worthington and other Compound Pumping Engines.....
CIII.....COLIN, ALFRED.....Technical Schools for Artisans.. ...
CIV.....WHEELER, NORMAN....Launching Ships, Side on.....
CV.....EGLESTON, T.....Refractory Materials.....
CVI.....Proceedings, Cleveland (VIIth) Meeting..... 191
CVII.....HOLLOWAY, J. F.....The Marine Engines on the Lakes, and a Device for getting them off the Dead Centres..... 211
CVIII.....GREEN, HOWELL.....History and Development of Winding and Pumping Machinery in the Anthracite Coal Regions of Pennsylvania..... 217
CIX.....THURSTON, R. H.....On a Newly-discovered Variation in the Effect of Prolonged Stress on Iron..... 224
CX.....WEBBER, S. S. & W. O.A New Form of Balance Dynamometer..... 227
CXI.....SWEET, JOHN E.....A New Method of Constructing a Crank Shaft..... 231
CXII.....HORNIG, JULIUS L.....Economy by Subdivision in Installation and Operation of Power and Machinery, under Varying Demand..... 233
CXIII.....SWEET, JOHN E.....A New Method of Casting Flange Pipe..... 237
CXIV.....CURTIS, GRAM.....Remarks upon the Ordinary Form of Bessemer Ingot Cranes..... 239
CXV.....KENT, WILLIAM.....The Evaporative Power of Bituminous Coals..... 249
CXVI.....COLLINS, C. C.....Balanced Valves..... 268
CXVII.....BALDWIN, WILLIAM J..On Standard Cast-iron Fittings..... 274
CXVIII.....TOWNE, HENRY R.....Cranes; a Study of Types and Details 288
CXIX.....DURFEE, W. F.....Mechanism for Manœuvring Clutch Couplings..... 311

* Republished in full in *Mechanics*, Nov. 11, 1882, and *American Machinist*, Nov. 25, 1882.
† " " *Van Nostrand's Magazine*, Vol. XXIX., No. 4, p. 329.

PAGE

CXX.....COMLY, GEO. N .....Economy in Lubrication of Machinery 315
CXXI.....RAE, T. W.....Some of the Mechanism employed in Multiplex Telegraphy..... 321
CXXII.....SMITH, OBERLIN.....Spiral Springs..... 335
CXXIII.....MAYNARD, GEO. W....The Bower-Barff Rustless Iron Process 351
CXXIV.....WEBB, J. B.....Reuleaux's Kinematic Models (Abstract)..... 367
CXXV.....DURFEE, W. F.....Balanced Vertical Engines..... 368
CXXVI.....WARD, W. E.....Beton in Combination with Iron as a Building Material..... 388
CXXVII.....THURSTON, R. H.....Note Relating to Water-hammer in Steam Pipes..... 404
CXXVIII.....HENNING, G. C.....Notes on Steel..... 410

Vol. V.

CXXIX.....Proceedings, New York (VIIIth) Meeting..... 1
CXXX.....ROBINSON, A. WELLS..Motion Curves of Cut-off Valves.... 34
CXXXI.....ANGSTROM, CARL.....A New Valve Motion..... 41
CXXXII.....TABOR, HARRIS.....Compression as a Method of Governing 48
CXXXIII.....THURSTON, R. H.....Pressure Obtainable by the Use of the Drop Press..... 53
CXXXIV.....HOADLEY, J. C.....A Tilting Water Meter for Purposes of Experiment..... 63
CXXXV.....ORDWAY, JOHN M.....Experiments upon Non-conducting Coverings for Steam Pipes, with Introduction by C. J. H. Woodbury..... 73
CXXXVI.....PICKERING, THOMAS R.American Machinery at International Exhibitions..... 113
CXXXVII.....DURFEE, W. F.....A Power Crane..... 131
CXXXVIII.....EGLESTON, T.....A Machine for Testing the Physical Properties of Metals and Alloys.. 140
CXXXIX.....SMITH, OBERLIN *.....Machine-shop Algebra.....
CXL.....THURSTON, R. H. †.... A New Theory of the Turbine.....
CXLI.....Proceedings, Pittsburgh (IXth) Meeting..... 157
CXLII.....CLOUD, JOHN W.....Helical Springs..... 173
CXLIII.....TOWNE, HENRY R.....A Drawing Office System..... 193
CXLIV.....SMITH, OBERLIN.....A Positive Speed Indicator..... 206
CXLV.....ORDWAY, JOHN M.....Experiments upon Non-conducting Coverings for Steam Pipes (*Second paper*)..... 212
CXLVI.....ROGERS, W. A.....On a Practical Solution of the Perfect Screw Problem..... 216

---

* Republished in full in *Mechanics*, Nov. 17, 1883.
† " " " " *Jour. Franklin Inst.*, Vol. CXVI., No. 696.

PAGE
CXLVII.....KENT, W.....Rules for Conducting Boiler Tests.. 260
CXLVIII.....EMERY, CHARLES E....Estimates for Steam Users..... 282
CXLIX .....LE VAN, W. B.....New York to Chicago in 17 Hours.. 301
CL.....BARRUS, GEORGE H....Comparison of Three Modern Types of Indicators..... 310
CLI ....Appendix, Report on Natural Gas.. 340

Vol. VI.

CLII.....Proceedings, New York (Xth) Meeting..... 3
CLIII .....SWEET, JOHN E.....President's Annual Address, 1884... 31
CLIV. .....DURFEE, W. F..... ...An Account of the Experimental Steel Works at Wyandotte, Michigan... 40
CLV .....HUNT, R. W.....The Original Bessemer Steel Plant at Troy 61
CLVI... .....HALSEY, FREDERIC A..A New Rock Drill..... 71
CLVII.....HEWITT, WILLIAM.....A Novel Hammer-head and Die.... 77
CLVIII.....KENT, WILLIAM.....Table of Sizes of Chimneys..... 81
CLIX.....KENT, WILLIAM.....Tables for Facilitating Calculations of Boiler Tests..... 84
CLX .....WEST, THOMAS D.....Sound Casting..... 94
CLXI.....SCHEFFLER, FRED'K A.A New Method of Constructing Horizontal Tubular Boilers..... 110
CLXII.....THURSTON, ROBERT H..Theory of the Sliding Friction of Rotation..... 123
CLXIII.....WOODBURY, C. J. H....Measurements of Friction of Lubricating Oils..... 136
CLXIV.....ORDWAY, JOHN M.....Non-conducting Coverings for Steam Pipes (*Conclusion*) 168
CLXV.....THURSTON, ROBERT H.Steam Boilers as Magazines of Explosive Energy..... 199
CLXVI.....BERGNER, THEODORE ..Recent Improvements in Drawing Boards..... 224
CLXVII..... HOBBS, A. C.....Locks and their Failings..... 233
CXLVIII .....Report of a Committee on a Standard Method of Steam-boiler Trials 256
.....Appendix to Code (I)..... 275
CLXVIII—A..... .....Discussion of a Report of a Committee on a Standard Method of Steam-boiler Trials..... 314
CLXIX .....Proceedings, Atlantic City (XIth) Meeting (1885)..... 355
CLXX.....COGGIN, FREDERICK G.Notes on the Steam Stamp..... 370
CLXXI .....HUGO, T. W..... ...Belts as Grain Conveyors..... 400
CLXXII .....THOMPSON, ERWIN W..The Manufacture of Cotton-seed Oil. 415
CLXXIII .....THURSTON, ROBERT H..On the Theory of the Finance of Lubrication, and on the Valuation of Lubricants by Consumers..... 437

PAGE

CLXXIV .....HENTHORN, JOHN T....On the Power Required to Overcome the Frictional Resistance of Engine and Shafting in Mills, and its Cost..... 461
CLXXV ..... HENNING, GUSTAVUS C. Apparatus Used in Testing Materials 479
CLXXVI .....EMERY, CHARLES E....The Polar Planimeter..... 496
.... Appendix II..... 508
CLXXVII .....ALDEN, G. I.....Technical Training at the Worcester Free Institute 510
CLXXVIII.....STIRLING, ALLAN.....Shell and Water-tube Boilers. 566
CLXXIX .....ANDERSON, JOHN W...The Adaptation of Steam Boilers to Warming Dwelling-houses..... 619
CLXXX.....WEIGHTMAN, WM. H...The Oxidation of Metals and the Bower-Barff Process..... 628
CLXXXI.....KENT, WILLIAM... ...The Torsion Balance..... 636
CLXXXII.....WARD, W. E.....Early Experiments involving the Flow of Metals..... 655
CLXXXIII.....HOADLEY, J. C.....Report of a Series of Trials of a Warm Blast Apparatus for Transferring a Part of the Heat of Escaping Flue Gases to the Furnace.... 676
Appendices III. and IV..... 830
CLXXXIV.....Topical Discussions XIth Meeting... 843
Memorial Notices of Members Deceased, Appendix V..... 872
CLXXXV .....Appendix VI., Discussion on the adoption by Letter Ballot of the Report of a Committee of the Society..... 877

Vol. VII.

CLXXXVI.....Proceedings, Boston (XIIth) Meeting 3
CLXXXVII.....HOLLOWAY, J. F.....President's Address, 1885..... 25
CLXXXVIII....EGLESTON, T.....The Basic Bessemer Process..... 34
CLXXXIX .....GALLOUPE, F. E.....Rapid Transit and Elevated Railroads..... 81
Appendix I..... 118
" III... .....129a
CXC.....THORNE, W. H.....Twist Drills..... 130
CXCI..... WEBBER, SAMUEL .....The Frictional Resistance of Shafting in Engineering Establishments 138
CXCII.....SWEET, JOHN E.....The Unexpected which often Happens..... 152
CXCIII .....ROGERS, W. A.....The Microscope in the Workshop... 164
CXCIV.....BARRUS, GEO. H.....A New Form of Steam Calorimeter. 178
Appendix II..... 182
CXCV.....COWLES, WM.....Improvement in Ferry-boats..... 190
CXCVI..... (TROWBRIDGE, W. P.) (RICHARDS, C. B....) The Rating of Steam Boilers by Horse-powers for Commercial Purposes.. 214
CXCVII.....HILL, WM.....Crystallization of Iron..... 24

PAGE

CXCVIII.....LEWIS, WILFRED.....Experiments on the Transmission of Power by Gearing. (Made by Wm. Sellers & Co.)..... 273
CXCIX.....BOND, G. M.....Standard Pipe and Pipe Threads.... 311
CC.....PEABODY, C. H.....Steam Engine Tests, at the Mass. Inst. Tech..... 328
CCI.....LANZA, GAETANO.....The Course in Mechanical Engineering at the Mass. Inst. Tech..... 338
CCII.....LANZA, GAETANO.....Transmission of Power by Belting (Expts. at the Mass. Inst. Tech).. 347
CCIII.....BALDWIN, W. J.....Notes on the Comparative Value of Metal Surfaces for warming Air.. 361
Appendix IV 374a
CCIV.....Topical Discussions (8-17)..... 375
CCV.....Proceedings, Chicago (XIIIth) Meeting 401
CCVI.....WEST, T. D.....Irregularity in the Contraction of Duplicate Iron Castings..... 422
CCVII.....TOWNE, H. R.....The Engineer as an Economist..... 428
CCVIII.....SMITH, OBERLIN.....Inventory Valuation of Machinery Plant..... 433
CCIX.....METCALFE, HENRY ....The Shop-order System of Accounts 440
CCX.....BARNABY, C. W.....Another New Steam Engine Indicator 489
Appendix V..... 511
CCXI .....SEE, H .....The Production of True Crank Shafts and Bearings..... 521
CCXII. .....TROWBRIDGE, W. P....The Relative Economy of Ventilation by Chimneys, and Ventilation by Fans 531
CCXIII .....LEWIS, WILFRED .....Experiments on the Transmission by Belting (made by Wm. Sellers & Co.)..... 549
Appendix VI 579
CCXIV .....WEBBER, W. O ..... The Relative Efficiency of Centrifugal and Reciprocating Pumps... 598
CCXV .....COGGIN, F. G.....A Novel Chimney Staging..... 612
CCXVI.... ...CRANE, T. S .....The Purification of Water for Manufacturing and Domestic Purposes. 617
CCXVII .....GIDDINGS, C. M .....A Valve Dynamometer for measuring the Power required to move a Slide Valve of different speeds and Pressures..... 631
CCXVIII .....COOPER, J. H.....Handling Grain in California..... 650
CCXIX.....TAYLOR, F. W .....The Relative Value of Water Gas and Gas from the Siemens Producer for Melting in the Open Hearth Furnace..... 661
CCXX.....BABCOCK, G. H .....Substitutes for Steam 680
CCXXI .....WOODWARD, C. M.....The Training of a Dynamic Engineer at Washington Univ., St. Louis, Mo. 742
Appendix VII..... 755

PAGE

CCXXII ..... Topical Discussions XIIIth Meeting (18–26) 784
CCXXIII ..... Appendix VIII. Memorial Notices of Members Deceased.... 827
Appendix IX. Addresses of Welcome 831
CCXXIV ..... ROBINSON, S. W * ..... Measurement of Gas Wells and other Gas Streams.

Vol. VIII.

CCXXV .... Proceedings, New York (XIVth) Meeting 1
CCXXVI ..... Report of Committee on Standard Pipe and Pipe Threads 29
CCXXVII. .... REULEAUX, F ... . Friction in Toothed Gearing 45
CCXXVIII ..... THURSTON, R. H ..... On the Friction of Non-Condensing Engines 86
CCXXIX ..... ROBINSON, A. WELLS .. Recent Improvements in Dredging Machinery 114
CCXXX ..... LANZA, GAETANO ..... Strength of Shafting Subjected to both Twisting and Bending 130
CCXXXI ..... CAMPBELL, ANDREW C. A New Conicograph..... 145
CCXXXII ..... BAKER, BENJAMIN .... Some Notes on the Working Stress of Iron and Steel 157
CCXXXIII ..... COWLES, WM. ..... Fire Boats 182
CCXXXIV ..... ALDEN, GEO. I ..... Formulæ and Tables for Calculating the Effect of the Reciprocating Parts of High-Speed Engines.... 191
CCXXXV ..... KENT, WM. .... Is Water-Gas An Economical Fuel. 225
CCXXXVI ..... BARRUS, GEO. H ..... The New Calorimeter 235
CCXXXVII .... WEST, THOS. D ..... Casting Aluminium Bronze and other Strong Metals 245
CCXXXVIII .... SMITH, OBERLIN ..... Intrinsic Value of Special Tools.... 258
CCXXXIX ..... PARTRIDGE, WM. E ... Capital's Need for High-priced Labor 269
CCXL ..... Topical Discussions XIVth Meeting 295
CCXLI ..... Proceedings, Washington (XVth) Meeting 343
CCXLII ..... THURSTON, R. H ..... A Note on Helical Seams in Boiler-Making 357
CCXLIII ..... THURSTON, R. H.. .... The Systematic Testing of Turbine Water Wheels in the United States 359
CCXLIV ..... STEARNS, ALBERT ..... A Method of Evaporating by Exhaust Steam 421
CCXLV ..... CRANE, THOS. S ..... Direct-Acting Steam Veneer Cutters 426
CCXLVI ..... RUTHERFORD, L. H. / HUITON, F. R. ..... Should a Piston Packing Ring be of the Same Thickness at Every Point. 439

---

* Presented by Title only. Republished in full in *Van Nostrand's Engineering Mag.*, Aug., 1886.

PAGE

CCXLVII.....HAWKINS, JOHN T.....The Education of Intuition in Machine Designing..... 458
CCXLVIII.....EMERY, CHAS. E.....Notes for Discussion in Relation to the Development of the Compound Engine, and the Probable Limit of Steam Pressure in Marine Engines and boilers..... 472
CCXLIX..... EMERY, CHAS. E.....Notes for Discussion on Cylinder Condensation and the Reduction of the same by the use of the Compound Engine..... 476
CCL.....EMERY, CHAS. E.....The Comparative Value of Steam and Hot Water for Transmitting Heat and Power..... 512
CCLI. .....WEBBER, SAMUEL... .Tests of the Comparative Value of Different Kinds of Belting.... .. 529
CCLII . .. .BABCOCK, GEO. H.....On a New Method of Making Tubes from Solid Bars..... 564
CCLIII..... ..RAMSAY, H. ASHTON...What are the Needs of our Navy... 574
CCLIV.....MORGAN, JOSEPH, JR...Our Coast Defense ; Its Cost and Its Mechanical Problems..... 582
CCLV .....TOWNE, HENRY R. ...Steam and Power ; The Commercial Determination of Costs..... 617
CCLVI .....KENT, WM.....A Problem in Profit Sharing..... 630
CCLVII.....DREDGE, JAMES.....Gas Lightning by Incandescence... 663
CCLVIII.....SELLERS, COLEMAN....President's Annual Address..... 676
CCLIX..... .....Topical Discussions XVth Meeting. 697
CCLX .....Memorial Notices..... 724

Vol. IX.

CCLXI.....Proceedings Philadelphia (XVIth) Meeting 3
CCLXII... ....BABCOCK, GEORGE H..President's Address..... 23
CCLXIII.....FELTON, E. C.....Notes on Results obtained from Steel Tested shortly after Rolling..... 38
CCLXIV.....SNELL, HENRY I.....Experiments and Experiences with Blowers..... 51
CCLXV.....THURSTON, R. H.....Internal Friction of Non-Condensing Engines 74
CCLXVI.....SWEET, JOHN E.....A New Principle in Steam Piston Packing 91
CCLXVII.....SNELL, HENRY I.....An Economical Method of Heating and Ventilating an Office and Warehouse Building..... 99
CCLXVIII.....VAN VLECK, FRANK...Standard Section Lining..... 107
CCLXIX.....SANGUINETTI, PERCY A.On the Divergencies in Flange Diameters of Pumps, Valves, etc., of different Makers..... 124
CCLXX.....COFFIN, JOHN.....Steel Car Axles..... 135
CCLXXI.....SMITH OBERLIN.....Power-Press Problems..... 161
CCLXXII.... {SONDERICKER, J..... / LANZA, GAETANO ....} An Investigation as to how to Test the Strength of Cements..... 172

PAGE

CCLXXIII.....LANZA, GAETANO.....Friction in Toothed Gearing..... 185
CCLXXIV.....WEBBER, WM. O.....Centrifugal Pumps and their Efficiencies..... 228
CCLXXV.....LYNE, LEWIS F.....The use of Kerosene Oil in Steam Boilers..... 247
CCLXXVI.....GRANT, JOHN J,.....The Milling Machine as a Substitute for the Planer in Machine Construction..... 259
CCLXXVII.....DODGE, JAMES M.....A New Method of Stocking and Reloading Coal..... 270
CCLXXVIII....WOOLSON, O. C.....A Railroad Bed for Bridge Structures..... 276
CCLXXIX.....PARSONS, HARRY DE B.The Influence of Sugar upon Cement 286
CCLXXX.....EMERY, CHAS, E.....An Interesting Indicator Diagram .. 293
CCLXXXI.....BALL, FRANK H.....An Improved Form of Shaft Governor..... 300
CCLXXXII..... .. Topical Discussions and Interchange of Data (XVIth Meeting)..... 324
CCLXXXIII.....Proceedings Nashville (XVIIth) Meeting..... 349
CCLXXXIV....THURSTON, R. H.....Proportioning Steam Cylinders. ... 360
CCLXXXV.....DENTON, JAMES E.....The Mechanical Significance of Viscosity Determinations of Lubricants..... 369
CCLXXXVI....BARRUS, GEO. H.....An Electric Speed Recorder..... 377
CCLXXXVII...BINSSE, HENRY LEON ..A Short Way to Keep Time and Cost 380
CCLXXXVIII..FOWLER, GEO. L.....Estimating the Cost of Foundry Work..... 390
CCLXXXIX....WEBB, J. BURKITT....A Persistent Form of Gear Tooth... 398
CCXC.....HAWKINS, JOHN T.....A Plea for the Printing-Press in Mechanical Engineering Schools. 403
CCXCI.....WHITHAM, JAY M.....Surface Condensers..... 417
CCXCII.....HAWKINS, J. T.....Automatic Regulator for Heating Apparatus..... 431
CCXCIII.....COLLINS, C. C.....A New Method of Inserting and Securing Crank Pins..... 446
CCXCIV.....TOWNE, HENRY R.....A Safety Car Heating System..... 483
CCXCV.....MATTES, W. F .....Connecting Rods..... 466
CCXCVI.....BALDWIN, W. J.....Notes on Warming Railroad Cars by Steam..... 471
CCXCVII.....COON, J. S.....Duty Trials of Pumping Engines... 476
CCXCVIII.....BARRUS, GEO. H.....The Effect of Circulation in Steam Boilers on the Quality of Steam.. 489
CCXCIX.....SCHEFFLER, FRED. A..A Foundry Cupola Experience..... 496
CCC.....NAGLE, A. F.....The Best Form of Nozzles and Diverging Tubes..... 505
CCCI.....CLEMENTS, WM. L.....Steam Excavators..... 515
CCCII..... .RANDOLPH, L. S.....Strains in Locomotive Boilers..... 534
CCCIII.....BARRUS, GEO. H.....Memoranda on the Performance of a Compound Engine..... 545

PAGE

CCCIV.....DEAN, F. W.....The Distribution of Steam in the Strong Locomotive 556
CCCV .....SWEENEY, JOHN M.....River Practice of the West 645
CCCVI.....HEWITT, WM. .....Wire Rope Fastenings 671
CCCVII.....PARSONS, H. DE B.....The Displacements and the Area Curves of Fish..... 679
CCCVIII .....THURSTON, R. H.....Large and enlarged Photographs and Blue Prints..... 696
CCCIX.....Topical Discussions and Interchange of Data (XVIIth Meeting) 703
CCCX.....Appendix. Memorial Notices of Members Deceased 737

Vol. X.

CCCXI.....Proceedings Scranton (XVIIIth) Meeting..... 3
CCCXII.....RUTHERFORD, HUTTON.The Strains on an Annular Lid Resisting Internal Pressure..... 32
CCCXIII.....MAIN, CHAS. T.....On the Use of the Compound Engine for Manufacturing Purposes, the Relative Areas of the Cylinders, and the Regulation of Pressure in the Receiver..... 48
CCCXIV.....SCHEFFLER, FRED'K A.A Foundry Cupola Experience..... 89
CCCXV.....WOODBURY, C. J. H...Electric Welding..... 95
CCCXVI.....THURSTON, R. H.....On the Distribution of Internal Friction of Engines..... 110
CCCXVII.....THURSTON, R. H.....On Variable Load, Internal Friction, and Engine Speed and Work.... 138
CCCXVIII.....LANZA, GAETANO.....Some Tests of the Strength of Cast Iron made in the Laboratory of Applied Mechanics of the Mass. Institute of Technology..... 187
CCCXIX.....EMERY, CHAS. E .....The Cost of Power in Non-Condensing Steam Engines..... 233
CCCXX.....SMITH, C. A.....An Improved Method for Finding the Diameters of Cone and Step Pulleys 269
CCCXXI.....LANZA, GAETANO.....An Account of Certain Experiments upon Several Methods of Counterbalancing the Action of the Reciprocating Parts of a Locomotive... 302
CCCXXII .....PEABODY, C. H.....Flow of Steam in a Tube 316
CCCXXIII.....PEABODY, C. H.....A Simple Calorimeter..... 327
CCCXXIV.....POWEL-CHENEY .....A System of Worm-Gearing of Diametral Pitch..... 333
CCCXXV .....WEBB, J. B.....The Mechanics of the Injector..... 339
CCCXXVI.....DENTON, J. E.....On the Identification of Dry Steam. 349
CCCXXVII ....DENTON, J. E.....On the Friction of Piston Packing Rings in Steam Cylinders..... 392
CCCXXVIII ...WEBB, J. B.....“Overhauling” of a Mechanical Power..... 402

PAGE

CCCXXIX.....Topical Discussions and Interchange of Data (XVIIIth Meeting)..... 431
CCCXXX.....Proceedings Erie (XIXth) Meeting.. 469
CCCXXXI.....SEE, HORACE.....President's Address, 1888..... 482
CCCXXXII ...MANNING, CHAS. H....Comparative Cost of Steam and Water Power..... 499
CCCXXXIII....ROBB, D. W.....The old Locomotive "Sampson"... 509
CCCXXXIV....WEBBER, SAMUEL ....Notes on the Comparative Loss by Friction in a Transmitting Dynamometer under Different Loads and Speeds..... 514
CCCXXXV.....NAGLE, A. F.....Cornish or Double-beat Pump Valves 521
CCCXXXVI....WOOD, DE VOLSON.....Expansion of Timber due to the Absorption of Water..... 539
CCCXXXVII...SEE, JAS. W.....Standards..... 542
CCCXXXVIII..WHITHAM, JAY M.....Cylinder Ratios of Triple Expansion Engines..... 576
CCCXXXIX....JACOBI, A. W.....Improved Motion Device for Engine Indicators..... 586
CCCXL.....CRANE, THOS. S.....The Piping of Steel Ingots..... 592
CCCXLI.....TOWNE, HENRY R.....Gain-Sharing..... 600
CCCXLII.....WOOD, DE VOLSON.....Some Properties of Ammonia..... 627
CCCXLIII.....WOOD, DE VOLSON.....Some Properties of Vapor and Vapor Engines..... 648
CCCXLIV.....WOOD, DE VOLSON....Formulas for Saturated and Superheated Vapors..... 670
CCCXLV.....WEBB, J. B.....Note on the Steam Turbine..... 680
CCCXLVI.....DEAN, F. W.....The Distribution of Steam in the Strong Locomotive (supplement).. 687
CCCXLVII.....LYNE, LEWIS F.....Bits of Engine Room Experience... 696
CCCXLVIII....COOPER, JOHN H.....On the Longitudinal Riveted Joints of Steam-boiler Shells..... 707
CCCXLIX.....DENTON-JACOBUS.....Steam Consumption of Engines at Various Speeds..... 722
CCCL..... ....LYNE, LEWIS F.....The Use of Crude Petroleum in Steam Boilers (supplement)..... 761
CCCLI.....SMITH, SCOTT A.....Tractive Force of Leather Belts on Pulley Faces.... 765
CCCLII.....WEBB, J. B.....An Error in the Encyclopædia Britannica..... 778
CCCLIII.....DENTON, J. E.....Performance of a Thirty-five Ton Refrigerating Machine of the Ammonia-Absorption Type..... 792
CCCLIV.....Topical Discussions and Interchange of Data, XIXth Meeting. 810
CCCLV.....Appendix I., Memorial Notices of Members Deceased during the Year..... 832
CCCLVI.....Appendix II., European Trip of the Engineers, May–June, 1889..... 851

GENERAL INDEX.

VOLUMES I., II., III., IV., V., VI., VII., VIII., IX. and X.

OF THE

TRANSACTIONS

OF THE

AMERICAN SOCIETY OF MECHANICAL ENGINEERS.

[NOTE.—In the headings, the names of authors and speakers are printed in SMALL CAPS., and the full titles of papers are printed in *italic type*, for ease of reference. The Roman figure denotes the number of the volume, and the Arabic figures which follow it give the pages.]

PAGE

Abrasion of stern bearings ..... IX. 661
Absorption system of ice machinery, H. F. J. Porter ..... II. 212
Absorptive power of vapor ..... I. 185
Abstractors for warming blast, in Pacific Mills ..... VI. 689
Acceleration of moving parts of Edison-Porter dynamo ..... III. 222
Accelerations in nozzles ..... IX. 505
Account of certain experiments upon several methods of counterbalancing the reciprocating parts of locomotives, G. Lanza ..... X. 302
Account of strength and stiffness of large spruce beams, G. Lanza ..... IV. 119
Acid process for sharpening files ..... VIII. 325
Acreage of California grain fields ..... VII. 650
Action of Roll train ..... VI. 659
Adaptation of steam boilers to warming dwelling-houses, J. W. Anderson ..... VI. 619
Adaptation of Bessemer Plant to Basic Process, A. L. Holley ..... I. 131
Address of Mayor of Cleveland ..... IV. 195
" Memorial, of A. L. Holley, R. W. Raymond ..... IV. 35
" Annual, of R. H. Thurston, 1881 ..... II. 415
" " " " 1882 ..... IV. 75
" Inaugural of " " 1880 ..... I. 7
" of Horatio Allen ..... VIII. 1
" *President's* seventh annual ..... VIII. 676
" by Mayor of Atlantic City ..... VI. 355
" *President's*, Xth meeting ..... VI. 31
" of President, 1885 ..... VII. 25
Adhesion of belts ..... VII. 555
Adhesion of leather belts, S. Webber ..... II. 224
Adjustment of planimeter ..... VI. 498
Adjustable cut-off for marine engines, H. S. Hayward ..... IV. 136

PAGE
Admission of steam, angle for ..... I. 29
Advantages of cambering machine ..... IV. 114
" " vertical engine ..... IV. 378
Aeronautics, progress in ..... II. 437; IV. 94
Advantage of thick walls in boiler setting ..... VI. 823
Aeration of water ..... VII. 626
Aero-steam engines ..... VII. 691, 738
Age or lifetime of steam boilers, W. B. Le Van ..... II. 503
Agricultural machinery, benefits of ..... VI. 38
Ainger's proof of economy of steam engine ..... VII. 685
Air entrained by belts ..... X. 769
Air, comparative values of surfaces for warming, W. J. Baldwin ..... VII. 361
Air-surface condensation of steam ..... VII. 819
Air-trap in water-piping ..... VII. 152
Air in driven wells ..... IX. 328
Air entrained by belting ..... VIII. 560
Air thermometer ..... VI. 281
Air heating in flues ..... III. 68
Air space, efficiency of ..... V. 103
Airy's formula ..... II. 83
Akerman on ferro-phosphorus alloys ..... III. 87
Alcohol engine ..... VII. 681
ALDEN, G. I., technical training at Worcester ..... VI. 510
" " formulæ for reciprocating parts of high-speed engines. VIII. 191
" " disc., adhesion of leather belts ..... II. 228
" " " formulæ for leather belts ..... II. 97
" " " friction of non-condensing engines ..... VIII. 106
" " " laboratory of mechanical engineering equipment VIII. 329
" " " engineering problems for senior students ..... VIII. 335
Aldrich's engine tests ..... VIII. 86
Allen's Anti-lamina for steam boilers ..... IX. 254
ALLEN, F. B., protective value of boiler inspection ..... IV. 142
" " disc. screw propulsion ..... II. 468
" " " age of steam boilers ..... II. 517
ALLEN, HORATIO, address of ..... VIII. 1
Alloys of maximum strength ..... II. 416
" " copper for burners and cartridges ..... III. 93
" " copper-tin-zinc ..... VIII. 336
ALMOND, T. R., disc., intrinsic value of special tools ..... VIII. 267
" " " capital's need for high-priced labor ..... VIII. 287
" " " smoke in blacksmith shops ..... VIII. 697
" " " piston packing ..... IX. 94
" " " steel car axles ..... IX. 151
Alteration to cross-head of Corliss engine, C. E. Emery ..... II. 40
Alternating stresses ..... VIII. 162
Alum in water-purification ..... VII. 625
Aluminium for springs ..... VII. 385
Aluminium bronze, casting of, T. D. West ..... VIII. 245
Aluminium bronze, corrosion of ..... VIII. 335
" soldering of, and welding ..... X. 821

PAGE
Amendment to Rules.....II. 7, 12, 236, 237, 290, 412
" " ..... IV. 10, 11
" " Committee on..... IV. 15
American Association for the Advancement of Science..... V. 29
American machinery at Internat. Exhibitions, T. R. Pickering..... V. 113
Ammonia-gas engine..... VII. 687
" refrigerating machine, performance of..... X. 792
" specific heat of..... X. 627
Amsler's planimeter..... VI. 496
Analysis of blast furnace slags..... III. 233
Analyses of chilling irons..... IX. 339
Analysis of coals at Pacific Mill..... VI. 762
" " flue gases..... VI. 786
" " Siemens gas..... VII. 671
ANDERSON, J. W., Adaptation of steam boilers to warming dwelling-houses..... VI. 619
" " disc., shop-order system of accounts..... VII. 471
Anemometer, Wollaston..... VI. 725
Aneroid, incased, as draft guage..... VI. 728
A new conicograph, Andrew C. Campbell..... VIII. 145
A new method of making tubes from solid bars, G. H. Babcock..... VIII. 564
Angles of twist drills..... VII. 130
ANGSTROM, C., a new form of valve motion..... V. 41
Annealing furnaces for castings..... VIII. 296
Annealing of steel.....IX., 150, 723
Annealing of steel castings..... IX. 344
Annealing furnace for copper..... V. 150
Annual address, R. H. Thurston, 1881 (see also address)..... II. 415
" " " " 1882..... IV. 75
Annual cost of steam power..... III. 255
" meeting, change of date..... IV. 14
" " proceedings of 1880..... I. 1
" " " 1881..... II. 383
" " " 1882..... IV. 3
" " " 1883..... V. 3
Annular jet for ejector..... VII. 804
" lid, strains in..... X. 32
Another new steam engine indicator, C. W. Barnaby..... VII. 489
Anthony's chronograph..... IX. 379
Anthracite and bituminous coal burning engines..... IX. 631
Anthracite culm-burning, methods for..... VII. 390
Anthracite, S. S. pressures in..... VIII. 475
Anvils for drop press..... V. 60
Apparatus for measuring radiation from brick-work of a boiler setting VI. 808
" *used in testing materials*, G. C. Henning..... VI. 479
Appendix (I.) To code of rules for boiler tests..... VI. 275
" (II.) Special case of planimeter..... VI. 508
" (III.) Agreement for tests of a warm-blast apparatus..... VI. 830
" (IV.) On the combustion of fuel, Hoadley..... VI. 832
" (V.) Memorial notices of members deceased..... VI. 872

PAGE

Appendix (VI.) Discussion on the adoption of the code for conducting boiler trials ..... VI. 877
" Bessemer Ingot cranes ..... IV. 245
" estimates for steam users ..... V. 290
" notes on steel ..... IV. 415
" on natural gas ..... V. 340
" (I.) Charter of Meigs Elev. R. R ..... VII. 118
" (II.) On flow of superheated steam through an orifice ..... VII. 182
" (III.) Action of forces on wheels of Meigs Elev. R. R ..... VII 129*a*
" (IV.) On cubic feet of air per minute in flue ..... VII. 374*a*
" (V.) On modified spring forces for indicator drum ..... VII. 511
" (VI.) Nagle's tables for belt-transmission ..... VII. 579
" (VII.) St. Louis training school course ..... VII. 755
" (VIII.) Memorial notices of members deceased ..... VII. 827
" (IX.) Addresses of welcome, XIIth Meeting ..... VII. 831
" descriptive of European trip of 1889 ..... X. 852
Application of the efficiency diagram ..... III. 274
Appointment of U. S. Commission on test of materials, T. Egleston ..... III. 80
Appold fan ..... IX. 231
Arms for pulleys, strength of ..... X. 224
Armature of Edison Dynamo ..... III. 219
Areas of cylinders in compound engines ..... X. 59
ARNOLD, BISHOP, memorial of ..... VIII. 727
Arnot products-of-combustion engine ..... VII. 703
Arnot's thermometer stove ..... IX. 436
Arrangement of casting pits for Bessemer process ..... VII. 64
ARVINE, F. W., disc. Friction of lubricating oils ..... VI. 160
Ashes and residue in test of boilers at Pacific Mills ..... VI. 801
ASHWORTH, D., disc., drilling holes in glass ..... VII. 393
" " " the unexpected which often happens ..... VII. 159
" " " different kinds of belting ..... VIII. 554
" " " power for machine tools ..... VIII. 312
" " " a problem in profit sharing and the labor question ..... VIII. 659
" " " experiments with blowers ..... IX. 63
" " " piston packing ..... IX. 96
Atkinson Edward, Address of Welcome ..... VII. 831
Atlantic Works CS_2 Engine ..... VII. 684
AUCHINCLOSS, W. S., Averaging Machines ..... III. 205
Automatic Sprinklers ..... II. 326
Automatic regulator for heating apparatus, J. T. Hawkins ..... IX. 431
Automatic filtration for boiler feeds ..... VII. 628
Automatic stoker ..... VII. 790, 791, 796
Averaging Instrument, Coffin's, J. E. Sweet ..... II. 335
Averaging Machines, W. S. Auchincloss ..... III. 205
Axles, car, of steel ..... IX. 135
Axles, effect of shock on ..... VII. 260
Axles of steel ..... VIII. 172

Babbitt-bushing, change of form in ..... VII. 153

PAGE
Babbitt Metals for Journals.....III. 225, 227; V. 153
" " " " pressures allowable on..... III. 227
BABCOCK, G. H., On a new method of making tubes from solid bars.. VIII. 564
" " substitutes for steam..... VII. 680
" " President's address, 1887..... IX. 23
" " disc., friction as a factor..... I. 151
" " " adoption of code for boiler trials..... VI. 880
" " " belts as grain conveyers..... VI. 411
" " " boilers for warming dwelling-houses..... VI. 625
" " " data for steam heating..... VI. 857
" " " the flow of metals..... VI. 667
" " " frictional resistance of engines and shafting. VI. 475
" " " manufacture of cotton-seed oil..... VI. 434
" " " technical education..... VI. 544
" " " motion of steel springs..... VI. 869
" " " pressures and speeds of journal bearings....VI. 849, 856
" " " report of committee on steam boiler trials...VI. 327, 349
" " " shell and water-tube boilers..... VI. 596
" " " welded *vs.* riveted work..... VI. 845
" " " cams for engine-valves..... VII. 785
" " " condensation in exhaust-pipes..... VII. 820
" " " economy of ventilation by chimneys..... VII. 541
" " " frictional resistance of shafting..... VII. 147
" " " moulds for printing-press ink-rolls..... VII. 812
" " " rating of boilers by horse-powers..... VII. 222
" " " smoke-preventing furnaces..... VII. 790
" " " steam calorimeter..... VII. 183
" " " true crank shafts and bearings..... VII. 527
" " " valve dynamometer..... VII. 638
" " " annular jet for ejector..... VII. 805
" " " the new calorimeter..... VIII. 242
" " " drawing paper..... VIII. 305
" " " power for machine tools.....VIII. 309, 312, 627
" " " sand blast process..... VIII. 376
" " " turbine tests..... VIII. 416
" " " evaporating by exhaust steam..... VIII. 424
" " " cylinder condensation and the compound engine..... VIII. 490
" " " steel for boilers..... VIII. 498
" " " steam and hot water..... VIII. 525
" " " steam and power costs..... VIII. 627
" " " working pressure of gear teeth..... VIII. 704
" " " a safety car heating system..... IX. 462
" " " automatic regulators for heating apparatus... IX. 436
" " " driven wells..... IX. 329
" " " kerosene oil in steam boilers..... IX. 257
" " " piston packing..... IX. 96
" " " proportioning steam cylinders..... IX. 365
" " " shaft governor..... IX. 311
" " " soft castings..... IX. 338

PAGE

BABCOCK, G. H., disc., steel car axles ..... IX. 160
" " " technical education ..... VI.
" " " number of meetings ..... X. 20
" " " compound engines for manufacturing purposes ..... X. 76
" " " flow of steam in a tube ..... X. 323
" " " the identification of dry steam ..... X. 379
Babcock and Wilcox governor ..... IX. 318
Babcock's governor ..... IX. 312
Back pressure as modifying economy ..... III. 283
Back pressure on valves, S. W. Robinson ..... IV. 150
Badges, uniformity in ..... IX. 9
Baffle-plates in smoke-flues ..... VII. 388
BAILEY, JACKSON, memorial of ..... VIII. 728
Balance cylinder for vertical engine ..... IV. 376
Balanced dynamometer, new form of, S. S. & W. O. Webber ..... IV. 227
" valves, see also Valves, balanced.
" *valves*, C. C. Collins ..... IV. 268
" valves, in the "Superior" ..... II. 114
" *vertical engines*, W. F. Durfee ..... IV 368
" valves, leakage of ..... IX. 614, 642
" valve of engine at Wyandotte ..... VI. 64
Balancing of straight line engine ..... IV. 386
Balance, the torsion, Wm. Kent ..... VI. 636
Balancing rope sheaves ..... VIII. 317
BAKER, BENJAMIN, some notes on the working stress of iron and steel ..... VIII. 157
BALDWIN, S. W., presents the J. C. Hoadley apparatus to society ... VIII. 20
" " disc., strains in locomotive boilers ..... IX. 540
BALDWIN, W. J., standard cast-iron fittings ..... IV. 274
" " Note on comparative values of metal surfaces for warming air ..... VII. 361
" " Notes on warming railroad cars by steam ..... IX. 471
" " disc. descending smoke-flues ..... VII. 388
" " " standard pipe and pipe threads ..... VII. 323
" " " balanced vertical engines ..... IV. 384
Ballast for railroads ..... IX. 471
Ballast unloader ..... IX. 527
Ball bearings ..... IX. 330
BALL, FRANK H. An improved form of shaft governor ..... IX. 300
" " disc., piston packing ..... IX. 94
" " " expansion of timber due to water ..... X. 540
" " " vapors and vapor engines ..... X. 664
" " " cylinder ratios of triple expansion engines ..... X. 583
" " " improved motion device for engine indicators. X. 591
" " " tractive forces of leather belts ..... X. 773
" " " the distribution of steam in the Strong locomotive ..... X. 694
BALL, SIR ROBERT, disc., overhauling of a mechanical power ..... X. 419
BANCROFT, J. S., disc., frictional resistance of engines and shafting. VI. 575

PAGE

BANCROFT, J. S., disc., motion of steel springs..... VI. 869
" " " pressures and speeds of journal bearings... VI. 850
" " " shell and water-tube boilers..... VI. 594
" " " packing for pneumatic engines..... VII. 381
Band saws, punching of..... IX. 730
Banister, George, alloys for tempering steel..... IX. 725
BARBER, F. M., disc., coast defense..... VIII. 600
Barber's air engine..... VII. 694
BARNES, P., disc., power cranes..... V. 138
" " " Bessemer plant, at Troy..... VI. 68
" " " sound casting..... VI. 103
BARNABY, C. W., another new steam engine indicator..... VII. 489
" " disc., a valve dynamometer..... VII. 644
" " " smoke in blacksmith shop..... VIII. 697
Barnard, W. T., on technical education..... VIII. 468
BARR, W. M., disc., test commission..... III. 106 119
" " " Edison's steam dynamo..... III. 227
" " " mineral wool..... III. 232
" " " standard fittings..... IV. 280
" " " new valve motion..... V. 46
" " " non-conducting coverings..... V. 107
" " " sound castings..... VI. 105
" " " driven wells..... IX. 329
" " " phenomena of steel..... X. 453
" " " foundry cupola experience,... ..... X. 94
" " " cost of power in engines..... X. 264
" " " sizes of tap-drills..... X. 453
Barometer, corrected at Lawrence..... VI. 729
Barrel calorimeter, test of..... VI. 339
BARRUS, G. H., comparison of three modern types of indicators..... V. 310
" " a new form of steam calorimeter..... VII. 178
" " the new calorimeter..... VIII. 235
" " an electric speed recorder..... IX. 377
" " memoranda on the performance of a compound engine IX. 545
" " the effect of circulation in steam boilers, on the quality of steam..... IX. 489
" " disc., boilers for warming dwelling-houses..... VI. 626
" " " data for steam heating..... VI. 858
" " " frictional resistance of engines and shafting... VI. 473
" " " manufacture of cotton-seed oil..... VI. 434
" " " report of committee on steam boiler trials..... VI. 339, 347
" " " shell and water-tube boilers..... VI. 612
" " " technical education..... VI. 544
" " " another new steam engine indicator..... VII. 519
" " " smoke-preventing furnaces..... ..... VII. 796
" " " substitutes for steam ..... VII. 731
" " " friction of non-condensing engines..... VIII. 103
" " " cylinder condensation and the compound engine VIII. 488
" " " duty trials of pumping engines..... IX. 483
" " " economy of high and low-speed engines..... IX. 712

PAGE

BARRUS, G. H., disc., Strong locomotive. ..... IX. 611
BARTOL, B. H., memorial notice of..... IX. 737
Basic process, adaptation of Bessemer plant for, A. L. Holley..... I. 131
Basic Bessemer process, T. Egleston..... VII. 34
BAYLES, J. C., tribute to A. L. Holley..... III. 34
" " disc., crystallization of iron..... VII. 270
Bearings, relations of speed and pressure on (184–2) ..... VI. 849
Bed-plate for vertical engine..... IV. 369
BEEHLER, W. H., disc., coast defense..... VIII. 613
BEGGS, JAS., memorial notice of..... X. 832
Belleville boilers ..... VI. 577
Belt formula, A. F. Nagle ..... II. 91
Belt formula, by Morton..... II. 96
Belt velocity..... II. 94
Belting to connect shafts which are not parallel, J. B. Webb..... IV. 165
Belting rolling mills..... II. 76
Belts, coefficient of friction of..... II. 93
" *experiments on adhesion of*, S. Webber..... II. 224
" strength and tension of..... II. 92
Belting, affected by atmospheric moisture..... VII. 588
Belting, experiments on the transmission of power by, W. Lewis..... VII. 549
" non-elasticity of..... VII. 585
" of rawhide..... VII. 556,586
" speed of ..... VII. 582
" stretch of..... VII. 556
" tightness of..... VII. 147
" *transmission of power by (M. I. T. Exps.)*..... VII. 347
" vertical, tests of..... VII. 556
" centrifugal force of..... VIII. 557
" *comparative value of different kinds of*, S. Webber..... VIII. 529
" manufacture of..... VIII. 555
" flesh and grain side..... VIII. 533, 558
Belt transmission, friction in..... VI. 475
Belts as grain conveyers, T. W. Hugo..... VI. 400
" centrifugal force of..... VI. 477
" slip of..... VI. 477
" rubber, in grain elevators..... VI. 412
" tractive forces of..... X. 765
Belpaire fire box..... IX. 588
Bending rolls for steel..... VI. 112,121
BENNETT, T., on Pemberton mill failure..... II. 271; III. 25
BERGNER, THEODORE, recent improvements in drawing boards..... VI. 224
" " memorial notice of..... VII. 829
Bessemer ingot cranes, G. Curtis..... IV. 238
" *process, adaptation of plant for basic*, A. L. Holley..... I. 131
" " output in..... I. 138
" *plant, at Troy, the original*, R. W. Hunt..... VI. 61
Bessemer's solid fort..... VIII. 611
Best form of nozzles and diverging tubes, A. F. Nagle ..... IX. 505
Beton with iron as a building material, W. E. Ward..... IV. 388

PAGE
Beton and iron for H. R. Tunnel..... IV. 394
" house struck by lightning..... IV. 402
BILLINGS process for steel ingots..... X. 593
BILGRAM, HUGO, disc., friction in gearing..... VIII. 78
" " " centrifugal pumps..... IX. 281
" " " fit of set screws..... IX. 334
" " " friction in toothed gearing..... IX. 215
" " " shaft governor..... IX. 316
BINSSE, HENRY LEON, a short way to keep time and cost..... IX. 380
" " disc., diameters of cone and step pulleys..... X. 297
Binary engine, Du Trembley..... VII. 682
" *absorption system of ice machinery*, H. F. J. Porter..... II. 212
BIRNIE, ROGERS, Jr., disc., coast defense..... VIII. 607
Bishop's sack elevator..... VII. 656
Bismuth for lining cylinders..... VIII. 495
Bisulphide-of-carbon engine..... VII. 684, 717, 718, 729
Bituminous coals, evaporative power of, W. Kent..... IV. 249
Bits of engine-room experience, L. F. Lyne..... X. 696
Blackman fan, experiments with..... VII. 539, 547
Blades for centrifugal pumps..... IX. 242
Blanchard's engine, on S. S. John Faron..... VII. 692
Blast furnace boilers..... VI. 593
Blower, power consumed in driving..... VI. 824
Blowing engine at Wyandotte..... VI. 50
Blowers, experiments and experiences with, H. I. Snell..... IX. 51
" automatic adjustment of..... IX. 68
" profile of blade for..... IX. 69
" repairs of..... IX. 66
Blow in basic Bessemer process..... VII. 55
Blower for smoke-stacks..... VII. 805
" power required to drive..... VII. 823
Blow-holes in steel..... VII. 250
" in castings..... VIII. 254
Blue printing, new method of..... VIII. 722
Blue limestone, as filling for Beton..... IV. 390
Blue prints large and enlarged, R. H. Thurston..... IX. 696
BOGART, J., A. S. C. E., on Test Commission..... V. 12
Boiler and furnace efficiencies..... III. 247
Boiler explosions early in 19th century..... IV. 142
" " causes of..... IV. 143
" " commission on..... II. 59
" for high pressures..... I. 268
" " the "Superior"..... II. 112
" *inspection, protective value of*, F. B. Allen..... IV. 142
" *tests, rules for conducting*, W. Kent..... V. 260
" common marine..... VI. 571
" Cornish..... VI. 569
" drop tubes in..... VI. 570
" field..... VI. 574
" for W. W., Center Square, Philadelphia..... VI. 588, 593

PAGE
Boiler horizontal tubular ..... VI. 569
" horse-power ..... VI. 265, 302
" House of Pacific Mills ..... VI. 687
" Howard ..... VI. 578
" Lancashire ..... VI. 570
" Locomotive ..... VI. 571
" Martin ..... VI. 573
" of Hero of Alexandria ..... VI. 608
" plain cylinder ..... VI. 567
" power, unit of ..... VI. 265
" pressure, limit in ..... VI. 572
" seamless ..... VI. 843
" tests, code of rules for ..... VI. 267
" " *tables for facilitating calculation of*, W. Kent ..... VI. 84
" *tubular, new method of constructing*, F. A. Scheffler ..... VI. 110
" vertical tubular ..... VI. 572
" wagon ..... VI. 588
" Watt's ..... VI. 588
Boilers as magazines of explosive energy, R. H. Thurston ..... VI. 199
Boilers, lifetime or age of, W. B. LeVan ..... II. 503
" long support of ..... IV. 146
" of the "Livadia" ..... IV. 418
" sectional ..... IV. 91
" longitudinal riveted joints of, J. H. Cooper ..... X. 707
" Belleville ..... VI. 577
" brick-setting of ..... VI. 118
" Corliss ..... VI. 612
" Dickerson's ..... VI. 595
" for blast furnace ..... VI. 593
" " warming dwelling houses ..... VI. 619
" of Pacific Mills ..... VI. 684
" " S. S. *Louisiana* ..... VI. 117, 118
" " " *Propontis* ..... VI. 577, 600
" Redfield ..... VI. 117
" report of a committee on a standard method of testing ..... VI. 256
" riveted seams in ..... VI. 120
" sectional ..... VI. 220
" *shell and water-tube*, A. Stirling ..... VI. 566
" strains in ..... VI. 118
" water-tube, advantages of ..... VI. 604, 613
" " " inventors of ..... VI. 601
" " " at sea ..... VI. 116
" " " priming of ..... VI. 578
" weight of ..... VI. 610
" with brick furnaces ..... VI. 117
" rating by horse-power of ..... VII. 214
" strains in locomotive ..... IX. 534
" circulation in ..... IX. 489
" use of kerosene oil in ..... IX. 247
Bond, G. M. standard measurements ..... II. 80

PAGE
BOND, G. M., standard gauge system ..... III. 122
" " " pipe and pipe threads ..... VII. 311
" " disc., arrangement and indexing of drawings ..... II. 378
" " " drop press ..... V. 62
" " " perfect screw problem ..... V. 243
" " " apparatus for testing materials ..... VI. 494
" " " strain in hardened steel ..... VII. 399
" " " substitutes for steel in springs ..... VII. 384
" " " taper for bolts and pins ..... VII. 396
" " " the unexpected which often happens ..... VII. 157
" " " twist drills ..... VII. 136
" " " standard pipe report ..... VIII. 41
" " " working stress of iron ..... VIII. 171
" " " steam and hot water ..... VIII. 528
" " " tubes from solid bars ..... VIII. 568
" " " deep holes in steel ..... VIII. 705
" " " calculating machines ..... VIII. 708
" " " efficiency of a man at a crank ..... VIII. 715
" " " friction in hoisting machinery ..... VIII. 716
" " " strains in boiler stays ..... VIII. 720
" " " inserting and securing crank pins ..... IX. 449
" " " river practice of the West ..... IX. 659
" " " rope transmissions ..... IX. 710
" " " sizes of tap-drills ..... X. 456
" " " phenomena of steel ..... X. 445
BORDEN, T. J., disc., intrinsic value of special tools ..... VIII. 264
" " " capital's need for high-priced labor ..... VIII. 289
" " " a problem in profit sharing and the labor question ..... VIII. 661
" " " a novel chimney staging ..... VII. 615
" " " centrifugal and reciprocating pumps ..... VII. 611
" " " compound engines for manufacturing purposes. X. 77
BOULTON process for steel ingots ..... X. 595
Bort, or black diamond for drilling glass ..... VII. 394
Bottom pouring of castings ..... VI. 107
Bower-Barff process for rustless iron, G. W. Maynard ..... IV. 351
BOYD, JOHN T., disc., number of meetings ..... X. 19
Boyden's turbine tests ..... VIII. 364, 390
Bradley promethor ..... VII. 727
Brain work in machinery ..... VI. 36
Brake straps, lining for ..... IX. 331
Brakes for Meigs Elev. R. R ..... VII. 109
Bramah's lock ..... V. 124
BRASHEAR, J. W., disc., perfect screw ..... V. 257
Brass, deterioration of ..... IX. 429
Brass tube, standards for ..... VIII. 348
Brass, manufacture of ..... V. 148
Brass tubes in reheater of compound engine ..... II. 113
Brasses for rolling mill journals ..... VI. 160
" hollow and water-cooled ..... VI. 850

PAGE
Brasses of R. & P. R. R. ..... VI. 161
Brass in thrust bearing ..... VI. 853
Brayton petroleum engine ..... VII. 701
Breaking block for cranes ..... IV. 244
Brick furnaces in boilers ..... VI. 598
Bridge at Grenoble ..... V. 111
" indicator ..... II. 536
" strains ..... II. 532
" timber, fractures of ..... IV. 132
" vibrations and lurches ..... II. 535
" *structures, a railroad bed for*, O. C. Woolson ..... IX. 276
Bridges, iron, for railroads ..... II. 530
" of long span ..... IV. 78
" steel, for railroads ..... II. 534; IV. 410
" wooden " ..... II. 527
" safety of ..... VIII. 158
" standard sizes for ..... VIII. 683
Brief treatise on the steamboat cam, L. Johnson ..... II. 122
Briggs's standard for pipe threads ..... VII. 812
Briggs's standard for fittings ..... IV. 274
Briggs's scales ..... IV. 277
Briggs's standard ..... VIII. 38
BRIGGS, J. G., disc., driven wells ..... IX. 324
Brine meter ..... X. 806
Brine, specific heat of ..... X. 800
Brotherhood coupling for marine engine shafts ..... VII. 526
Brown gas engine ..... VII. 697
Brown's testing device ..... V. 317
" valve motion ..... V. 46
Brownlee's tubes ..... IX. 570
Brunel's CO_2 engine ..... VII. 686
Buckeye governor ..... IX. 305
Buel, R. H., reports trials of S. S. anthracite ..... VIII. 478
Buffer springs ..... VI. 871
Buildings, weights of ..... VII. 799
Built-up guns ..... VIII. 597, 611
Built-up work in engine construction, H. See ..... III. 195
Burnham turbine wheel test ..... III. 79
Burnishing of copper rolls ..... V. 155
BURNETT, J. H., memorial notice of ..... VI. 872
Bushings of steel ..... X. 454
Bushing of engine cylinder ..... VII. 155
Butterfield, F. E., memorial notice of ..... VII. 827

Calculating machines ..... VIII. 707
Calculation of entrained water in steam ..... VI. 779
Caley, product-of-combustion engine ..... VII. 702
California, handling grain in, J. H. Cooper ..... VII. 650
Calorimeter, a new form of steam ..... VII. 178
Calorimeter, affected by flow of steam ..... VI. 349

PAGE
Calorimeter, affected by temperature of steam pipe..... VI. 348
Calorimeter as pyrometer, J. C. Hoadley..... II. 42
" barrel..... VI. 289
" Barrus..... VI. 296
" coil..... VI. 294
" in boiler tests at Pacific Mills..... VI. 715
" *the new*, G. H. Barrus..... VIII. 235
" *a simple*, C. H. Peabody..... X. 327
Calorimeters, comparison of..... VIII. 243
" errors of..... X. 375
Cam for steamboat, brief treatise on, L. Johnson..... II. 122
Cambering arrangement, Lackawanna I. & C. Co., W. K. Seaman... IV. 106
" machine, advantages of..... IV. 114
Cambering of rails..... VII. 154
Camber in castings..... VI. 667
Cams for valves of engines..... VII. 784
Cams for Western river engines..... IX. 655
CAMPBELL, ANDREW C., a new conicograph..... VIII. 145
" " disc., drawing paper..... VIII. 307
Canal Gas Engine Co..... VII. 698
Canning, E. W. B., on A. L. Holley..... IV. 39
Canvas belt, tests of..... VIII. 542, 544, 548
Capacity of a tubular boiler at various pressures and heights of water line..... VI. 807
Capacity of Strong locomotive..... IX. 564
CAPEN, T. W., disc., cranes..... IV. 308
Capital's need for high priced labor, W. E. Partridge..... VIII. 269
Car axles, steel, John Coffin..... IX. 135
Carbon, in steel..... VIII. 477, 497, IX. 136
Carbon, non-hardening..... IX. 137
Carbon, solid, in flue-gases..... VI. 829
Carbon-bisulphide engine..... VII. 717
Carbonic acid vapor engine..... VII. 686
Carbonic oxide gas for boilers..... I. 275
Carel locomotive..... II. 276
Carett's steam and flue gas engine..... VII. 692
Car heating, a safety system for, H. R. Towne..... IX. 453
Carnot's cycle..... VII. 710
CARPENTER, R. C., disc., smoke-preventing furnaces..... VII. 791
Cars for Meigs Elev. R. R..... VII. 103
Car springs..... V. 189
Car starter, failure of..... VI. 38
Cartridges and burners, alloys of copper for..... III. 93
Cartridges, flow of metals in..... VI. 661
Cartwright ether engine..... VII. 681
Car wheels, rolled cast steel, J. Reese..... II. 293
Casing for oil wells..... VIII. 348
Casting aluminium bronze and other strong metals, Thomas D. West. VIII. 245
Casting flange pipe, new method of, J. E. Sweet..... IV. 237
Casting, sound, T. D. West..... VI. 94

PAGE
Castings, fed and unfed..... VI. 98
" hot-fed *vs.* cold-fed..... VI. 99
" pickling of..... VI. 668
" seasoning of..... VI. 667
" testing machine for..... VI. 101
Castings toughened, or stirling..... IX. 341
Casting, under pressure..... VI. 104
Cast iron fittings, W. J. Baldwin..... IV. 274
" softness of..... IX. 337
" test of the strength of..... X. 167
Cast metal for guns..... VIII. 592
Cataloguing references, best system for (184–5)..... VI. 863
Caulking of boiler joints..... IV. 429
Causes of boiler explosions..... IV. 143
Cecil hydrogen engine..... VII. 695
Cellulose armor for ships..... VIII. 613
Cement, influence of sugar upon, H. de B. Parsons..... IX. 286
Cements, testing of strength of, Jerome Sondericker..... IX. 172
Centennial tests of turbines.....VIII. 368, 370, 417
Center of oscillation..... VIII. 215
Centre Square (Phil.), W. W. Boiler.....VI. 588, 593
Centrifugal force of belts..... VI. 447
Centrifugal force of high-speed..... VII. 581
Centrifugal pumps and their efficiencies, W. O. Webber..... IX. 228
Central support for Corliss engines..... X. 829
Chains, limits of stress in..... VIII. 710
" versus ropes in cranes..... IV. 295
Chambered holes..... X. 463
Change of annual meeting..... IV. 14
Changes of temperature in a Beton house..... IV. 402
Chanute's experiments on load on tires..... VII. 785
Charcoal, combustibility of..... V. 101
Charges of melting cupola..... VI. 106
" for power..... VIII. 621
Check valves in steam pipes..... VI. 580
CHENEY, W. L., a system of worm gearing of diametral pitch..... X. 333
Chernoff's theory of structure of steel..... IX. 148
Chimney Staging, a novel, F. G. Coggin..... VII. 612
Chimneys, table of sizes of, W. Kent..... VI. 81
Chromium in Bessemer metal..... VI. 64
CHRISTIE, JAMES, disc., lubrication..... X. 810
" " " electro motors for shops..... X. 223
" " " case-hardening of steel..... X. 823
Chronograph for engineering purposes, W. R. Eckart..... III. 184
" on Lowell pumping engine..... III. 191
Chronoscope..... III. 186
Chucks for twist drills..... VII. 136
CHURCH, W. L., disc., descending smoke flues..... VII. 388
" " " expansion in single and compound engines.... I. 179
" " " friction as a factor..... I. 154

PAGE
CHURCH, W. L., disc., non-conducting cylinder linings..... VII. 379
Circulars on commission to test iron and steel..... IV. 31
Circulation in steam boilers..... IX. 489
Clamond light ..... VIII. 668
Clapp-Griffith steel..... VI. 69
Clark's rule for counterbalancing of engines..... II. 273
CLAUSIUS, R. J. E., memorial notice of..... X. 842
Cleaning of tubular boilers..... VI. 581
Clearance in engine brasses..... VI. 854
Clearances in compound engine..... I. 173
Cleaves, E. C., method for blue printing. ..... IX. 696
CLEMENTS, W. L., steam excavators..... IX. 515
Climate conditions for harvesting grain..... VII. 666
CLOUD, J. W., helical springs..... V. 173
Cloud engine..... VII. 690
Clutch couplings, mechanism for manœuvring, W. F. Durfee..... IV. 311
Coagulant in water purification..... VII. 624
Coal beds of Pennsylvania classified..... IV. 217
" *bituminous, evaporative power of*, W. Kent..... IV. 249
" per H. P. in locomotives..... II. 278, 280
" *new method of stocking*, J. M. Dodge ..... IX. 270
" unconsumed in boiler tests..... VI. 341
" used by Strong engine..... IX. 608
" consumption per horse power..... X. 50
Coast defense and mechanical problems, Joseph Morgan, jr..... VIII. 582
COBB, E. S., disc., a plea for the printing press in engineering schools..... IX. 409
" " " electro-plating of steel ..... IX. 716
" " " performance of a compound engine..... IX. 549
" " " punched and sheared edges of steel..... IX. 732
Code of rules of boiler tests..... VI. 267
Co-efficient of friction for belts on pulleys..... VII. 349
Co-efficient of friction..... VI. 141
Co-efficients of friction at 100°..... I. 88
COFFIN, JOHN, steel car axles..... IX. 185
" " disc., power press problems..... IX. 167
" " " standard section lining..... IX. 119
Coffin's averaging instrument, J. E. Sweet..... II. 335
COGGIN, F. G., a novel chimney staging..... VII. 612
" notes on the steam stamp..... VI. 370
Cohesion of fractured steel..... IX. 155
Coke consumption in cupolas..... IX. 502
Cold rolling, effect of..... II. 417
COLE, J. W., disc., estimates for steam users..... V. 298
" " " fire boats..... VIII. 190
" " " intrinsic value of special tools..... VIII. 267
" " " feed apparatus for boilers..... VIII. 298
" " " foundations on yielding earth..... VII. 808
" " " smoke-preventing furnaces..... VII. 789
" " " true crank shafts and bearings. ..... VII. 524

PAGE
COLE, J. W., disc., tempering of steel ..... IX. 724
Col. Laidley's communication ..... IV. 20
Colliery hoisting engines ..... IV. 218
" pumps ..... IV. 220
COLLINS, C. C., a new method for inserting and securing crank pins. IX. 446
" " balanced valves ..... IV. 268
" " disc., cranes ..... IV. 307
" " turbine tests ..... VIII. 392
Colloid structure of iron ..... VII. 243
Combined carbon in steel ..... VII. 251
Combustibility of mill floors ..... II. 497
Combustion chamber ..... I. 274
Combustion in brick furnaces ..... VI. 567
" of fuel in steam boilers ..... VI. 833
" of water gas ..... VIII. 226
COMLY, G. N., economy in lubrication of machinery ..... IV. 315
" " disc., balanced vertical engines ..... IV. 384
Commission to test explosion of boilers ..... II. 59
" of 1868 to test iron for U. S. Forts ..... III. 87
" *to test iron and steel, and other materials,* T. Egleston. III. 80
Committee, local, New York, 1882 ..... IV. 1
" " Cleveland, 1883 ..... IV. 193
" " New York, 1883 ..... V. 3
" " Pittsburgh, 1884 ..... V. 159
" " on experiments on steam boilers ..... III. 7
" " " gauges and standards, report of ..... IV. 21
" " " Holley memorial report ..... V. 15
" " " horse-power of boilers ..... III. 20
" " " invitation of foreign members ..... III. 6; V. 17
" on joint library of engineering societies ..... VI. 359
" " memorial to Patent Office ..... VI. 18
" " National Bureau of Information and Standards ..... III. 19
" " nominations, 1880 ..... I. 3
" " " 1883 ..... IV. 199
" " " 1884 ..... V. 162
" " " 1885 ..... VI. 366
" " " 1886 ..... VII. 405
" " " 1887 ..... VIII. 352
" " permanent location ..... III. 6
" " rules, 1880 ..... I. 4
" " revision of rules ..... IV. 15, 199; V. 164
" " rules for conducting boiler tests ..... V. 170
" " standard gauges ..... III. 14
" " standard method of testing materials ..... VI. 16, 359
" " standard pipe and pipe threads ..... VII. 20, 414
" " standards ..... X. 479, 575
" " test commission, report of ..... IV. 29; V. 9
" " tests of iron and steel ..... III. 6
" " uniform methods of test ..... VII. 21, 413; VIII. 17, 346
" " U. S. Test Commission ..... VII. 21, 413

PAGE
Committee, standing, appointed 1880 ..... I. 6
" to secure reports from U. S. Government ..... VII. 410
Common sense in engineering ..... VI. 543
Communication from Col. Laidley ..... IV. 20
" on uniform standards for test specimens ..... V. 164
Comparator, Pratt & Whitney Co ..... II. 80; III. 122
Comparison between different types of engines, C. A. Hague ..... II. 287
" of standard inches ..... III. 125
" " *three modern types of indicators*, G. H. Barrus ..... V. 310
" " Johnson's and Meigs' results ..... IV. 250
" " vertical and horizontal engines ..... IV. 385
Comparative values of metal surfaces for warming air, W. J. Baldwin VII. 361
Comparative value of steam and hot water for transmitting heat and power, C. E. Emery ..... VIII. 512
Comparative cost of steam and water power, C. H. Manning ..... X. 499
Compound engine. *See* also engine, compound.
Compound engine, economy of ..... IX. 548
" *engine, memoranda on the performance of a* ..... IX. 545
" engines on Western rivers ..... IX. 654
" engine in grain elevators ..... VI. 408, 410
" engine, development of ..... VIII. 472
" engine to reduce cylinder condensation ..... VIII. 479
" engines, economy and cost of ..... I. 187
" " clearances in ..... I. 173
" " uniform rotation in ..... I. 174
" " uniform propulsive energy of ..... I. 180
" " coal per h. p. in ..... I. 188
" " propeller ..... IV. 213
" " cost of ..... I. 182
" engine, brass tubes for reheater ..... II. 113
" " high ratios of expansion in ..... I. 55
" " governor in ..... I. 179
" " and single, economy of ..... I. 22
" " receiver of ..... I. 178
" " wire-drawing in ..... I. 174
" " pumping at Toronto ..... I. 179
" *engines for manufacturing purposes*, C. T. Main ..... X. 48
" " for manufacturing purposes, dimensions of ..... X. 61
Compounding non-condensing engines ..... VIII. 486
Compress, cotton, failure of ..... III. 106
Compress air by windmills ..... III. 306
" steel ..... IV. 79
Compressed air for transmitting power ..... VIII. 570
Compression in high speed engine ..... VIII. 202
Compression as a method of governing, H. Tabor ..... V. 48
" in steam cylinder ..... II. 341
Compression, effect of, on friction of valve ..... VII. 643
" engine ..... VII. 708
Compression in Strong locomotive ..... IX. 562
Computed specific heat of platinum ..... III. 181

PAGE
Condensation in cylinder as affected by speed of revolution..... VII. 379
" " exhaust-pipes..... VII. 816
" " long steam pipes..... V. 106
" " non-conducting cylinder..... XII. 375
" " steam jackets..... I. 172
" " " stamp..... VI. 397
" " vapor engines .....VII. 724, 740
Condenser, portable, for testing small engines..... VII. 380
Condensers, surface, J. M. Whitham..... IX. 417
Condensing engine, cost of..... II. 286
" " friction in..... VII. 108
Conditions of equal work in Worthington engines..... III. 151
Conductivity of cast iron..... VIII. 493
" " metals..... VIII. 495
" " metals for heat..... IX. 419
Cone pulleys, diameters of..... X. 269
Connecting rods, W. F. Mattes..... IX. 466
Consumption of steam at various speeds..... X. 722
Contamination of driven wells..... IX. 329
Conicograph, a new, A. C. Campbell..... VIII. 145
Constitution of U. S. Commission for testing materials..... III. 99
Construction of an efficiency diagram..... III. 271
" " mill floors..... II. 491
Continuous rod mill of Trenton Iron Co., W. Hewitt..... II. 70
" lubrication with grease..... IV. 316
" analysis of flue-gases..... VI. 786
Contract systems in repair shops..... VIII. 653
Contract work in shops..... VIII. 290
Contraction and expansion of drawing paper..... VIII. 301
Contraction of chilled castings..... VIII. 243
Contraction of cores in moulds..... VII. 426
Convection of air..... I. 38
Converter in basic Bessemer process..... VII. 37
Converting vessel at Wyandotte..... VI. 44
" " " " stationary..... VI. 49
Conveyors for coal..... IX. 270
Conway bridge, stresses in..... VIII. 180
COON, J. S., trial of upright boiler and engine at Roxbury pumping station..... III. 290
" " duty trials of pumping engines..... IX. 476
" " disc., circulation in steam boilers..... IX. 492
" " " performance of a compound engine..... IX. 548
" " " punched and sheared edges of steel..... IX. 783
" " " Strong locomotive..... IX. 630
" " " surface condensers..... IX. 430
COOPER, J. H., handling grain in California..... VII. 650
" " on the longitudinal riveted joints of steam-boiler shells X. 707
" " disc., fit of set screws..... IX. 333
" " " kerosene oil in steam boilers..... IX. 254
" " " lining for brake straps..... IX. 332

PAGE
COOPER, J. H., disc., punched and sheared edges of steel..... IX. 780
" " " rope transmissions..... IX. 703
" " " standard section lining..... IX. 117
" " " tractive forces of leather belts..... X. 769
" " " lubrication..... X. 813
" " " bits of engine-room experience..... X. 706
Cooper, Thomas, platinum lamp..... VIII. 671
Co-operation of labor..... VIII. 647
Copper-tin-zinc alloys..... VIII. 336
Copper castings, flux for..... IV. 152
" " color of..... V. 154
Copper scale to oxidize CO gas..... VI. 791
Copper tubes for condensers..... IX. 429
Cord tensions in indicator drums..... VII. 502
Cored brasses for journals..... VI. 850
" flanges for cast pipe..... IV. 237
Corliss boilers..... VI. 612
Corliss engine, alteration of cross-head of, C. E. Emery..... II. 40
" " for roll train..... II. 71
" " high speed of..... II. 74
" " Pawtucket..... I. 172
Corliss pump-valve springs..... IV. 349
Cornish pumps in anthracite mines..... IV. 221
" *or double-beat pump valves*, A. F. Nagle..... X. 521
Corrosion by electro-plating solutions..... IX. 719
" " sugar vapor..... IX. 429
" in fire boxes..... IX. 536
" of gauge glasses..... IX. 250
" " aluminium bronze..... VIII. 335
" " boilers..... VI. 119
" " iron by caustic lime..... III. 231
" " " " mortar..... III. 231
" " pine plank by oak..... VI. 590
" " pumps in mine water..... IV. 221, VI. 632
Corrugated boiler furnaces..... VIII. 498
Coryell's Little Giant boilers..... VI. 596
Cost and time, a short way to keep, H. L. Binsse..... IX. 380
Cost, factor..... VII. 456
" of aluminium bronze..... VIII. 256
" " basic steel..... VII. 73
" " beton construction..... IV. 388
" " compound engine..... I. 182
" " condensing engine..... II. 286
" " engine as affecting expansion..... III. 282
Cost of frictional resistances of engine and shafting in mills, J. T. Henthorn..... VI. 461
Cost of foundry work, estimating the, G. L. Fowler..... IX. 390
" " labor in contract and piece-work..... VII. 432
" " lubricant..... I. 117
" " lubrication by grease and oil..... IV. 318

PAGE
Cost of pumping hot water ..... VIII. 522
" " product.....VII. 452, 483
" " smoke-preventing furnace..... VII. 789
Cost of steam and power, H. R. Towne..... VIII. 617
" " horse-power per annum..... X. 55
" " steam excavator..... IX. 532
" " ventilation..... VII. 544
" " water-gas..... VII. 672
Cost of power in non-condensing steam-engines, C. E. Emery..... X. 233
" " water-power plant..... X. 501
" " water-horse power..... X. 500
Cost of steam and water-power, comparative, C. H. Manning..... X. 499
Cotton-leather belts, tests of ..... VIII. 549
Cotton-seed cake, analysis of..... VI. 425
" meal..... VI. 422
" " spec. heat of..... VI. 429
" hulls as fuel ..... VI. 431
" oil, consumption of..... VI. 415
" " extracted by leaching..... VI. 436
" " machinery for .....VI. 418, 435
" " " speed and power of..... VI. 431
" " " manufacture of ..... VI. 414
" " mills, insurance of..... VI. 436
" " production of..... VI. 414
" " yield of..... VI. 433
COTTER, J., disc., expansion in single and compound engine..... I. 181
" " friction of oils..... I. 113
" " screw propulsion..... II. 468
" " age of steam boilers..... II. 521
COUCH, A. B., disc., adoption of code for boiler trials..... VI. 882
" " " belts as grain conveyers..... VI. 412
" " " conicograph..... VIII. 155
" " " drop press..... V. 61
" " " memorial notice of..... X. 832
" " " flow of metals..... VI. 667
" " " power for machine tools..... VIII. 810
" " " steam stamps..... VI. 896
" " " technical education..... VI. 534
" " " working pressure of gear teeth..... VIII. 699
Council, report of, XIVth meeting..... VIII. 6
" " " XVth " ..... VIII. 349
" " " ..... X. 6
Counterbalancing of engines, S. W. Robinson..... II. 248
" " locomotives in France..... II. 276
" " " on P. R. R..... II. 274
" " saw-mills..... II. 269
" " vertical engines..... II. 272
" " a locomotive..... X. 302
Counterbore in cylinders..... X. 698
Countershafts, uniform speed for..... VII. 146

PAGE
Counter-weighting by steam..... IX. 167
Coupling, flexible, for engine shaft..... VII. 523
" for Meigs Elev. R. R..... VII. 109
" " pipe threads..... VII. 321
" " Edison-Porter dynamo..... III. 221
Courses in mech. eng'g at the Mass. Inst. Tech., G. Lanza..... VII. 338
COWLES, WM., improvement in ferry-boats..... VII. 190
" " fire-boats..... VIII. 182
COXE, E. B., at Holley memorial session..... III. 49
Cracking of steel..... VI. 844
" " ..... X. 434
Craddock on vapor engine..... VII. 686
CRANE, T. S., the purification of water for mfg. and domestic purposes..... VII. 617
" " direct acting steam veneer cutters..... VIII. 426
" " disc., substitutes for steam..... VII. 717
" " " the piping of steel ingots..... X. 592
" " " strength of shafting..... VIII. 140
" " " power for machine tools..... VIII. 309
" " " flying rope..... VIII. 315
" " " engineering problems for senior students..... VIII. 330
" " " tubes from solid bars..... VIII. 568
" " " the needs of our navy..... VIII. 577
" " " experiments with blowers..... IX. 70
" " " power-press problems..... IX. 167
" " " phenomena of steel..... X.
" " " worm-gearing of diametral pitch..... X. 336
" " " friction of piston packing rings..... X. 397
CRANE, W. E., disc., variable load, engine speed and internal friction X. 183
" " " phenomena of steel..... X. 437
Crane, a power, W. F. Durfee..... V. 131
" for roll trains..... IV. 310
Cranes; a study of types and details, H. R. Towne..... IV. 288
" classified..... IV. 289
Crank, efficiency of the, S. W. Robinson..... I. 222
" " " ..... VIII. 112
" overhanging..... I. 153
Crank-pin, pressures allowable on..... VI. 856
" poor forging of..... VI. 855
" friction at..... I. 153, 237
" pressures on..... I. 177
" *of S. S. Knickerbocker*, L. Johnson..... I. 69
Crank-pins, a new method for inserting and securing, C. C. Collins.... IX. 446
Crank-shaft, new method of constructing a, J. E. Sweet..... IV. 231
Crank-shafts and bearings, the production of true, Horace See..... VII. 521
" milling machine for..... IX. 267
CREELMAN, W. J., disc., bits of engine-room experience..... X. 704
Critical temperature of metals..... VI. 4
" " for cutting nails..... VI. 664
Cromwell's method for cone pulleys..... X. 282

PAGE
Cross-adjustment of pressure-plate of valves..... IV. 273
Cross-head of vertical engine..... IV. 373
Cross-ruled drawing paper ..... VIII. 302
Crook's radiometer..... VII. 154
CROUTHERS, J. A , disc., crystallization of iron ..... VII. 268
Cruisers for the navy ..... VIII. 579
Crude petroleum in steam boilers ..... X. 761
Crystalline structure of steel ingot..... VI. 665
Crystallization of iron..... IX. 538
" *of wrought iron*, Wm. Hill..... VII. 243
Culm-burning at Scranton..... VII. 391
Cup leather packing ..... VII. 383
Cupola experience, a foundry, F. A. Scheffler..... IX. 496 ; X. 89
Cupola process for soft castings ..... IX. 338
CURTIS, G., remarks on Bessemer ingot cranes..... IV. 289
Curve of efficiency for real engines ..... III. 266
" " specific heat of platinum ..... III. 176
Curves of capacity and economy in steam boilers..... VI. 328
" " water consumption in the Novelty Iron Works..... X. 234
Cushion adjustment in engines, S. W. Robinson ..... I. 255
Cut-off, adjustable, for marine engines, H. S. Hayward ..... IV. 136
Cut-off: best for different pressures ..... IV. 89
" in compound engine..... IX. 549
" most economical point of..... VIII. 486
Cut-off valves, motion curves of, A. W. Robinson..... V. 84
Cutting of contact surfaces..... VII. 281, 286
Cylinder condensation ..... I. 184; IV. 88
" " at different piston speeds ..... III. 215
" " in steam engines..... VII. 375
" " " vapor " ..... VII. 724, 740
Cylinder condensation, reduction of, by compound engine, C. E. Emery VIII. 479
Cylinder condensation varies expansion ..... III. 286
Cylinder of S. S. *Rip Van Winkle*, wear of..... IX. 96
Cylinders, proportioning of, R. H. Thurston..... IX. 360
Cylinders, unequal wear of..... IX. 94
" " lubrication of..... IX. 95
Cylinder diameters of marine engines ..... X. 580
" lubrication..... X. 817
Cylinder ratios of triple-expansion engines, J. M. Whitham..... X. 576

Dampness of a beton-house..... IV. 403
Dash-pot for drop cut-off..... IV. 139
" " clutches..... IX. 171
" " governors ..... IX. 304
" " for steam stamp ..... VI. 335
Data for steam heating..... VI. 857
DAVIDSON'S viscosimeter..... IX. 371
DAVIS, E. F. C., photographs of mine interiors..... VI. 26
" " disc., novel hammer-head..... VI. 80

PAGE
DAVIS, E. F. C., disc., oxidation of metals ..... VI. 633
" " " speed of gears ..... VI. 863
" " " systems of catalogues and indexes ..... VI. 864
" " " tubular boilers ..... VI. 118
" " " divergencies in flange diameters ..... IX. 132
" " " shaft governors ..... IX. 318
" " " soft castings ..... IX. 3:8
" " " stocking and reloading coal ..... IX. 273
" " " wrought iron scrap in castings ..... IX. 341
" " " tractive forces of leather belts ..... X. 773
" " " temperature effect on the strength of iron and steel ..... X. 718
" " " gain-sharing ..... X. 622
" " " bits of engine room experience ..... X. 706
" " " lubrication ..... X. 814
Davis' piston valve ..... IV. 268
Day, W. A., engine tests ..... VIII. 92
Dead plate for smoke prevention ..... VII. 731
Dean Bros. valve dynamometer ..... VII. 631
DEAN, F. W., the distribution of steam in the Strong locomotive IX. 556, and X. 687
" " disc., culm-burning ..... VII. 392
" " " phenomena of steel ..... X. 438
Decomposition of silicates by heat ..... III. 232
" " glass by moisture ..... III. 32
" " slags by organic acids ..... III. 235
Defective welds in iron ..... III. 90
Defects of indicator diagrams ..... I. 189; IV. 183
" in steel plate ..... IV. 418
Degree of D. E. conferred on E. D. Leavitt, Jr. ..... IV. 204
Delaporte ammonia engine ..... VII. 688
DELAMATER, CORNELIUS H., memorial notice of ..... X. 836
DEMPSTER, ——, disc., natural gas ..... V. 375
DENT, E. L., disc., automatic regulator for heating apparatus ..... IX. 438
DENTON, J. E., most economical point of cut-off in steam engine .... II. 147, 281
" " the mechanical significance of viscosity determinations of lubricants ..... IX. 369
" " performance of a 35-ton refrigerating machine of the ammonia absorption type ..... X. 792
" " on the friction of piston-packing rings in steam cylinders ..... X. 392
" " on the identification of dry steam ..... X. 349
" " steam consumption of engines at various speeds ..... X. 722
" " disc., a railroad bed for bridge structures ..... IX. 284
" " " centrifugal pumps ..... IX. 243
" " " experiments with blowers ..... IX. 65
" " " friction in toothed gearing ..... IX. 222
" " " friction of engines ..... IX. 84
" " " kerosene oil in steam boilers ..... IX. 255
" " " screw propulsion ..... II 465

PAGE
DENTON, J. E., disc., shaft governors ..... IX. 313
" " " standard section lining ..... IX. 121
" " " steam and power costs ..... VIII. 626
" " " steel car axles ..... IX. 149
" " " the influence of sugar upon cement ..... IX. 291
" " " the milling machine as a substitute for the planer ..... IX. 265
" " " testing the strength of cements ..... IX. 181
" " " some properties of ammonia ..... X. 646
" " " the president's address ..... X. 498
" " " tractive forces of leather belts ..... X. 771
" " " cylinder ratios of triple-expansion engines ..... X. 584
" " " the steam turbine ..... X. 681
" " " reducing section of bolts ..... X. 819
" " " compound engines for manufacturing purposes X. 75
" " " some properties of vapor and vapor engines ... X. 657
" " " cost of power in steam engines ..... X. 255
" " " diameters of cone and step pulleys ..... X. 297
" " " variable load, speed and engine friction ..... X. 172
" " " loss by friction in a transmitting dynamometer X. 518
" " " grease for lubrication ..... X. 811
" " " tests of strength of cast iron ..... X. 232
" " " a simple calorimeter ..... X. 331
" " " joints of boiler shells ..... X. 717
" " " mechanics of the injector ..... X. 341
" " " cost of steam and water power ..... X. 506
" " " expansion of timber, due to water ..... X. 541
" " " gain-sharing ..... X. 615
" " " flow of steam in a tube ..... X. 321
Dephosphorizing by fluorine ..... I. 137
" " natural gas ..... V. 365
Depreciation of machinery plant ..... VII. 434
DeRivaz gas engine ..... VII. 695
DeRochas four-cycle engine ..... VII. 700
Descending smoke-flues ..... VII. 387
Description of Edison-Porter steam dynamo, T. A. Edison, C. T. Porter III. 218
Designing, intuition in ..... VIII. 458
Detent for drum-spring in indicator ..... VII. 498
Determination of costs of steam and power, H. R. Towne ..... VIII. 617
Determination of heating surface in ventilating flues, W. P. Trowbridge III. 69
Device for friction of valves ..... IV. 154
" to illustrate torsion of springs ..... IV. 338
Diagram of friction of lubricating oils ..... I. 76, 77
" " " of oil at different pressures ..... I. 82
" " power for spinning frame ..... I. 84
Diagram of study at Worcester ..... VI. 519, 524
Diagrams of specific heat ..... II. 51, 52
Diameters of cone and step pulleys, C. A. Smith ..... X. 269
Diametral pitch in worm-gearing ..... X. 333
Dickerson boilers ..... VI. 595

PAGE
Die, a novel hammer-head and, Wm. Hewitt..... VI. 77
Differential manometer..... II. 98
DINGEE, W. W., disc., estimating the cost of foundry work..... IX. 395
" " " rope transmissions..... IX. 707
" " " repeated bending of steel..... IX. 727
" " " working pressure of gear teeth..... VIII. 702
" " " phenomena of steel..... X. 435
Direct acting steam veneer cutters, Thos. S. Crane..... VIII. 426
Discharge area, effect of..... VII. 824
Discussions, rules for regulating.....VII. 408, 419
Discussion of the adoption by the Society of the report of the committee on boiler trials..... VI. 877
Discussion of the report and code for a standard method for conducting boiler trials..... VI. 314
Discussion of indicator cards of Worthington engine..... III. 135
Disengagement area in boilers..... I. 270
Displacement and area curves of fish, H. de B. Parsons..... IX. 679
Dissociation of gases..... II. 54
Distortion of castings in Bower-Barff process..... IV. 358
Distribution of steam by link motion..... IX. 638
Distribution of steam in the Strong locomotive, F. W. Dean.....IX. 556 ; X. 687
Distribution of internal friction in engines, R. H. Thurston..... X. 110
Divergencies in flange diameters of pumps, valves, etc., P. A. Sanguinetti..... IX. 124
Diverging tubes and nozzles, best form of, A. F. Nagle..... IX. 505
Divine, James, on rope transmissions..... IX. 704
Dixwell experiments..... VIII. 489
DOANE, W. H., disc., experiments on belting..... VII. 587
" " " a problem in profit sharing..... VIII. 647
" " " fit of set screws..... IX. 334
" " " power for machine tools..... VIII. 311
" " " sand-blast process..... VIII. 326
" " " shop-order system of accounts..... VII. 484
" " " standard pipe report..... VIII. 44
DODGE, JAMES M., a new method of stocking and reloading coal..... IX. 270
" " disc., belts as grain conveyers..... VI. 412
" " " flow of metals..... VI. 661
" " " technical education..... VI. 543
" " " casting of aluminium bronze..... VIII. 251
" " " annealing furnaces for castings..... VIII. 296
" " " grinding-room grit..... VIII. 299
" " " training of dynamic engineer..... VII. 773
DOLBEAR'S tests..... X. 107
Dome-head drawn under pressure..... VI. 669
Dome openings in boiler shells.....IV. 146, 149
Domestic filtration of water..... VII. 628
DORAN, W. S., disc., lubrication..... X. 817
" " " cylinder ratios of triple-expansion engines.... X. 584
Double engines for collieries..... IV. 230
Double-screw for ferry-boats..... VII. 195

PAGE
Dow's stores..... VI. 412
Draft-gauges..... VI. 286
Draft of pumps for driven wells..... IX. 327
Draft tubes and diffusers for turbines..... VIII. 374
Drainage pumps for Haarlem lake..... VII. 606
Drake gas engine..... VII. 699
Draw-filing of journals..... VI. 850
Drawing boards, recent improvements in, Theo. Bergner..... VI. 224
Drawing in schools..... VIII. 694
Drawing of metals..... VI. 670
Drawing office system, a, H. R. Towne..... V. 193
Drawing-paper, contraction and expansion of..... VIII. 301
Drawings, a new method of keeping mechanical, C. T. Porter..... II. 560
DREDGE, JAMES, gas lighting by incandescence..... VIII. 663
Dredges, performance of..... VIII. 123
" types of..... VIII. 123
Dredging machinery, recent improvements in..... VIII. 114
Drifting in iron boiler work..... IV. 145
" " steel work..... IV. 418
Drill, a new rock, F. A. Halsey..... VI. 71
Drill driven by electromotor..... X. 824
Drilling, power for..... VIII. 310
Driven wells..... IX. 324
" " in clay..... IX. 328
Drop press, pressure obtainable by use of, R. H. Thurston..... V. 53
Drop presses, efficiency of..... V. 54
" " heavy versus light..... V. 59
Drop test for car axles..... X. 150
Drums for cranes..... IV. 298
" " colliery hoisting engines..... IV. 220
Drying of paper pulp by hot water..... VIII. 528
Dryness of steam, effect of flow on..... VI. 349
" " " length of pipe on..... VI. 348
" " " pressure on..... VI. 348
Dryness of steam in Worthington engines..... III. 154
Dry steam, identification of, J. E. Denton..... X. 349
Ductility decreased by strain..... VIII. 174
Ductility of gun metal..... VIII. 591
DUDLEY, C. B., disc., rolled steel car wheels..... II. 298
Dues, annual, increase of..... V. 17
Dues, from members..... IV. 8
DU FAUR, A. F., expansion of steam and water without transfer of heat..... III. 208
" " disc., expansion in single and compound engines.. I. 178
" " " methods for economy of fuel in steam engines..... I. 274
Dumper in grain elevator..... VI. 403
DURFEE, W. F., mechanism for manœuvring clutch couplings..... IV. 311
" " balanced vertical engines..... IV. 368
" " a power crane..... V. 131

PAGE

DURFEE, W. F., experimental steel works at Wyandotte ..... VI. 40
" " disc., adoption of code for boiler trials..... VI. 880
" " " a novel chimney staging ..... VII. 616
" " " annular jet for ejector..... VII. 804
" " " basic Bessemer process..... VII. 78
" " " cambering arrangements..... IV. 115
" " " cranes..... IV. 310
" " " condensation in exhaust-pipes..... VII. 820
" " " crystallization of wrought-iron..... VII. 254 to 270
" " " culm-burning ..... VII. 390
" " " data for steam-heating..... VI. 859
" " " descending smoke-flues ... . VII. 387
" " " drilling holes in glass ..... VII. 393
" " " economical point of cut-off..... .....II. 195, 199
" " " engineer as an economist ..... VII. 476
" " " flow of metals..... ....VI. 659-664
" " " flying rope..... VIII. 322
" " " foundations on yielding earth ..... VII. 802
" " " mechanical circulation in boilers..... VII. 815
" " " Meigs Elevated R. R ..... VII. 121
" " " natural gas..... V. 367
" " " non-conductors of heat..... ..... II. 36
" " " packing for pneumatic engine..... VII. 382
" " " perfect screw ..... V. 256
" " " pressures and speeds of journals.....VI. 850-855
" " " properties of metals and alloys..... ..... V. 147
" " " rolled steel car-wheels..... II. 298
" " " shell and water-tube boilers.....VI. 586, 607
" " " smoke-preventing furnaces..... VII. 791
" " " sound casting.....VI. 104, 105, 108
" " " strain in hardened steel..... VII. 398
" " " substitutes for steam.... ..... VII. 729
" " " testing small engines..... VII. 381
" " " the unexpected which often happens..... VII. 160
" " " training of a dynamic engineer..... VII. 776
" " " the milling machine as a substitute for the planer .... IX. 267
" " " water purification ..... VII. 629
" " " number of meetings..... X. 22
" " " friction of piston-packing rings..... X. 397
" " " a foundry cupola experience ..... X. 92
" " " compound engines for manufacturing purposes..... X. 76
" " " the identification of dry steam..... X. 381
Durfee's non-conducting covering..... ..... II. 37
Du Trembley ether engine .... VII. 682
DUTTON, C. S., disc., chains for cranes..... VIII. 710
" " " different kinds of belting..... VIII. 551
" " " bits of engine-room experience..... X. 705
" " " steam consumption of engines..... X. 759

PAGE

DUTTON, C. S., disc., tractive forces of leather belts..... X. 772
" " " reducing section of bolts..... X. 820
" " " central support for Corliss engines..... X. 830
Duty trials of pumping engines, J. S. Coon..... IX. 476
Dynamic engineer, training of..... VII. 742
Dynamic *vs.* mechanical engineer.....VII. 765, 768
Dynamometer for tests of belting..... VII. 550
" " " gearing..... VII. 274
" " valve stems..... VII. 631
" floating..... IX. 214
" governor..... IX. 303
" *improved form of balanced*, S. S. & W. O. Webber... IV. 227
" Webber's..... VIII. 532
" calibration of..... X. 118
" transmitting, friction in..... X. 514
" attachment of..... X. 143
" principle of the Morin..... X. 116

Early colliery engines..... IV. 218
" *experiments involving the flow of metals*, W. E. Ward..... VI. 655
" propeller engines..... IV. 212
Ebullition in steam boilers..... IX. 492
" of greasy water..... IX. 255
Eccentricity of piston-packing rings..... VIII. 439
ECKART, W. R., chronograph for engineering purposes..... III. 184
Ecole centrale..... VI. 526
Economic section of the A. S. M. E..... VII. 430
Economizer, Green's..... VI. 677
Economical method of heating and ventilating an office and warehouse building, H. I. Snell..... IX. 99
Economical point of cut-off in steam engines, A. R. Wolff, J. E. Denton.. II. 147, 281
Economy at different pressures of steam..... IV. 89
" *by subdivision in operating machinery*, J. L. Hornig..... IV. 233
" *in lubrication of machinery, methods of*, G. N. Comly..... IV. 315
" from high pressure..... VIII. 433
" *of fuel in steam engines, methods for*, A. Stirling..... I. 265
" " " single engine..... I. 22
" " low speed in engines..... I. 22
" " high and low-speed engines..... IX. 712
" " locomotives..... IX. 613
" " pumping apparatus..... VIII. 299
" " triple expansion engines..... VIII. 496
" " smoke-preventing furnace..... VII. 789
" " *single acting expansion engines*, W. P. Trowbridge ..... III. 236
" " *the windmill as a prime mover*, A. R. Wolff..... III. 299
" " variable cut-off..... IV. 136
" " *ventilation by heated chimneys and by fans*, W. P. Trowbridge..... VII. 531
" " various vapors in engines..... X. 663
Edison armature..... III. 219

PAGE

Edison-Porter steam dynamo, C. T. Porter..... III. 218
Edison's quadruplex telegraphy..... IV. 330
Education of intuition in machine designing, John T. Hawkins..... VIII. 458
Education, primary requirements of..... VIII. 688
" progress in..... II. 440
Effect of circulation in steam boilers on the quality of steam, G. H. Barrus..... IX. 489
Effect of electro-plating on steel..... IX. 715
" conducting pipe on dryness of steam..... VI. 348
" density on corrosion..... VI. 635
" small orifices..... VI. 349
" heat on cast-iron..... VII. 152
" temperature on iron castings..... VII. 425
" throttling turbines by edged gate..... III. 78
" *prolonged stress on iron*, R. H. Thurston..... IV. 224
" sulphur on rustless iron..... IV. 363
Efficiencies of toothed gear..... VII. 297
Efficiencies, the several, of the steam engine, R. H. Thurston..... III. 245
" *of centrifugal pumps*, W. O. Webber..... IX. 228
Efficiency of a train of gears..... IX. 208
" " a man at a crank..... VIII. 714
" " capital..... III. 253
" " *centrifugal and reciprocating pumps*, W. O. Webber..... VII. 598
" " disk fan..... VII. 547
" " non-conducting coverings of steam pipes..... VI. 191–198
" " non-conductors of heat..... II. 35
" " perfect ideal steam engine..... III. 257
" " steam excavator..... IX. 530
" " steam jacket..... I. 175, 190
" " *the crank*, S. W. Robinson..... I. 221
" " the drop press..... V. 54
" " the steam engine..... IV. 89
" " *turbines as affected by form of gate*, S. Webber..... III. 78
EGLESTON, T., appointment of U. S. Commission to test materials..... III. 80
" machine for testing physical properties of metals and alloys..... V. 140
" critical temperature of metals..... VI. 4
" the basic Bessemer process..... VII. 34
" disc., crystallization of iron..... VII. 249
" " regenerating metallurgic furnaces..... I. 62
" " standard screw threads..... I. 129
" " methods for economy of fuel..... I. 273
" " non-conductors of heat..... II. 39
" " standard gauge system..... III. 129
" " mineral wool..... III. 233
" " spruce beams..... IV. 133
" " non-conducting coverings..... V. 111
Ejector, annular jet for..... VII. 804
" for supplying natural gas..... V. 369
Elasticity of long pump rods..... III. 187

PAGE
Elastic cord for indicator drums..... VII. 499
Elastic curves for R. R..... VIII. 156
Electric contact for measurements..... VI. 494
" railroads..... IV. 86
" storage by windmills.....III. 302, 307
" units..... IV. 87
Electrical engineering, progress in.....II. 435; IV. 85
Electric welding, C. J. H. Woodbury..... X. 95
" *speed recorder, an*, G. H. Barrus..... IX. 377
Electro plating of steel, effect of..... IX. 715
Electromotors for shops..... X. 823
Elements of expense of friction..... VI. 440
Elevated R. R. and rapid transit, F. E. Galloupe..... VII. 81
Elevator buckets..... VIII. 117
" engines, spur gear for..... VIII. 85
Elder's experiments on combustion..... VI. 567
" marine boilers..... VI. 574
Ellipsograph..... VIII. 147
Ellis bisulphide-of-carbon engine..... VII. 684
Elutriated powders for grinding..... V. 258
Embossed work, female die for..... VII. 153
EMERSON, B. F., memorial of..... VIII. 727
Emerson's flume..... VIII. 366
EMERY, A. H., at Holley memorial session..... III. 65
" " disc., casting of aluminium bronze..... VIII. 256
" " " annealing furnaces for castings..... VIII. 297
" " " drawing paper..... VIII. 306
" " " belts as grain conveyers..... VI. 411
" " " flow of metals.....VI. 659, 667
" " " pressures and speeds of journals..... VI. 852
" " " shell and water-tube boilers..... VI. 594
" " " steam stamps..... VI. 897
" " " technical education..... VI. 513
" " " torsion balance..... VI. 640
EMERY, C. E., an interesting indicator diagram..... IX. 293
" " alteration to the cross-head of Corliss engine..... II. 40
" " experiments with non-conductors of heat..... II. 84
" " estimates for steam users..... V. 282
" " development of compound engine and limit of steam pressure in marine boilers..... VIII. 472
" " notes for discussion on cylinder condensation, and the reduction of the same by the use of the compound engines..... VIII. 479
" " the comparative value of steam and hot water for transmitting heat and power..... VIII. 512
" " the polar planimeter..... VI. 496
" " on cost of power in non-condensing steam engine.... X. 233
" " disc., president's inaugural, 1880..... I. 22
" " " metric system..... I. 51
" " " strength in machine tools..... I. 121

PAGE

EMERY, C. E., disc., expansion in single and compound engine..... I. 188
" " " belt formula..... II. 97
" " " the "Superior"..... II. 115
" " " most economical point of cut-off..... II. 180
" " " inclined screw propulsion..... II. 454
" " " spruce beams..... IV. 184
" " " steam engine indicator..... IV. 187
" " " water hammer in steam pipes..... IV. 407
" " " water meter..... V. 69
" " " non-conducting coverings..... V. 108
" " " machinery at international exhibitions..... V. 122
" " " helical springs..... V. 191
" " " drawing office system..... V. 204
" " " perfect screw problem..... V. 256
" " " rules for boiler tests..... V. 270
" " " New York to Chicago in 17 hours..... V. 305
" " " indicators..... V. 336
" " " adoption of code for boiler trials..... VI. 378
" " " frictional resistance of engine and shafting.... VI. 474
" " " manufacture of cotton-seed oil..... VI. 435
" " " report of committee on steam boiler trials..... VI. 330
" " " shell and water-tube boilers.....VI. 579, 594
" " " sliding friction of rotation..... VI. 160
" " " technical education..... VI. 548
" " " torsion balance..... VI. 651
" " " tubular boilers.....VI. 115
" " " improvement in ferry-boats..... VII. 203
" " " non-conducting lining for steam cylinders..... VII. 375
" " " rating of boilers by horse-powers..... VII. 239
" " " turbine tests..... VIII. 417
" " " piston packing rings..... VIII. 453
" " " different kinds of belting..... VIII. 561
" " " a problem in profit sharing, and the labor question.....VIII. 649, 659
" " " the needs of our navy..... VIII. 580
" " " calculating machines..... VIII. 709
" " " counterbalancing a locomotive..... X. 315
" " " the identification of dry steam..... X. 378
Emery, for drilling glass..... VII. 393
Enameling of cylinder surface..... VII. 379
Endowment for experimental research..... VII. 589
Endurance of spiral springs..... IV. 345
Engine, blowing, at Wyandotte..... VI. 50
" compound, see compound engine.....
" compound in grain elevator.....VI. 408, 410
" compound, for ferry-boat.....VII. 192, 203
" for Meig's elevated R. R..... VII. 105
" gas, see gas engine.....
" steam, see steam engine.....
" *steam, tests at the Massachusetts Institute of Technology*, C. H. Peabody..... VII. 328

PAGE
Engineer as an economist, the, H. R. Towne..... VII. 428
Engineering design..... IV. 81
Engines of S. S. "Iris"..... I. 227
" of long stroke..... II. 76
" steam on water wheel shaft..... II. 77
" vertical balanced..... IV. 368
" foundations of re-enforced beton for..... IV. 395
" three cylinder..... I. 178
" compound for manufacturing purposes..... X. 48
" compound, dimensions of..... X. 61
" triple expansion..... X. 576
ENGEL, L. G., disc., divergencies in flange diameters..... IX. 130
" " " fit of set screws..... IX. 334
" " " kerosene oil in steam boilers..... IX. 255
" " " surface condensers..... IX. 429
" " " the influence of sugar upon cement..... IX. 291
Ericsson air engine and air ship..... VII. 706
" horizontal grip driving wheels..... VII. 124
" JOHN, memorial notice of..... X. 845
" memorial resolutions..... X. 473
Error in calorimetric work, limits of..... VI. 785
Errors of calorimeters..... X. 375
Error in the Encyclopædia Britannica, J. B. Webb..... X. 778
Essay on progress of mechanical science, 1824–1882, F. Fraley..... III. 200
Essen water-gas plant..... VII. 677
Estimates for steam users, C. E. Emery..... V. 282
Estimation of expenses in a given plant..... III. 275
Estimating the cost of foundry work, G. L. Fowler..... IX. 390
Etching thin templets..... VIII. 296
Ether engine..... VII. 681
Ethics of engineering..... VII. 778
European trip, invitation..... X. 7
European trip of 1889..... X. 851
Eucalyptus extract for scale in boilers..... IX. 254
Evaporating by exhaust steam, Albert Stearns..... VIII. 421
Evaporative performances B. & A. engines..... IX. 628
Evaporative power of bituminous coals, W. Kent..... IV. 249
Evolution of the steam boiler..... VI. 585
EWER, R. G., disc., phenomena of steel..... X. 452
Excavators, steam, W. L. Clements..... IX. 515
Excessive firing, effects of..... VI. 794
Exchanges, list of..... VII. 16
Exchanges in library..... X. 15
Excursions, Philadelphia meeting..... IX. 21
" Nashville " ..... IX. 358
" XVIIIth meeting..... X. 31
Exhaust-pipe, condensation in..... VII. 816
Exhaust steam for heat..... X. 52
Exhibitions, American Machinery at International, T. R. Pickering.. V. 118
Expansion of maximum efficiency, R. H. Thurston..... II. 128

PAGE
Expansion of air and steam ..... I. 219
" " *steam, note on*, R. H. Thurston ..... II. 338
" " " *and water without transfer of heat*, A. F. DuFaur. III. 208
" at maximum efficiency of fluid and capital ..... III. 278
" " minimum cost for a given plant ..... III. 279
" *in single and compound engines*, J. C. Hoadley ..... I. 155
Expansion of steel in hardening ..... IX. 726
Expansion *per se* ..... VIII. 480
Expansion of timber due to the absorption of water, De Volson Wood. X. 539
Experimental mechanics, O. Smith ..... II. 55
Experimental steel works at Wyandotte, W. F. Durfee ..... VI. 40
Experiments and experiences with blowers, H. I. Snell ..... IX. 51
Experiments at Novelty Iron Works ..... I. 184
Experiments with non-conductors of heat, C. E. Emery ..... II. 34
" *on the adhesion of belts*, S. Webber ..... II. 225
" by Escher ..... IV. 90
" *upon non-conducting coverings for steam pipes*, J. M. Ordway ..... V. 73, 212; VI. 168
Experiments on the transmission of power by belting, Wilfred Lewis.. VII. 549
" " " " " " *gearing* " " .. VII. 273
Experiments on counterbalancing the reciprocating parts of a locomotive, G. Lanza ..... X. 302
Explosive energy of steam boilers, R. H. Thurston ..... VI. 199
Extension of spiral springs ..... IV. 347
Eye-bars of steel ..... IV. 411
" tests of ..... IV. 412

Factor of safety ..... VIII. 158
Fahnejelm, Otto, magnesia light ..... VIII. 669
Failure of cotton compress ..... III. 106, 119
" Pemberton Mill ..... III. 25
FALKENAU, ARTHUR, disc., fit of set screws ..... IX. 336
" " " power for machine tools ..... VIII. 313
Fans, power to drive ..... VIII. 313
Fatigue of metals ..... V. 154; VII. 245
FAWCETT, EZRA, disc., large blue prints ..... IX. 700
" " " inserting and securing crank pins ..... IX. 447
" " " piston packing rings ..... VIII. 449
" " " phenomena of steel ..... X. 437
" " " lubrication ..... X. 816
Fed and unfed castings ..... VI. 98
Feed motions ..... IX. 167
Feed pumps for boilers ..... VIII. 298
FELTON, EDGAR C., notes on steel tested shortly after rolling ..... IX. 38
" " disc., experiments with blowers ..... IX. 68
FERNIE, F., at Holley memorial session ..... III. 48
Ferrara marsh pumps ..... VIII. 607
Ferro-phosphorus alloys ..... III. 87
Ferro-silicon alloys ..... III. 88
Ferry-boats, improvement in, Wm. Cowles ..... VII. 190

PAGE
Fibrous iron, cause of ..... IX. 541
Fibrous structure of iron ..... VII. 243
Field boiler ..... VI. 574
Field of mechanical engineering, A. L. Holley ..... I. 23
Files, sharpened by acid process ..... VIII. 325
" sharpened by sand blast ..... VIII. 324
Fillings for rope sheaves ..... VIII. 317
Filter-pump on ejector principle ..... VII. 804
Filtration of scaling waters for boilers ..... VII. 628
" " water under pressure ..... VII. 621
Finance committee, report of ..... VIII. 9
Finance of lubrication, theory of, R. H. Thurston ..... VI. 437
Finance committee, report of ..... X. 9
Fire boats, William Cowles ..... VIII. 182
FIRMSTONE, F., disc., foundry cupola experience ..... X. 98
Fire-brick furnaces for boilers ..... VII. 790
Fire-boxes on P. & R. R. R. ..... VII. 392
Fire-proof construction ..... II. 497; IV. 399, 401
Fire protection of mills, C. J. H. Woodbury ..... II. 301
Fires caused by pipe coverings ..... V. 102
First rolling-mill in America, W. H. Harrison ..... II. 103
Fish, displacements and area curves of, H. de B. Parsons ..... IX. 679
FITCH, C. H., disc., *engineer as an economist* ..... VII. 471
" " " *valve dynamometer* ..... VII. 640
Fittings, cast-iron, W. J. Baldwin ..... IV. 274
Flandrin's ammonia omnibus ..... VII. 687
Flange diameters, divergencies in, P. A. Sanguinetti ..... IX. 124
Flange pipe, new method of casting, J. E. Sweet ..... IV. 237
Flanges for copper pipe ..... IX. 129, 715
Flexibility of bronze ..... VIII. 251
Flexible couplings for lake steamers ..... VII. 525
" shafts for marine engine ..... VII. 523
" hulls for vessels ..... IX. 646-659
Flexure combined with tension ..... IX. 540
Floating forts ..... VIII. 579
Flow in pipes ..... VIII. 525
" of metals under drop-press ..... V. 59
" of superheated steam through an orifice ..... VII. 183
" *of steam in a tube*, C. H. Peabody ..... X. 316
" *of metals, early experiments involving the*, W. E. Ward ..... VI. 655
Flue-gases, analysis of ..... VI. 786
" per pound of coal ..... VI. 796
" solid carbon and ash in ..... VI. 829
Fluid governors ..... IX. 309
Fluorine as dephosphorizer ..... I. 187
Flying extensions for coal conveyers ..... IX. 270
" rope for transmitting power ..... VIII. 315
Footings for piers in yielding earth ..... VII. 801
Force of spring in indicator drums ..... VII. 507
" to slide a valve on its seat ..... IV. 150

PAGE
Forging of gun steel ..... VIII. 598
" of steel *vs.* iron ..... III. 197
" poor, of crank-pin ..... VI. 855
Forgings lose 50 per cent. in weight ..... III. 195
Formula and tables for reciprocating parts of high-speed engines, G. I. Alden ..... VIII. 191
Formula for belt transmission ..... VIII. 537
" " *leather belts*, A. F. Nagle ..... II. 91
" " friction of valves ..... IV. 162
" " shafting ..... VII. 142
" " helical springs ..... IV. 341; V. 175
" of steam, for engines ..... V. 293
" " " hydraulic elevators ..... V. 294
" " " pumps ..... V. 294
" " " steam elevators ..... V. 295
" " " heating water ..... V. 295
" " " jets ..... V. 295
Formulas for saturated and superheated vapors, De Volson Wood ..... X. 670
Formulæ for bisulphide-of-carbon engine ..... VII. 720
" " condensing areas ..... IX. 421
" " shafting ..... VI. 466
FORNEY, M. N., disc., screw threads ..... I. 128
" " economy of fuel in the steam engine ..... I. 278
Fortification board, estimates of ..... VIII. 583
Fortifications, requirements of ..... VIII. 584
Foundations for engines ..... IV. 386, 395
" upon yielding earth ..... VII. 797
Foundry cupola experience, F. A. Scheffler ..... IX. 496; X. 89
" *work, estimating the cost of*, G. L. Fowler ..... IX. 390
FOWLER, GEORGE L., estimating the cost of foundry work ..... IX. 390
" " disc., standard pipe report ..... VIII. 42
" " " capital's need for high-priced labor ..... VIII. 285
" " " power for machine tools ..... VIII. 313
" " " a problem in profit-sharing and the labor question ..... VIII. 653
Fox corrugated tubes ..... VI. 847
Fractures of shafting ..... VIII. 140
FRALEY, F., progress of mechanical science, 1824 to 1882 ..... III. 200
Frames for cranes ..... IV. 300
Franchot air engine ..... VII. 705, 708
Francis's hydraulic experiments ..... VIII. 364
" tubes ..... IX. 510
Franklin Institute, standard of H. P. for boilers ..... VI. 880
Freezing in hot-water systems ..... IX. 439
French cam for engine valves ..... VII. 785
French locks ..... V. 128
Friction as a factor in motive power expenses, J. E. Sweet ..... I. 143
" coefficients of ..... I. 88
" *of lubricating oils, measurement of*, C. J. H. Woodbury ..... I. 78
" " drop-press ..... V. 60, 62

PAGE

Friction of locomotives ..... I. 152
" " metals under steam ..... I. 151
" " valves under inelastic fluids ..... IV. 159
" on crank pin ..... I. 153
" of indicator ..... V. 333
" in belt transmissions ..... VI. 473
" " mills, per cent. of ..... VI. 462
" of engines ..... VI. 467, 474
" " journals ..... VI. 123
" " lubricating oils ..... VI. 136
" work of ..... VI. 124
" elements of expense of ..... VI. 440
" heat due to ..... VI. 125
" *of rotation, theory of*, R. H. Thurston ..... VI. 122
" *in toothed gearing*, F. Reuleaux ..... VIII. 45
" of condensing engine ..... VIII. 108
" " *non-condensing engines*, R. H. Thurston ..... VIII. 86
" gear ..... IX. 715
" in governors ..... IX. 315
" " *toothed gearing*, Gaetano Lanza ..... IX. 185
" of engines ..... IX. 74
" " engines at different cut-offs ..... IX. 82
" " pistons ..... IX. 87
" " pumps ..... IX. 481
" " different metals in steam ..... VII. 640
" " gearing ..... VII. 296
" " slide-valves ..... VII. 639, 641
" " *engines, distribution of internal*, R. H. Thurston ..... X. 110
" " *piston-packing rings in steam cylinders*, J. E. Denton ..... X. 392
" in a mechanical power ..... X. 402
" " train of wheel-work ..... X. 406
" " transmitting dynamometer ..... X. 514
Frictional resistance of engine and shafting in mills, J. T. Henthorn . VI. 461
" " " *shafting in engineering establishments*, Samuel Webber ..... VII. 138
Frischen's multiplex telegraphy ..... IV. 322
FRITH, A. J., note on diameters of cone and step pulleys ..... X.
Frot ammonia engine ..... VII. 687
FUCH's method of cone pulleys ..... X. 281
Fuel consumption report ..... VIII. 622
Fuel in single engine ..... I. 22
FULLER, L. K., disc., non-conductors of heat ..... II. 36
" " " " phenomena of steel ..... IX. 432
Furnace and boiler efficiencies ..... III. 247
" best fitted for bituminous coals ..... IV. 257
Furnace for axles, Cambria iron works ..... IX. 139
Fund for publication ..... IV. 10
Future possibilities of heat engines ..... VII. 715

Gain-sharing, H. R. Towne ..... X. 660

PAGE
GALE, H. B., disc., circulation in steam boilers..... IX. 492
" " " electro-plating of steel..... IX. 716
" " " performance of a compound engine..... IX. 548
GALLOUPE, F. E., rapid transit and elevated railroads..... VII. 81
Gamgee, zero motor..... VII. 699
Gantt and Maury on non-aqueous vapors.....VII. 785, 789, 686
Gas and smoke in blacksmith shops..... VIII. 697
Gas engines.....V. 345; VII. 694
Gases dissociation of..... II. 54
Gas-firing for boilers..... I. 273
Gas-firing for smoke prevention..... VII. 794
Gas fuel for car heating..... IX. 461
GASKILL, HARVEY F., memorial notice of..... X. 833
Gas lighting by incandescence, James Dredge..... VIII. 663
Gas, natural, as steam fuel..... V. 345, 360
" " report on, see natural gas.
Gauge Committee, Report..... IV. 21
Gauge system standard, G. M. Bond..... III. 122
Gauges, in test of boilers at Pacific Mills..... VI. 731
Gauges, change of size in..... X. 416
Gear teeth, working pressure..... VIII. 699
Gear tooth, a persistent form of, J. B. Webb..... IX. 398
Geared pumping engines..... II. 79
Gearing, experiments on the transmission of power by, Wilfred Lewis VII. 273
Gearing, friction in..... VIII. 45
Gearing, friction of..... IX. 185
Gearing, speed of, at pitch-line (184–4)..... VI. 862
GEER, J. H., disc., data for steam heating..... VI. 860
Geissler, bulbs in analysis of flue-gases.....VI. 780, 789
German shrinkage allowance..... IX. 451
Geyelin turbine tests..... VIII. 416
GIDDINGS, C. M., a valve dynamometer for measuring the power required to move slide-valve..... VII. 631
" " disc., condensation in exhaust pipe..... VII. 818
" " " feed apparatus for boilers..... VIII. 298
" " " flying-rope..... VIII. 316
" " " grinding-room grit..... VIII. 299
Giffard's packing for pneumatic engines..... VII. 381
" theory of annular jet..... VII. 805
GILL, J., disc., metric system..... I. 53
Gilman steam and flue-gas engine..... VII. 693
Gintl's multiplex telegraphy..... IV. 321
Girders for cranes..... IV. 300
Girders, strains in..... VIII. 159
Glass cylinder, condensation in..... I. 185
GOBEILLE, J. L., disc., engineering problems for senior students.... VIII. 335
" " " a foundry cupola experience..... IX. 502
" " " a plea for the printing press in engineering schools..... IX. 410
" " " a safety car heating system..... IX. 464

PAGE
GOBEILLE, J. L., disc., automatic regulator for heating apparatus... IX. 440
Gold plating of springs.... VII. 386
Gold's storage heater for cars.... IX. 473
GORDON, F. W., disc., regenerating metallurgic furnaces.... I. 62
" " " efficiency of crank.... I. 238
" " " economy of fuel in the steam engine.... I. 274
" " " submarine telegraph work.... II. 358
GORRINGE, H. H., memorial notice of.... VI. 875
Government specifications.... VIII. 159
Governor, an improved form of, F. H. Ball.... IX. 300
Governor, Silver *vs.* Porter.... IX. 320
Governor, wire-drawing by.... II. 344
Governor in factory compound engine.... I. 179
Gowing's drum-testing device.... V. 320
Grain conveyers, belts as, T. W. Hugo.... VI. 400
Grain handling in California, J. H. Cooper.... VII. 650
GRANT, J. J., the milling machine as the substitute for the planer in machine construction.... IX. 259
" " disc., power press problems.... IX. 166
" " " standard section lining.... IX. 116
" " " standard fittings.... IV. 286
" " " economy in lubrication.... IV. 317
" " " spiral springs.... IV. 448
" " " beton as building material.... IV. 400
" " " capital's need for high-priced labor.... VIII. 289
" " " intrinsic value of special tools.... VIII. 264
" " " drop press.... V. 62
" " " properties of metals and alloys.... V. 147
Graphical viscosimeter.... IX. 375
Graphic solution for efficiency of crank.... I. 230
Graphic method applied in boiler test.... V. 274
Grate areas for culm-burning.... VII. 391
Grate, double, for steam boilers.... VII. 793
Grates of boilers in Pacific Mills.... VI. 684
Gray's harmonic multiplex telegraphy.... IV. 332
Grease for lubrication.... IV. 315; X. 810
Great Western, steam pressure in.... VIII. 472
Green's economizer.... VI. 677
GREEN, H., winding and pumping machinery of Penn.... IV. 217
" " disc., adoption of code for boiler trials.... VI. 881
" " " oxidation of metals.... VI. 631
" " " technical education.... VI. 554
" " " number of meetings.... X. 21
GREENHILL, A. G., discusses an error in the "Encyclopædia Britannica".... X. 789
GREGORY, H. P., memorial notice of.... X. 834
Grenoble bridge.... V. 111
Greiner and Erpf's improvement in cupolas.... X. 92
GRIMSHAW, R., disc., rolled steel car wheels.... II. 298
" " water meter.... V. 68

PAGE

GRIMSHAW, R., disc., non-conducting coverings..... V. 102
" " " machinery at international exhibitions..... V. 128
" " " properties of metals and alloys..... V. 152
" " " coast defense..... VIII. 612
" " " tubes from solid bars..... VIII. 568
Grinding of conic curves..... VIII. 155
Grinding of screws..... V. 254
Grit in steam chest..... I. 150
Grit separation from grinding-rooms..... VIII. 299
Grinding machine for twist drills..... VII. 134
GRINNELL, F. H., disc., standard pipe and pipe threads..... VII. 322
Grouting under engine bed-plates.....IV. 380, 382
Grüson armor tests..... VIII. 598
" chilled castings..... VIII. 612
Guide rolling of steel..... IX. 39
Gun steel, forging of..... VIII. 593
Gun steel, properties of..... VIII. 594
Gun-barrels of steel..... X. 447
Gwynne pumps.....VII. 598, 607

HAGUE, C. A., mechanical correctness..... I. 239
" " comparison between different types of engines..... II. 287
HALL, A. F., method of arranging and indexing drawings and patterns..... II. 369
" " disc., large blue prints..... IX. 699
Hall's condenser..... IX. 417
Hall steam and flue-gas engine..... VII. 691
HALSEY, FREDK. A., a new rock drill..... VI. 71
" " " disc., calculating machines..... VIII. 707
" " " " Meigs's Elev. R. R..... VII. 122
" " " " standard section lining..... IX. 118
HAMILTON, ALEX., JR., memorial of..... X. 835
HAMILTON, HOMER, memorial of..... VIII. 726
HAMILTON, H., disc., balanced vertical engines..... IV. 384
" " " flow of metals.....VI. 662–664
" " " pressures and speeds of journals.....VI. 850–857
Hammer-Head, a novel, Wm. Hewitt..... VI. 77
Hammer-bar, fracture of.....VII. 242, 260
Hammering, effects of, on steel..... VII. 262
HAMMOND, G. W., disc., the unexpected which often happens..... VII. 159
HAND, S. A., disc., Bower-Barff process..... IV. 364
" " " perfect screw..... V. 241
" " " indicators..... V. 333
" " " the shop-order system of accounts..... VII. 482
Handling grain in California, J. H. Cooper..... VII. 650
Hand rolling of steel..... IX. 39
Hand training, necessity of..... VIII. 691
HANSCOM, W. W., memorial notice of..... IX. 787
Hardening steel..... VII. 157
HARDING, ——, disc., smoke-preventing furnaces..... VII. 794

PAGE

HARDWICK, WM., disc., lubrication ..... X. 813
Harmonic multiplex telegraphy ..... IV. 332
Harrison's sectional boiler ..... VI. 583
HARRISON, W. H., first rolling mill in America ..... II. 103
" " disc., most economical point of cut-off ..... II. 198
" " " crystallization of iron ..... VII. 261
Harvesters in California ..... VII. 653
Haskins Mach. Co. CS_2 engine ..... VII. 684
Haswell, C. H., on early pressures ..... VIII. 473
Hauser's header and thresher ..... VII. 651
HAWKINS, J. T., a plea for the printing press in mechanical engineering schools ..... IX. 403
" " automatic regulator for heating apparatus ..... IX. 431
" " the education of intuition in machine designing ... VIII. 458
" " disc., annular jet for ejector ..... VII. 805
" " " a problem in profit-sharing ..... VIII. 635
" " " capital's need for high-priced labor ..... VIII. 276
" " " crystallization of iron ..... VII. 253
" " " different kinds of belting ..... VIII. 559
" " " duty trials of pumping engines ..... IX. 485
" " " electro-plating of steel ..... IX. 718
" " " estimating the cost of foundry work ..... IX. 396
" " " engineer as an economist ..... VII. 484
" " " experiments on belting ..... VII. 581
" " " flying rope ..... VIII. 315
" " " friction of non-condensing engines ..... VIII. 109
" " " frictional resistances of engine and shafting .. VI. 476
" " " flow of metals ..... VI. 664
" " " friction in toothed gearing ..... IX. 223
" " " inserting and securing crank pins ..... IX. 447
" " " molecular strains in steel ..... IX. 723
" " " moulds for printing-press ink-rolls ..... VII. 806
" " " pressures and speeds of journals ..... VI. 853
" " " punched and sheared edges of steel ..... IX. 727
" " " shaft governors ..... IX. 309
" " " smoke in blacksmith shops ..... VIII. 699
" " " smoke-preventing furnaces ..... VII. 792
" " " steel car axles ..... IX. 152
" " " strains in locomotive boilers ..... IX. 540
" " " strength of shafting ..... VIII. 140
" " " the milling machine as a substitute for the planer ..... IX. 267
" " " technical education ..... VI. 545
" " " torsion balance ..... VI. 648
" " " training of a dynamic engineer ..... VII. 769
" " " twist drills ..... VII. 135
" " " valve dynamometer ..... VII. 645
" " " viscosity determinations of lubricants ..... IX. 376
" " " wire rope fastenings ..... IX. 677
" " " working stress of iron ..... VIII. 178

PAGE
Hawkins's steam and flue-gas engine..... VII. 692
HAYWARD, H. S., adjustable cut-off for marine engines..... IV. 136
Heat, carried off in flue-gases..... VI. 797
" due to friction..... VI. 125
" due to impact, effect of..... VII. 261
" engines, theory of..... VII. 710
" lost by CO in flue-gases..... VI. 799
" " H in flue-gases..... VI. 799
" " vapor in the air..... VI. 798
" " water in the coal..... VI. 797
" lost through masonry of setting..... VI. 568
Heating, a safety system for cars, H. R. Towne..... IX. 453
Heater, Gold's storage..... IX. 473
Heating and ventilating an office building, H. S. Snell..... IX. 99
Heating apparatus, automatic regulator for, J. T. Hawkins..... IX. 431
Heating by steam (184–3)..... VI. 857
" of air..... VII. 825
Heating surface in ventilating flues, W. P. Trowbridge..... III. 67
" " " the "Superior"..... II. 114
Heavy hammers for steel..... VII. 268
Hecker Bros.' experiments on non-conducting linings..... VII. 378
Helical seams in boiler-making, R. H. Thurston..... VIII. 357
" *springs*, J. W. Cloud..... V. 173
HEMINWAY, F. F., disc., cams for engine valves..... VII. 784
" " " methods for economy of fuel..... I. 272
" " " packing for rods and stems..... I. 250
" " " lubrication..... X. 811
HENNEY, J. B., disc., steel car axles..... IX. 146
HENNING, G. C., apparatus used in testing materials..... VI. 479
" " notes on steel..... VI. 410
" " disc., conicograph..... VIII. 155
" " " engineering problems for senior students..... VIII. 333
" " " natural gas..... V. 369
" " " standard fittings..... IV. 286
" " " strength of shafting..... VIII. 140
" " " the "Superior"..... II. 116
" " " working stress of iron..... VIII. 174
HENTHORN, J. T., power required to overcome the frictional resistances of engine and shafting in mills..... VI. 461
" " disc., frictional resistance of shafting..... VII. 143
Hercules turbine tests..... VIII. 399
HERMAN, LUDWIG, disc., drawing paper..... VIII. 306
" " " thin templets..... VIII. 295
HEWITT, WM., a novel hammer-head and die..... VI. 77
" " continuous rod mill of Trenton Iron Co..... II. 70
" " wire rope fastenings..... IX. 671
" " disc., balanced vertical engines..... IV. 380, 383
" " " Bower-Barff process..... IV. 363
" " " steel car axles..... IX. 147
" " " structure of steel..... IX. 47

PAGE
HEWITT, WM., disc., a problem in profit-sharing ..... VIII. 633
" " " tubes from solid bars ..... VIII. 565
HIBBARD, H. D., disc., phenomena of steel ..... X. 431
HICKS, W. C., memorial notice of ..... VII. 828
Hides, inequalities of ..... VIII. 561
HIGGINS, M. P., disc., drop-press ..... V. 60
High and low-speed engines, economy of ..... IX. 712
High-pressure surface condenser ..... VII. 211
High-priced labor, capital's need for, W. E. Partridge ..... VIII. 269
High-speed engines ..... II. 75
HILL, C. C., disc., casting of aluminium bronze ..... VIII. 253
" " " dredging machinery ..... VIII. 126
" " " flying rope ..... VIII. 315
" " " strength of shafting ..... VIII. 141
" " " "The Superior" ..... II. 113
HILL, WM., the crystallization of wrought-iron ..... VII. 241
HIMROD, D., aeration of steel ..... VI. 67
HINES, D. S., memorial notice of ..... VII. 828
Hinsdale process for steel ingots ..... X. 593
Hipp escapement ..... III. 184
Hirn's barrel calorimeter ..... VII. 186
History and development of winding and pumping machine, of Penn., H. Green ..... IV. 217
Hoadley collection, list of ..... VIII. 349
HOADLEY, J. C., memorial of ..... VIII. 724
" " at Holley memorial session ..... III. 54
" " expansion in single and compound engines ..... I. 155
" " report of a series of trials of a warm blast apparatus ..... VI. 676
" " specific heat of platinum ..... III. 174
" " tilting water meter for purposes of experiment ..... V. 63
" " use of the calorimeter as a pyrometer for high temperature ..... II. 42
" " disc., Trenton Rod Mill ..... II. 77
HOBBS, A. C., locks and their failings ..... VI. 233
" " disc., flying rope ..... VIII. 317
" " " power for machine tools ..... VIII. 309
" " " machinery at international exhibitions ..... V. 123
" " " properties of metals and alloys ..... V. 148
Hock petroleum engine ..... VII. 701
Hoisting engine for collieries ..... IV. 218
" gear for cranes ..... IV. 291
" machines, friction in ..... VIII. 716
Holes in steel, methods of drilling ..... VIII. 704
Holman's experiments on belting ..... VII. 849
Home Ins. Building of Chicago ..... VII. 800
HOLLEY, A. L., at Troy ..... VI. 68
" " the field of mechanical engineering ..... I. 23
" " adaptation of Bessemer plant for basic process ..... I. 131
" " disc., regenerating metallurgic furnaces ..... I. 61

PAGE
HOLLEY, A. L., disc., methods of economy of fuel ..... I. 273
" " " calorimeter as pyrometer..... II. 54
" " " experimental mechanics..... II. 66
" " " first rolling-mill in America..... II. 105
" " " the "Superior"..... II. 116
" " memorial resolutions..... III. 11
" " " tribute to, J. C. Bayles ..... III. 34
" " " monument..... IV. 10
" " " address, R. W. Raymond..... IV. 35
Hollow shafts for marine engines..... VII. 523
HOLLOWAY, J. F., the marine engine of the lakes..... IV. 211
" " at Holley memorial session..... III. 56
" " president's address, 1885..... VII. 25
" " disc., basic Bessemer process..... VII. 78
" " " adjustable cut-off ..... IV. 141
" " " belts as grain conveyers..... VI. 409
" " " comparison of indicators ..... V. 336
" " " crystallization of iron..... VII. 261
" " " expansion in single and compound engines. I. 182
" " " flow of metals..... VI. 658
" " " frictional resistance of shafting..... VII. 143
" " " improvement in ferry-boats..... VII. 200
" " " machinery at international exhibitions.... V. 122
" " " manufacture of cotton-seed oil..... VI. 435
" " " non-conducting coverings..... V. 109
" " " original Bessemer plant at Troy..... VI. 66
" " " pressure and speed of journals ..... VI. 857
" " " report of committee on steam-boiler trials. VI. 320–330
" " " river practice of the West ..... IX. 664
" " " sliding friction of rotation ..... VI. 159
" " " steam stamp..... VI. 395
" " " steam engine indicator..... IV. 188
" " " technical education..... VI. 525
" " " true crank shafts and bearings..... VII. 525
" " " valve dynamometer..... VII. 643
" " " welded *vs.* riveted work ..... VI. 844
" " " friction of piston-packing rings..... X. 398
" " " " " " " ..... X. 462
" " " number of meetings..... X. 22
Holyoke flume..... VIII. 371, 383
Honorary members in perpetuity ..... III. 4
" " elected in 1882..... IV. 18
Hook gauge..... VIII. 379
HORNIG, J. L., economy by subdivision in operating machinery..... IV. 293
Horse power, cost of..... VI. 453
" of boilers ..... VI. 265–302
" in mills..... VI. 450–473
" per loom..... VI. 464
" of the "Superior"..... II. 114
" for Edison dynamo..... III. 224

PAGE
Horse-power of boilers.....V. 284; VI. 256; VII. 214
" used in United States in 1880..... VIII. 360
HOTCHKISS, D. H., memorial notice of ..... VI. 873
Hot-fed *vs.* cold-fed castings..... VI. 99
Howard alcohol engine..... VII. 681
Hoyt's experiments with bituminous coal..... VII. 793
Hughes's CS_2 engine..... VII. 684
HUGO, T. W., belts as grain conveyers..... VI. 400
" " disc., grain handling in California..... VII. 666
Hugon gas engine..... VII. 699
HUNT, A. E., disc., natural gas..... V. 364
HUNT, R. W., original Bessemer plant at Troy..... VI. 61
" " disc., cambering arrangement of Lackawanna I. & C. Co..... IV. 116
" " at Holley memorial session ..... III. 50
" " disc., phenomena of steel..... X. 447
Hunting of governors..... IX. 302
HUSTON, C. L., disc., circulation in steam boilers ..... IX. 494
" " " punched and sheared edges of steels..... IX. 731
" " " phenomena of steel ..... X. 433
HUTTON, F. R., note on mineral wool as non-conducting covering.... III. 228
" " (L. H. RUTHERFORD), should a piston-packing ring be of the same thickness at every point?..... VIII. 439
" " strains in an annular lid-resisting internal pressure.. X. 32
" " disc., flying rope..... VIII. 321
" " " a plea for the printing-press in engineering schools..... IX. 409
" " " a safety car-heating system..... IX. 463
" " " a short way to keep time and cost ..... IX. 386
" " " age of steam boilers.. ..... II. 519
" " " cylinder condensation and the compound engine VIII. 499
" " " driven wells..... IX. 327
" " " duty trials of pumping engines ..... IX. 486
" " " electro-plating of steel..... IX. 720
" " " inserting and securing crank-pins..... IX. 448
" " " most economical point of cut-off..... II. 201
" " " novel hammer-head ..... VI. 79
" " " standard section lining..... IX. 113
" " " tubes from solid bars..... VIII. 568
" " " joints of boiler shells..... X. 714
" " " compound engines for manufacturing purposes X. 75
" " " number of meetings..... X. 26
Hyatt apparatus for filtration ..... VII. 618
Hydraulic lift in basic Bessemer process..... VII. 41
Hydraulic foot-step for vertical shaft.....VI. 851–856
Hydrants for fire protection..... II. 316
Hydro-mechanics, progress in ..... IV. 81
Hyperbolograph..... VIII. 152

Ice, effects of, on ferry-boats ..... VII. 194

PAGE
Ice machinery, absorption system of, H. F. J. Porter..... II. 212
" " by compressed air..... II. 213
" " " ammonia and ether..... II. 214
" " " SO_2..... II. 215
IDE, A. L., disc., lubrication..... X. 812
Ide governor..... IX. 306
Identification of dry steam, J. E. Denton..... X. 349
Ignorance of copper alloys..... III. 392
" " stone, brick, wood, etc..... III. 91
Imperial standard yard..... II. 82
Improved form of shaft governor, an, F. H. Ball..... IX. 300
Improved mercury column, D. N. Melvin..... II. 98
" *method of screw propulsion*, J. B. Root..... II. 442
Improvements in ferry-boats, Wm. Cowles..... VII. 190
Improved motion device for engine indicators, A. W. Jacobi..... X. 586
Impurities in basic steel..... VII. 44
Inaugural address, 1880, R. H. Thurston..... I. 7
Incandescence, gas-lighting by, Jas. Dredge..... VIII. 663
Inclined armor for vessels..... VIII. 577
Incombustibility of beton..... IV. 388
Incorporation of the Society.....II. 387; III. 3
Indexing note-books, best system for (184–6)..... VI. 863
Indicator, another new, C. W. Barnaby..... VII. 489
Indicator cards, Strong locomotive..... IX. 563
" " B. & A. engine..... IX. 590
" " C. R. R. of N. J. engine..... IX. 592
" " D., L. & W. " ..... IX. 568
" " L. B. & S. C. " ..... IX. 594
" " of Worthington engines..... III. 135
Indicator diagram, an interesting, C. E. Emery..... IX. 293
Indicator diagram of CS_2 engine.....VII. 685, 738
Indicator, new form of, J. B. Webb..... IV. 182
" under varying loads..... IV. 188
Indicators, comparison of three modern types of, G. H. Barrus..... V. 310
" errors of..... I. 189
Indicators, improved device for, A. W. Jacobi..... X. 586
Inertia of engine valves..... VII. 638
" " paper drums of indicator..... VII. 500
" " of steam in pipes..... IX. 298
Influence of sugar upon cement, H. de B. Parsons..... IX. 286
Infiltration of air through brick-work..... VI. 700
Ingots, piping of steel, T. S. Crane..... X. 592
Ingot cranes, cylinders and mast for..... IV. 242
" " breaking block for..... IV. 244
" " *remarks on the ordinary form of*, G. Curtis..... IV. 239
Injectors for boilers..... VIII. 298
Injector, mechanics of the, J. B. Webb..... X. 339
Injured metal of punched or sheared edges..... IX. 727
In memoriam, H. R. Worthington..... II. 228
Inserted cutters for milling machines..... IX. 265

PAGE
Inspection and erection of contract work..... VII. 470
" of boilers..... IV. 148
" " material..... IV. 79, 411
Insurance on cotton-seed oil-mills..... VI. 436
Interchangeable parts in machinery..... IV. 80
Interesting indicator diagram, an, C. E. Emery..... IX. 298
Internal corrosion of steam chimneys..... III. 232
Internal friction in non-condensing engines, R. H. Thurston..... IX. 74
" " " engines..... X. 110
International exhibitions, American machinery at, T. R. Pickering... V. 118
Intrinsic value of special tools, Oberlin Smith..... VIII. 258
Introduction to essay on mechanical progress, C. Sellers..... III. 199
Introduction to non-conducting coverings, C. J. H. Woodbury..... V. 73
Intuition in machine-designing, J. T. Hawkins..... VIII. 458
Inventors of water-tube boilers..... VI. 601
Inventory valuation of machinery plant, Oberlin Smith..... VII. 433
Investigation as to how to test the strength of cements, J. Sondericker.. IX. 172
Invitation to foreign engineers.....II. 388, V. 17
Involute cutters for milling-machines..... IX. 269
" gear, failing case of..... VIII. 62
" " wearing in..... VIII. 63
Irregularity in the contraction of duplicate iron castings..... VII. 422
Iris, engine of S. S..... I. 227
Iron manufactures, growth of..... II. 419
" and steel industry of 1880..... III. 84
" made rustless..... IV. 351
" working stress of..... VIII. 157
Isherwood on aero-steam-engine..... VII. 737
Isherwood's evaporation per lb. of coal..... VI. 317
" experimental researches..... VIII. 480
" experiments on non-conducting coverings..... V. 108
" tests on U. S. steamers..... I. 188
Isochronism of governors..... IX. 313
Isodynamic curves in beams..... IV. 134
Is water-gas an economical fuel? William Kent..... VIII. 225

Jack shafts..... VI. 466
JACOBI, A. W., improved motion device in engine indicators..... X. 586
JACOBUS, D. S., steam consumption of engines at various speeds.... X. 722
Jamieson, C. D., on railroad engineering education..... VIII. 469
JARBOE, W. S., disc., natural gas..... V. 361
Jarvis engine..... XI. 141
JENKINS, W. R., oil-well sucker rods..... VIII. 295
JENKS, W. H., disc., temperature effect on the strength of iron and steel..... X. 720
" " " an error in the "Encyclopædia Britannica".... X. 786
JENNEY, W. L. B., disc., foundations in yielding earth..... VII. 798
Johnson hydrogen engine..... VII. 696
JOHNSON, L., crank pin of S. S. Knickerbocker..... I. 69
" brief treatise on the steamboat cam..... II. 122

PAGE
Johnson's & Meigs's experiments compared..... IV. 250
Joint committee of engineering societies.....III. 9; V. 17
Joints for flanged pipe..... IX. 252
" " *steam boiler shells*, J. H. Cooper ..... X. 707
JONES, DANIEL N., memorial notice of..... X. 836
JONES, W. R., memorial notice of..... VII. 827
JONES, W. R., disc., shell and water-tube boilers..... VI. 613
" " " technical education..... VI. 539
" " " natural gas..... V. 366
" " " memorial notice..... X. 838
Joule's experiments with surface condenser..... IX. 419
Journal bearings, relation of speed and pressures in (184–2)..... VI. 849
Journal bronzes..... IX. 147
Journals cramped by brasses..... VI. 159
Journals for Lick telescope..... IX. 330
" pressure on..... VI. 154
" wear of..... VI. 453
Journals, use of Babbitt metal for..... III. 225
Joy's valve gear..... V. 47

Kal defined..... V. 282
KENNEDY, J., disc., non-conducting coverings..... V. 112
Kennedy's experiments..... VIII. 163
KENT, WILLIAM, evaporative power of bituminous coals..... IV. 249
" " is water-gas an economical fuel?..... VIII. 225
" " rules for conducting boiler tests..... V. 260
" " tables for facilitating calculations of boiler tests... VI. 84
" " table of sizes of chimneys..... VI. 81
" " the torsion balance..... VI. 636
" " disc., adoption of code for boiler trials..... VI. 877
" " " alloys of copper-tin-zinc..... VIII. 339
" " " a novel chimney staging..... VII. 615
" " " a plea for the printing-press in engineering schools..... IX. 406
" " " apparatus for testing materials..... VI. 498
" " " a safety car-heating system..... IX. 464
" " " automatic regulator for heating apparatus... IX. 439
" " " belts as grain conveyers..... VI. 410
" " " built-up work..... III. 196
" " " capital's need for high-priced labor..... VIII. 281
" " " chains for cranes..... VIII. 711
" " " condensation in exhaust-pipes..... VII. 819
" " " conicograph..... VIII. 155
" " " culm-burning..... VII. 391
" " " data for steam heating..... VI. 558
" " " descending smoke-flues..... VII. 389
" " " divergencies in flange diameters..... IX. 181
" " " drilling holes in glass..... VII. 394
" " " duty trials of pumping engines..... IX. 487
" " " efficiency of a man at a crank..... VIII. 715

PAGE

KENT, WILLIAM, disc., electro-plating of steel..... IX. 718
" " " engineer as an economist..... VII. 482
" " " engineering problems for senior students..... VIII. 330
" " " estimates for steam users..... V. 296
" " " experiments on belting..... VII. 589
" " " friction of engines..... IX. 89
" " " friction of non-condensing engines..... VIII. 106
" " " flow of metals..... VI. 663
" " " indicators..... V. 336
" " " inserting and securing crank pins..... IX. 450
" " " manufacture of cotton-seed oil..... VI. 433
" " " mechanical circulation in steam-boilers..... VII. 815
" " " Meigs's Elev. R. R..... VII. 122
" " " mineral wool..... III. 230
" " " most economical point of cut-off..... II. 284
" " " natural gas..... V. 360
" " " New York to Chicago in 17 hours..... V. 307
" " " non-conducting coverings..... V. 111
" " " perfect screw..... V. 249
" " " power for machine tools..... VIII. 311
" " " pressures and speeds of journals..... VI. 851
" " " problem in profit-sharing..... VIII. 630
" " " punched and sheared edges of steel..... IX. 731
" " " purification of water..... VII. 628
" " " rating of boilers by horse-powers..... VII. 225
" " " relative value of water-gas and Siemens gas. VII. 677
" " " river practice of the West..... IX. 656
" " " report of committee on steam boiler trials.... VI. 320, 323, 346
" " " shell and water-tube boilers..... VI. 582
" " " sliding friction of rotation..... VI. 160
" " " speed of gear..... VI. 862
" " " standard pipe report..... VIII. 41
" " " standard section lining..... IX. 121
" " " strain in hardened steel..... VII. 307
" " " strains in boiler stays..... VIII. 719
" " " strains in locomotive boilers..... IX. 538
" " " strength of shafting..... VIII. 139
" " " substitutes for steam..... VII. 729
" " " systems of cataloguing and indexing..... VI. 864
" " " technical education..... VI. 528
" " " test commission..... III. 107
" " " the needs of our navy..... VIII. 578
" " " torsion balance..... VI. 651
" " " training of a dynamic engineer..... VII. 768
" " " true crank shafts and bearings..... VII. 523
" " " tubes from solid bars..... VIII. 568
" " " tubular boilers..... VI. 117
" " " valve dynamometer..... VII. 642
" " " welded *vs.* riveted work..... VI. 843

PAGE
KENT, WILLIAM, disc., working stress of iron ..... VIII. 171
" " " wrought-iron scrap in castings..... IX. 341
" " " electric welding..... X. 104
" " " mechanics of the injector ..... X. 341
" " " phenomena of steel.....X. 432, 452
Kerosene in steam boilers, L. F. Lyne ..... IX. 247
KERR, W. C., disc., feed apparatus for boilers..... VIII. 298
" " " shaft governors..... IX. 315
Keys and set screws, holding power of..... X. 224
Kilburn's non-conducting covering ..... II. 38
Kinematic models, Reuleaux's, J. B. Webb... ..... IV. 367
KING, C. I., disc., condensation in exhaust-pipe..... ..... VII. 816
" " " moulds for printing-press ink-rolls..... VII. 809
" " " smoke-preventing furnaces..... VII. 798
" " " training of a dynamic engineer..... VII. 780
KIRCHHOFF, C., disc., natural gas..... ..... V. 375
Knickerbocker, crank pin of S. S., L. Johnson..... I. 69
Kunstädter system of propeller rudders.....VII. 194, 202

Labor question, the..... VIII. 723
Labor-saving machines, economy of..... ..... VIII. 681
Laboratory of mechanical engineering equipment..... VIII. 327
Lackawanna rail cambering arrangement, W. K. Seaman..... IV. 106
LADD, J. B., disc., standard section lining ..... IX. 121
" " " shaft governors..... IX. 319
Laidley, Col., communication from ..... IV. 20
Lancashire flues... ..... VI. 846
LANPHEAR, O. A., disc., molecular strains in steel..... IX. 722
" " " rope transmissions..... IX. 710
LANZA, GAETANO, course in mechanical engineering at the Mass. Inst. Tech..... VII. 338
" " friction in toothed gearing .... IX. 185
" " strength of shafting subjected to both twisting and bending..... ..... VIII. 130
" " transmission of power by belting..... VII. 347
" " transverse strength and stiffness of spruce beams.. IV. 119
" " some tests of the strength of cast iron made in the laboratory of applied mechanics of the Mass. Inst. Tech .... X. 187
" " an account of certain experiments on several methods of counterbalancing the action of reciprocating parts of a locomotive..... X. 302
" " disc., a new steam calorimeter ..... VII. 184
" " " engineering problems for senior students.... VIII. 331
" " " equipment of engineering laboratory..... VIII. 327
" " " power for machine tools..... VIII. 309
" " " reciprocating parts of high-speed engine.... VIII. 303
" " " testing of small engines..... VII. 380
" " " test commission..... III. 108

PAGE
LANZA, GAETANO, disc., testing the strength of cements..... IX. 181
Large and enlarged photographs and blue prints, R. H. Thurston.... IX. 696
Large sections weaker than small..... IV. 76
Latest method of submarine telegraph work, T. W. Rae..... II. 349
Lathe spindles..... I. 121
Lauberau air engine..... VII. 706
LAUREAU, L. G., disc., rolled steel car-wheels..... II. 297
Lawson's experiments..... VI. 220
Lay, T. W., designer lake vessels..... VIII. 473
Lead drills for glass..... VII. 393
Lead of valves..... I. 154
" screws.....I. 129; III. 128
Leather as hygrometer..... VIII. 553
Leather belts, tests of..... VIII. 538
" " tractive force of..... X. 765
LEAVITT, E. D., JR., the "Superior"..... II. 106
" " " disc., balanced vertical engines..... IV. 384
" " " " beton as building material..... IV. 402
" " " " Bower-Barff process..... IV. 364
" " " " crosshead of Corliss engine..... II. 41
" " " " estimates of steam uses..... V. 297
" " " " expansion in single and compound engines I. 170
" " " " lining for brake straps..... IX. 331
" " " " machinery at international exhibitions... V. 121
" " " " most economical point of cut-off..... II. 191
" " " " New York to Chicago in 17 hours..... V. 306
" " " " non-conducting coverings..... V. 108
" " " " notes on steel..... IV. 432
" " " " properties of metals and alloys..... V. 152
" " " " rules for conducting boiler tests..... V. 277
" " " " spiral springs..... IV. 349
" " " " Trenton rod mill..... II. 76
" " " " water meter..... V. 71
" " " " wrought-iron scrap in castings..... IX. 341
Leavitt's steam stamp..... VI. 380
Lébon gas engine..... VII. 695
Lenoir gas engine..... VII. 699
Letter on Pemberton Mill..... III. 25
LE VAN, W. B., life-time or age of steam-boilers..... II. 503
" " New York to Chicago in 17 hours..... V. 301
" " disc., balanced vertical engines..... IV. 383
" " " beton as building material..... IV. 401
" " " boiler inspection..... IV. 149
" " " Bower-Barff process..... IV. 363
" " " casting of aluminium bronze..... VIII. 249
" " " conicograph..... VIII. 156
" " " divergencies in flange diameters..... IX. 120
" " " drawing paper..... VIII. 306
" " " Edison's steam dynamo..... III. 225
" " " estimates for steam users..... V. 299

PAGE
LE VAN, W. B., disc., feed apparatus for boilers... VIII. 299
" " " fire boats... VIII. 190
" " " heating and ventilating a building... IX. 105
" " " indicators... V. 335
" " " notes on steel... IV. 433
" " " rules for boiler tests... V. 268
" " " screw propulsion... II. 462
" " " standard fittings... IV. 280
" " " test commission... III. 118
" " " tubular boilers... VI. 120
" " " upright boilers at Roxbury pump station... III. 299
Level of water in a boiler... IX. 493
Lewis, James, platinum lamp... VIII. 671
LEWIS, WILFRED, experiments on the transmission of power by belting VII. 549
" " " " " " " gearing VII. 273
" " disc., friction in gearing... VIII. 67
" " " friction in toothed gearing... IX. 217
" " " loads on tires... VII. 786
" " " power-press problems... IX. 167
" " " power for machine tools... VIII. 307
" " " reciprocating parts of high-speed engines... VIII. 214
" " " valve dynamometer... VII. 643
Library committee, report of... VII. 18; VIII. 11; X. 11
Library, donations to... IX. 13
Life time, or age, of steam boilers, W. B. Le Van... II. 503
" of boilers, axles, etc... IV. 147
Limit gauges for pipes and threads... VII. 317
Limit of steam pressure in marine boilers... VIII. 472
Limit of steam pressure... VI. 572, 581
Limits of error in calorimetry... VI. 785
Limits of weakness in hardened steel... VII. 398
Linings for chimney stacks... VII. 615
Link belts, performance of... VIII. 552
" " tests of... VIII. 543
Lintels, cast-iron, strength of... X. 217
Liquation in steel... VII. 250
Livadia, boilers of... IV. 418
LIVERMORE, C. W., disc., river practice of the West... IX. 661
Load for steel tires on steel rails... VII. 785
" on rolling cams... VII. 788
Local committees, New York, 1882... IV. 1
" " Cleveland, 1883... IV. 193
" " New York, 1883... V. 3
" " Pittsburgh, 1884... V. 159
Lock, Andrews'... VI. 242
" Bramah... VI. 248
" Chubb... VI. 250
" Cotterill... VI. 253
" Dial... VI. 239
" Egyptian... VI. 235

PAGE
Lock, Letter Pad. ..... VI. 238
" Newell..... VI. 243
" Stansbury ..... VI. 236
" Tumbler..... VI. 240
Locks and their failings, A. C. Hobbs..... VI. 233
" warded..... VI. 233
Locomotive boilers, strains in, L. S. Randolph..... IX. 534
" counterbalancing..... X. 302
" coupling-rod.....VIII. 157, 171
" cylinders, cut-off valves for..... V. 305
" " port areas of..... V. 308
" " size of..... V. 305
" engine of G. H. Corliss ..... V. 306
" " performance..... IX. 602
" effect of, on rail..... VII. 787
Locomotives, head resistance from air.. ..... IX. 633
Locomotive, Strong, distribution of steam in, F. W. Dean.....IX. 556 ; X. 687
" *the old "Sampson,"* D. W. Robb..... X. 509
Locomotives, performance of..... VI. 452
LOISEAU, E. F., memorial notice of..... VII. 830
Long boilers, support of..... IV. 146
LORD, HORACE, memorial notice of..... VI. 872
Losses by friction in shafting..... VII. 139
" in combustion of coal..... VI. 796
Loss in transmitting power..... VIII. 375
" sharing..... VIII. 644
Low speed in engines..... I. 23
Lubricant in water of condensation..... VII. 818
" testing machine..... VI. 137
Lubricants, friction of, at varying pressure..... VI. 449
" prices of..... VI. 447
" valuation of, by consumers..... VI. 437
" *significance of viscosity of*, J. E. Denton..... IX. 369
Lubricated surfaces, pressure on..... I. 113
Lubricating candles..... X. 812
Lubrication of vertical engines..... X. 397
" " throttle-valve ..... X. 396
Lubricating oils, measurement of friction of, C. J. H. Woodbury..I. 73; VI. 136
Lubricator, best form of..... X. 810
Lubrication at high temperature. ..... I. 115
" by grease and oil..... IV. 315
" cost of..... IV. 315
" *economy in*, G. N. Conly..... IV. 315
" in superheated steam..... II. 119
" of Wyandotte engine..... VI. 52
" oil-bath system..... VI. 156
" on railroads..... VI. 451
" pad system of..... VI. 158
" *theory of the finance of*, R. H. Thurston... ..... VI. 437
LYNE, LEWIS F., packing for piston-rods and valve-stems..... I. 243

PAGE

LYNE, LEWIS F., bits of engine-room experience..... X. 696
" " " the use of kerosene oil in steam boilers ..... IX. 247
" " " the use of crude petroleum in steam boilers ..... X. 761
" " " disc., age of steam boilers..... II. 524
" " " " counterbalancing of engines..... II. 277
" " " " fit of set screws..... IX. 333
" " " " shaft governors..... IX. 317
" " " " compound engines for manufacturing purposes X. 84
" " " " number of meetings..... X. 24

MACCORD, A., disc., conicograph..... VIII. 154
MCFARREN, S. J., disc., electromotors for shops..... X. 836
" " " lubrication ..... X. 813
" " " manual training in schools..... X. 491
" " " cost of steam and water-power..... X. 507
Machine designs for students..... VIII. 330
" gun in Riel rebellion..... VII. 26
" *for testing physical properties of metals and alloys*, T. Egleston V. 140
" riveting..... IV. 146
" tools, power to drive ..... VIII. 307
Machinery, American, at International Exhibitions, T. R. Pickering. V. 118
Magnesia in feed water..... VII. 816
Magnesian bronze for springs..... VII. 385
" linings in basic Bessemer process..... VII. 75
MAGRUDER, W. T., disc., a plea for the printing-press in engineering schools..... IX. 410
" " " moulds for printing-press ink-rolls..... VII. 813
MAIN, C. T., on the use of compound engines for manufacturing purposes ..... X. 48
" " disc., phenomena of steel..... X. 435
" " regulator for receiving pressure..... X. 70
Malleable iron, properties of..... VIII. 251
Manchester Steam Users' Association..... IV. 142
Mandrel for true crank shafts..... VIII. 521
Manganese in steel..... X. 447
Manholes of wrought iron..... VI. 846
Man, the tool-making animal..... VI. 85
Manilla ropes ..... VIII. 317
Mannesman's tubes..... VIII. 564
MANNING, C. H., comparative cost of steam and water-power ..... X. 490
" " disc., compound engines for manufacturing purposes X. 84
MANSFIELD, A. K., disc., bits of engine-room experience..... X. 706
Manual training-schools..... VI. 527
" " school, St. Louis..... VII. 743
" " in schools, discussion on. ..... X. 491
Manufacture of cotton-seed oil, E. W. Thompson. ..... VI. 414
Mapes's experiments on cohesion of metals..... IX. 156
Marble, effect of heat on..... VI. 669
Marine engine of the lakes, J. F. Holloway..... IV. 211
" engines, pressure in..... VIII. 472

PAGE
Marine engines, proportions of ..... IX. 367
" governor ..... IX. 311
Marshall's valve gear ..... V. 45
Martin boiler ..... VI. 573
Masonry, heat lost through ..... VI. 568, 598
Mason's smoke-preventing furnace ..... VII. 789
Mast for ingot cranes ..... IV. 243
Master tap for perfect screw ..... V. 254
Material cards in shop-order system ..... VII. 452
Materials for springs ..... IV. 336, 348
Mather, ———, on technical education ..... VI. 540
MATTES, W. F., connecting rods ..... IX. 466
" " disc., a foundry cupola experience ..... IX. 503
" " " divergencies in flange diameters ..... IX. 131
" " " duty trials of pumping engines ..... IX. 486
" " " experiments with blowers ..... IX. 66
" " " fit of set screws ..... IX. 335
" " " soft castings ..... IX. 339
" " " stocking and reloading coal ..... IX 273
" " " Strong locomotive ..... IX. 632
" " " wrought-iron scrap in castings ..... IX. 341
" " " variable load, engine speed, and internal friction ..... X. 183
MAYNARD, G. W., Bower-Barff process for rustless iron ..... IV. 351
Mayor Maxwell, address of welcome ..... VI. 355
MCBRIDE, JAMES, disc., driven wells ..... IX. 328
" " " fit of set screws ..... IX. 336
Measuring machines ..... V. 242
Measurements of friction of lubricating oils, C. J. H. Woodbury ... I., 73; VI. 136
Mechanical circulation and filtration of water in steam-boilers ..... VII. 814
Mechanical correctness, C. A. Hague ..... I. 289
" *drawings, method of keeping*, C. T. Porter ..... II. 560
" *engineer, his work and his policy*, R. H. Thurston ..... IV. 75
" *engineering, field of*, A. L. Holley ..... I. 23
" engineering laboratory ..... VIII. 327
" " problems for senior students ..... VIII. 329
" laboratory ..... II. 65
" *significance of viscosity determinations of lubricants*, J. E. Denton ..... IX. 369
" stoker for boilers ..... VI. 588
" *theory of heat, study of*, A. R. Wolff ..... I. 211
" *vs.* dynamic engineering ..... VII. 765
" *power, overhauling of a*, J. B. Webb ..... X. 402
Mechanism for manœuvring clutch couplings, W. F. Durfee ..... IV. 311
" *employed in multiplex telegraphy*, T. W. Rae ..... IV. 321
Meetings, diminished number of ..... X. 19
Meigs elevated railroad, F. E. Galloupe ..... VII. 81
MELVIN, D. N., improved mercury column ..... II. 98
Members, honorary, elected ..... IV. 18
" elected, Xth meeting ..... VI. 8

PAGE
Members elected, XIth meeting..... VI. 360
" " Philadelphia meeting..... IX. 10
" " Nashville " ..... IX. 351
" present, XIVth meeting..... VIII. 2
" " XVth " ..... VIII. 343
" " Philadelphia meeting..... IX. 3
" " Nashville " ..... IX. 349
Membership, application for, altered..... IX. 8
Memoranda on the performance of a compound engine, G. H. Barrus. IX. 545
Memorial notices of members deceased, VI. 372; VII. 827; VIII. 724; IX. 787; X. 330
" of H. R. Worthington..... II. 228
" resolutions on the death of A. L. Holley..... III. 11
" to U. S. Senate on test commission..... III. 102
" session, A. L. Holley ..... III. 9, 29; IV. 3
Mercury column, improved, D. N. Melvin..... II. 98
" well in feed pipe..... V. 71
Merriam's steam stamp..... VI. 396
Merrill air engine..... VII. 731
Merrill's tests for friction of belts..... VII. 352
Merrimac, armament of..... VIII. 578
Merryweather's fire-engine..... VI. 573
Metal baths for tempering steel..... IX. 725
METCALFE, HENRY, the shop-order system of accounts..... VII. 440
METCALF, W., at Holley memorial session..... III. 51
" " disc., helical springs..... V. 185
" " " natural gas..... V. 362
" " " test commission..... III. 120
Meter, as unit for screws..... VIII. 686
" for consumption of steam..... VI. 336
" in steam boiler trials..... VI. 321
Method of arranging and indexing drawings and patterns, A. F. Hall II. 369
" of coiling springs..... IV. 336
" *of evaporating by exhaust steam*, Albert Stearns..... VIII. 421
" *of making tubes from solid bars*, G. H. Babcock..... VIII. 564
" *new, of casting flange pipe*, J. E. Sweet..... IV. 237
" " " *constructing a crank shaft*, J. E. Sweet..... IV. 231
Methods for heating air in flues..... III. 69
" for moving air in flues..... III. 68
Metric system, C. Sellers..... I. 29
" " calculations in..... I. 39
" " F. A. P. Barnard on..... I. 32
" " lead screws in..... V. 248
" " scales for drawings in ..... I. 37
" " standard sizes for..... I. 42
Micrometer, double, self-centering..... VI. 480
Microscope in the workshop, the, W. A. Rogers..... VII. 164
" for measuring elongations..... VI. 494
Microscopical study of metals and woods..... IV. 151
MIDDLETON, HARVEY, disc., strains in locomotive boilers..... IX. 538
Mill floors, C. J. H. Woodbury..... II. 468

PAGE
Mill friction..... VI. 449
" power..... VIII. 361
MILLER, A., disc., balanced vertical engines..... IV. 384
" " " evaporating by exhaust steam..... VIII. 425
" T. S., " electromotors for shops..... X. 827
" WILLIAM, memorial notice of..... X. 833
Milling cutters, cost of..... IX. 261
" *machine as a substitute for the planer in machine construction*, J. J. Grant..... IX. 259
" progress in..... IV. 83
Mine cars..... IV. 218
Mineral wool as non-conducting covering for steam pipes, F. R. Hutton III. 228
" " non-conductor..... V. 105
Minges' harvester..... VII. 653
MINOT, H. P., disc., a safety car-heating system..... IX. 464
" " " automatic regulator for heating apparatus..... IX. 441
" " " circulation in steam boilers..... IX. 493
" " " inserting and securing crank pins..... IX. 447
" " " molecular strains in steel..... IX. 722
" " " performance of a compound engine..... IX. 548
" " " river practice of the West..... IX. 660
" " " rope transmissions..... IX. 708
" " " smoke-preventing furnaces..... VII. 794
" " " strains in locomotive boilers..... IX. 540
" " " true crank shafts and bearings..... VII. 528
Mitchell's engine tests..... VIII. 86
Mitis metal..... VIII. 252
Mixture of pig irons..... VI. 105
Modulus apparatus..... VI. 488
Moisture in heated air..... VI. 623
Molasses, the influence of, upon cement..... IX. 287
Molecular structure of steel.....V. 245; IX. 716
MOORE, L. B., at Holley memorial session..... III. 63
Morey camphene engine..... VII. 696
MORGAN, C. H., disc., wrought-iron scrap in castings..... IX. 339
" JOSEPH, JR., our coast defense, its cost and its mechanical problems..... VIII. 582
" " " disc., cylinder condensation and the compound engine..... VIII. 496
" T. R., SR. disc., balanced vertical engines..... IV. 385
" " " " casting of aluminium bronze..... VIII. 249
" " " " cranes..... IV. 302
" " " " drop-presses..... V. 60
" " " " experiments on belting..... VII. 589
" " " " moulds for steel castings..... IX. 343
Morse recessed socket for pipe..... VII. 323
" taper for twist drills..... VII. 135
Mortar resisting fire.....II. 497; IV. 401
MORTON, H., disc., natural gas..... V. 374
Morton's belt formula..... VIII. 561

PAGE
Most economical point of cut-off in steam engines, Wolff-Denton.....II. 147, 281
Motion curves for cut-off valves, A. Wells Robinson..... V. 84
Moulds for printing-press ink-rolls..... VII. 806
" for steel castings.....VIII. 250; IX. 342
Movement of valves in Worthington engine..... III. 132
Muir, Prof., on technical education..... VI. 540
Multiplex telegraphy, mechanism employed in, T. W. Rae..... IV. 321

NAGLE, A. F., formula for the H. P. of leather belts..... II. 91
" " cornish or double-beat pump-valves..... X. 521
" " the best form of nozzles and diverging tubes..... IX. 505
" " disc., adhesion of belts..... II. 228
" " " a novel chimney staging ..... VII. 615
" " " circulation in steam boilers ..... IX. 492
" " " duty trials of pumping engines ..... IX. 486
" " " economy of ventilation ..... VII. 548
" " " flanges for copper pipe ..... IX. 715
" " " molecular strains in steel..... IX. 721
" " " performance of a compound engine..... IX. 554
" " " punched and sheared edges of steel..... IX. 733
" " " river practice of the West..... IX. 655
" " " rules for boiler tests..... V. 275
" " " Strong locomotive..... IX. 634
" " " surface condensers..... IX. 429
" " " Trenton rod-mill..... II. 79
" " " true crank shafts and bearings..... VII. 529
" " " upright boilers at Roxbury Pumping Station.... III. 299
" " " tractive forces of leather belts..... X. 769
" " on adoption of code for boiler trials..... VI. 875
Nagle formula for belt transmission..... VII. 562
Nails, cut at critical temperature..... VI. 664
Naphtha, in manufacture of cotton-seed oil..... VI. 436
NASON, C. W., disc., lubrication..... X. 814
" " " gain-sharing..... X. 623
" " " vapors and vapor engines..... X. 665
" " " standards..... X. 571
National turbine-wheel test..... III. 80
" University..... IV. 101
Natural gas as motive power.....V. 365, 367
" " " steam fuel..... V. 345
" " for industrial purposes, report on..... V. 340
" " combustibility of..... V. 350
" " cost of.....V. 345, 364
" " danger of..... V. 350
" " in iron manufacture .....V. 345, 362, 364, 365, 367
" " laws of Penn. on..... V. 352
" " odor of..... V. 375
" " pipes and joints for.....V. 348, 371
" " pressure of..... V. 349
" " properties of..... V. 357

PAGE

Natural gas wells ..... V. 343
Naval engineering, progress in ..... II. 431
Navies of Europe, organization of ..... VIII. 602
Navy, what are the needs of our, H. A. Ramsay ..... VIII. 574
Nevada Warehouse and Dock Co ..... VII. 660
NEWBERRY, S. B., method of enlarging photographs ..... IX. 699
New calorimeter, the, George H. Barrus ..... VIII. 285
" *form of balanced dynamometer*, S. S. & W. O. Webber ..... IV. 227
" " " *steam calorimeter, a*, G. H. Barrus ..... VII. 178
" " " " *engine indicator*, J. B. Webb ..... IV. 182
" *method for inserting and securing crank pins*, C. C. Collins ..... IX. 446
" " *of casting flange pipe*, J. E. Sweet ..... IV. 237
" " " *constructing a crank shaft*, J. E. Sweet ..... IV. 231
" " " " *tubular boilers*, F. A. Scheffler ..... VI. 110
" " " *keeping mechanical drawings*, C. T. Porter ..... II. 560
" " " *stocking and reloading coal*, J. M. Dodge ..... IX. 270
" *rock drill, a*, F. A. Halsey ..... VI. 71
" *principle in steam piston packing*, J. E. Sweet ..... IX. 91
" *valve motion*, C. Angstrom ..... V. 41
New York to Chicago in 17 hours, W. B. Le Van ..... V. 301
NICOLL, WM. L., memorial of ..... VIII. 728
Nichol's experiments with condenser tubes ..... IX. 420
NICHOLSON, S., disc., crystallization of iron ..... VII. 266
Nickel, application of ..... II. 416
Night-schools for engineering apprentices ..... VII. 772
Nitre, in oxidation of metals ..... VI. 628
Nodes in flying rope ..... VIII. 316
Nomenclature of machine details, O. Smith ..... II. 358
" for crane motions ..... IV. 208
Non-conducting engines, friction of ..... VIII. 86
" *coverings for steam pipes*, J. M. Ordway, 1st paper .. V. 73
" " " " " " 2d " .. V. 212
" " " " " " conclusion. VI. 168
" linings for engine cylinders ..... VII. 375
" " " steam " ..... VIII. 499
Non-conductors of heat, experiments on, C. E. Emery ..... II. 84
Note on expansion of steam and regulation of the steam engine, R. H. Thurston ..... II. 338
Note on helical seams in boiler making, R. H. Thurston ..... VIII. 357
" " *mineral wool as non-conductor*, F. R. Hutton ..... III. 228
" " *the economy of the windmill as a prime mover*, A. R. Wolff .. III. 299
" *relating to water-hammer in steam pipes*, R. H. Thurston ..... IV. 404
Notes for discussion on cylinder condensation and the reduction of the same by the use of the compound engine, C. E. Emery ..... VIII. 479
Notes for discussion in relation to the development of the compound engine, and the probable limit of steam pressure in marine engine boilers, C. E. Emery ..... VIII. 472
Notes on comparative values of metal surfaces for warming air, W. J. Baldwin ..... VII. 361
Notes on steel, G. C. Henning ..... IV. 410

PAGE

Notes on steel tested shortly after rolling, E. C. Felton..... IX. 38
" " *the steam stamp*. F. G. Coggin..... VI. 370
" " *warming railroad cars by steam*, W. J. Baldwin..... IX. 471
" " *the comparative loss by friction in a transmitting dynamometer*, Samuel Webber..... X. 514
Note on the steam turbine, J. B. Webb..... X. 680
Novel chimney staging, a, F. G. Coggin..... VII. 612
" *hammer-head and die*, Wm. Hewitt..... VI. 77
Novelty Iron Works experiments..... I. 184; V. 337
" " " proportions of boilers..... VI. 318
" " " curves..... X. 284
NOYE, A. A., disc., reducing section of bolts..... X. 819
Nozzle for casting-ladle..... VI. 50
" *and diverging tubes, best form of*, A. F. Nagle..... IX. 505
Number of coils in spiral springs..... IV. 347
NYSTROM, J. W., disc., upright boilers at Roxbury Pumping Station. III. 299

Objections to cast-iron fittings..... IV. 276
Occlusion of feed-pipe in steam boiler..... VII. 815
ODELL, W. H., disc., water-meter..... V. 69
" " " compound engines for manufacturing purposes. X. 82
Official *vs.* private inspection of boilers..... IV. 148
Oil-bath lubrication..... VI. 156
Oil-cup, best form of..... X. 810
Oil-pipe lines..... VII. 318
Oil-storage in manufacturing establishments..... VII. 477
Oil-tempering of steel-shafts..... VII. 524
Oil well casing..... VIII. 348
Oil well sucker-rods..... VIII. 295
Oils, lubricating, friction of, C. J. H. Woodbury..... I. 73; VI. 136
Old locomotive "Sampson," the, D. W. Robb..... X. 509
Olive oil, exportation of..... VI. 434
Oliver Bros. and Phillips' steel..... VI. 69
On the use of compound engines for manufacturing purposes, C. T. Main..... X. 48
O'Neill's valve for steam engine..... II. 349
Ordnance, progress in..... II. 433
" treatise on, A. L. Holley..... IV. 63
ORDWAY, J. M., non-conducting coverings for steam pipes, 1st paper. V. 73
" " " " " " " 2d " V. 212
" " " " " " " conclusion. VI. 168
Original Bessemer plant at Troy, R. W. Hunt..... VI. 61
Oscillation of mills..... II. 471
Otto and Langen gas engine..... VII. 700
Our coast defense, its cost and its mechanical problems, Joseph Morgan, Jr..... VIII. 582
Output in Bessemer process, 1882..... I. 138
Outward pressure of packing ring..... II. 25
Overhauling of a mechanical power, J. B. Webb..... X. 402
Overhead heating of mills..... VI. 859; IX. 108

PAGE
Oxidation of iron by CO gas..... IV. 358
" " " " SO_2 gas..... III. 230
Oxidation of metals and the Bower-Barff process, W. H. Weightman. VI. 628
Oxy-hydrogen light..... VIII. 664

Packing for differential accumulator..... VII. 383
Packing for pipe joints..... IX. 129
Packing for piston rods and valve stems, L. F. Lyne..... I. 243
Packing for S. S. Anthracite..... VIII. 476
Packing for steam stamp..... VI. 390
Packing rings of P. R. R..... IX. 95
" " friction of..... X. 392
Pad lubrication..... VI. 158
PAINTER, P., disc., natural gas..... V. 367
PALMER, G. E., disc., foundations in yielding earth..... VII. 801
" " " smoke-preventing furnace..... VII. 788
Palmer, J. D., iridium light..... VIII. 670
Palmer's post-line railroad..... VII. 123
Pantograph for high-speed engines..... X. 591
Paper-carrier for indicator..... VII. 492
Paper friction gear..... IX. 715
Parabolas for railroad curves..... VIII. 155
Parabolograph..... VIII. 150
Paraffine in steam boilers..... VI. 609
Paraffine to prevent corrosion..... IX. 430
Parallelism of girders of traveling cranes..... IV. 303
PARKER, C. H., disc., electromotors for shops..... X. 827
" " " vapors and vapor engines..... X. 665
" " " joints of boiler shells..... X. 714
" " " gain-sharing..... X. 619
PARSONS, H. DE B., the influence of sugar upon cement..... IX. 286
" " the displacement and the area curves of fish..... IX. 679
" " disc., performance of a compound engine..... IX. 548
" " " piston packing..... IX. 94
" " " river practice of the West..... IX. 658
" " " rope transmissions..... IX. 711
" " " strains in locomotive boilers..... IX. 588
" " " testing the strength of cements..... IX. 181
PARSONS, HENRY, memorial notice of..... X. 838
Parting pots of ferro-phosphor silicons..... III. 88
PARTRIDGE, W. E., capital's need for high-priced labor..... VIII. 269
" " at Holley memorial session..... III. 66
" " disc., adoption of code for boiler trials..... VI. 882
" " " belts as grain conveyers..... VI. 413
" " " boilers for warming dwelling-houses..... VI. 626
" " " Bower-Barff process..... IV. 364
" " " counterbalancing of engines..... II. 269
" " " data for steam heating..... VI. 859
" " " drawing paper..... VIII. 304
" " " engineer as an economist..... VII. 469

PAGE
PARTRIDGE, W. E., disc., engineering problems for senior students.. VIII. 332
" " " flow of metals..... VI. 669
" " " flying rope..... VIII. 320
" " " grinding-room grit..... VIII. 301
" " " mineral wool..... III. 232
" " " nomenclature of machine details..... II. 366
" " " spruce beams..... IV. 131
" " " system of cataloguing and indexing..... VI. 864
" " " technical education..... VI. 535
" " " test commission..... III. 119
" " " tubular boilers..... VI. 118
" " " water meter..... V. 70
" " " welded *vs.* riveted work..... VI. 846
Passaic river water, analysis of..... IX. 251
Patent-office, memorial to..... VI. 18
PEABODY, C. H., steam engine tests at the Mass. Inst. Tech..... VII. 328
" " a simple calorimeter..... X. 327
" " disc., identification of dry steam..... X. 379
Pemberton Mills, failure of..... III. 25
" " floor section..... II. 271
Percentage of friction in mills.....I. 113; VI. 462
" " steam from receiver..... X. 64
Perfect screw problem, practical solution of, W. A. Rogers..... .. V. 216
Performance of a 35-ton refrigerating machine of the ammonia absorption type, J. E. Denton..... X. 792
Perkins' drop-tubes..... VI. 573
" high pressure system..... VIII. 475
" marine engine..... I. 188
" steam pressures..... IV. 87
" viscosimeter..... IX. 374
Permanence of metals..... V. 250
Permanent way of railroads..... II. 554
Perry gas engine..... VII. 699
Persistent form of gear tooth, a, J. B. Webb..... IX. 398
Petroleum, crude, in steam boilers..... IX. 253
" engine..... VII. 701
" oils..... VI. 164
" in steam boilers..... X. 761
Phillips' gas in O. H. furnace..... VII. 676
Phosphor bronze for wire rope..... VIII. 321
Phosphorus in chain iron..... VIII. 711
Photographs, large and enlarged, R. H. Thurston..... IX. 696
" of steam jets..... X. 355
Phrenology as related to education..... VI. 536
Pickling of castings..... VI. 668
PICKERING, T. R., American machinery at international exhibitions. V. 113
" " disc., member of meetings..... X. 23
Piece-work in shops..... VIII. 285
" reduction in cost of..... VII. 469
" systems..... VIII. 644

PAGE
PIERCE, ——, disc., age of steam boilers..... II. 518
" " self-packing valves..... II. 501
Piles in yielding earth..... VII. 803
Pillow block for vertical engine..... IV. 370
Pipe and pipe threads, standard, Geo. M. Bond..... VII. 311
Pipe-joints for natural gas..... V. 348, 371
Pipe-thread standards, report on.....VIII. 29, 347
Piping for air in glass-works..... IX. 64
" " blowers..... IX. 60, 503
" " centrifugal pumps..... VII. 611
" " groups of wells..... IX. 324
" " of steel ingots..... X. 438
Piston for pneumatic engine..... VII. 382
" of Wyandotte engine..... VI. 55
Piston packing, a new principle in, J. E. Sweet..... IX. 91
" rings, breakage of..... IX. 93
" speed.....II. 76, 198; IV. 383
" rings, friction of..... X. 392
Planimeter, adjustment of..... VI. 498
" literature..... VI. 497
" for indicator..... IV. 186
" proportions of..... VI. 501
" *the Polar*, C. E. Emery..... VI. 496
Planing of sheared steel..... IX. 727
Plaster of Paris in Bower-Barff process..... IV. 359
" " " as non-conducting covering..... V. 108
Platinum, specific heat of, J. C. Hoadley..... III. 174
Plea for the printing press in mechanical engineering schools, a, J. T. Hawkins..... IX. 403
Plunger pumps for boilers..... VIII. 298
Pneumatic machinery, packing for..... VII. 381
" system of handling grain..... VI. 413
Pointing rods, machine for..... VIII. 566
Polar planimeter, the, C. E. Emery..... VI. 496
Pompeian baths, steam heating of..... VI. 861
POND, D. C., address of welcome at Hartford..... II. 3
Poole and Hunt CS_2 engine..... VII. 684
Pope, R. W., disc., electric welding..... X. 106
Popp, Victor, incandescent light..... VIII. 670
Poppet-valves for steam engines..... VII. 688
PORTER, C. T., Edison's steam dynamo..... III. 218
" " method of keeping mechanical drawings..... II. 560
" " strength of machine tools..... I. 119
" " at Holley memorial session..... III. 53
" " disc., another new steam engine indicator..... VII. 519
" " " an interesting indicator diagram..... IX. 298
" " " counterbalancing of engines..... II. 266
" " " cylinder condensation and the compound engine VIII. 483
" " " drawing paper..... VIII. 306
" " " efficiency of the crank..... I. 236

PAGE

PORTER, C. T., disc., expansion in single and compound engines.... I. 177
" " " expansion of steam..... II. 347
" " " friction as a factor..... I. 150
" " " friction of oils..... I. 113
" " " indicators..... V. 331
" " " methods of arranging and indexing drawings and patterns..... II. 375
" " " metric system..... I. 52
" " " most economical point of cut-off..... II. 285
" " " nomenclature of machine details..... II. 368
" " " perfect screw..... V. 252
" " " piston packing rings..... VIII. 449
" " " rules for boiler tests..... V. 276
" " " screw propulsion.....II. 461, 464
" " " standard screw threads..... I. 127
" " " steam and hot water..... VIII. 524
" " " tubular boilers..... VI. 120
" " " upright boilers at Roxbury pump station..... III. 298
" " " valve dynamometer..... VII. 638
" " " water meter..... V. 71
PORTER, H. F. J., a self-packing valve..... II. 499
" " binary absorption system of ice machinery..... II. 212
" " disc., sound castings..... VI. 109
" " " tubular boilers..... VI. 119
Porter's marine governor..... IX. 319
Positive blowers..... IX. 67
Positive speed indicator, Oberlin Smith..... V. 206
Post-line railroads.....VII. 123, 127
POTTER, CHARLES, JR., disc., the milling machine as a substitute for the planer..... IX. 265
POWEL, S. W., a system of worm-gearing of diametral pitch..... X. 333
" " disc., substitutes for steel in springs..... VII. 385
Power crane, a, W. F. Durfee..... V. 131
" " at Novelty Iron Works..... V. 138
" " " Joliet..... V. 138
Power for grain conveyers..... VII. 668
" " textile machinery..... VII. 140
Power-press problems, Oberlin Smith..... IX. 161
" required to drive a blower.....VII. 822; IX. 57, 61, 63
" *required to overcome the frictional resistance of engine and shafting in mills,* I. T. Henthorn..... VI. 461
" to drive machine tools.....VIII. 307, 627
Practical formulæ for friction valves..... IV. 162
" *methods for economy of fuel in the steam engine,* A. Stirling. I. 265
" *solution of the perfect screw problem,* W. A. Rogers..... V. 216
PRATT, F. A., disc., standard measurements..... II. 89
" " " " gauge system..... III. 129
" and Whitney standard bars..... II. 84
PRATT, N. W., disc., rules for boiler tests..... V. 269
Preliminary meeting for organization..... I. 3

PAGE

Prentiss, F. H., in trials of a warm-blast apparatus..... VI. 676
President's inaugural, 1880, R. H. Thurston..... I. 7
" *address*, Xth meeting, J. E. Sweet..... VI. 31
" " 1885, J. F. Holloway..... VII. 25
" " 1886, Coleman Sellers..... VIII. 676
" " 1887, Geo. H. Babcock..... IX. 23
" " 1888, Horace See..... X. 482
Press problems, power, Oberlin Smith..... IX. 161
Pressure of steam in marine boilers..... VIII. 472
" *obtainable by the use of the drop-press*, R. H. Thurston..... V. 53
" on castings..... VI. 104
" " lubricated surfaces..... I. 113
" per square inch on Babbitt metal..... III. 227
" " " " of crossheads..... IX. 374
" and velocities of air in blowers..... IX. 53
" allowable on journals..... VI. 856
" and speeds on journal bearings (184–2)..... VI. 849
" on journals..... VI. 154
Prevention of smoke in boilers..... I. 273
Price of steel as compared with iron..... IV. 419
Priming of water-tube boilers..... VI. 578
Principles for high-speed boats..... IV. 92
Printing-press, a plea for the, in mechanical engineering schools, J. T. Hawkins..... IX. 403
Printing, progress in..... II. 439
Problem in profit-sharing, a, William Kent..... VIII. 680
Proceedings, New York, 1880..... I. 1
" Hartford, May, 1881..... II. 1
" Altoona, 1881..... II. 233
" New York, 1881..... II. 383
" Philadelphia, 1882..... III. 1
" New York, 1882..... IV. 3
" Cleveland, 1883..... IV. 193
" New York, 1883..... V. 3
" Pittsburg, 1884..... V. 159
" New York, 1884 (Xth) meeting..... VI. 3
" Atlantic City, 1885 (XIth) meeting..... VI. 355
" Boston (XIIth) meeting..... VII. 12
" Chicago (XIIIth) meeting..... VII. 403
" New York, 1886 (XIVth) meeting..... VIII. 1
" Washington, 1887 (XVth) meeting..... VIII. 341
" Philadelphia (XVIth) meeting..... IX. 3
" Nashville (XVIIth) meeting..... IX. 349
" Scranton (XVIIIth) meeting..... X. 3
" Erie (XIXth) meeting..... X. 469
Producers for steam boilers..... VII. 795
Products-of-combustion engines..... VII. 703
Production of steel..... IV. 65, 78
Production of true crank shafts and bearings, Horace See..... VII. 521
Profit-sharing, a problem in, Wm. Kent..... VIII. 680

PAGE
Profits at fixed expansion..... III. 281
Progress in mechanical science, 1824–1882, F. Fraley..... III. 200
Projectiles, penetration of ..... VIII. 588
Projection of machine drawings..... VIII. 334
Prolonged stress on iron, effects of, R. H. Thurston..... IV. 224
Promethor by Bradley..... VII. 727
Properties of gun steel..... VIII. 594
Properties, physical, of metals and alloys, T. Egleston..... V. 140
Propontis boilers..... VI. 577, 600
Proportioning steam cylinders, R. H. Thurston..... IX. 360
Proportions of cement in beton..... IV. 391
" " L. V. locomotive..... IX. 610
Protective value of boiler inspection, F. B. Allen ..... IV. 142
Pulley-arms, strength of..... X. 224
Pulleys for rope transmissions..... IX. 703
Pumping engines, duty trials of, J. S. Coon..... IX. 476
" " geared..... II. 79
" " speed of..... I. 181 ; II. 79
Pumps, centrifugal and reciprocating, efficiency of, S. S. Webber.... VII. 598
" *centrifugal, and their efficiencies*, S. S. Webber..... IX. 228
" for collieries..... IV. 220
" " driven wells..... IX. 324
" " mills..... II. 308
" *valves, Cornish*, A. F. Nagle..... X. 521
Punched holes in steel..... IV. 417, 428
Purification of water for manufacturing and domestic purposes, T. S. Crane..... VII. 617
Push and pull springs..... IV. 345
" " " " for dynamometers ..... VII. 635
Pyrometer, calorimeter as, J. C. Hoadley..... II. 42
" water platinum..... VI. 702
Pyrometers, Siemens..... II. 53

Rack-cutter..... X. 336
Radiation from brick-work of boiler setting..... VI. 808
RAE, T. W., latest method in submarine telegraph work..... II. 349
" " mechanism employed in multiplex telegraphy..... IV. 321
Rail cambering arrangement, Lackawanna I. & C. Co., W. K. Seaman..... IV. 106
Railroad bed for bridge structures, O. C. Woolson..... IX. 276
" *cars, notes on warming by steam*, W. J. Baldwin ..... IX. 471
" engineering, progress in..... II. 423
" permanent way of..... II. 544
" structures, protection of..... II. 524
" water stations, windmills for..... III. 307
Railway economics, S. W. Robinson..... II. 524
RAMSAY, H. A., what are the needs of our navy?..... VIII. 574
Ramsbottom's packing rings..... VIII. 449
RANDOLPH, L. S., strains in locomotive boilers..... IX. 534
" " disc., a short way to keep time and cost..... IX. 386

PAGE
RANDOLPH, L. S., disc., sound casting ..... VI. 103
" " " strains in boiler stays..... VIII. 720
Rankine's belt formula..... VIII. 561
" diagram of efficiency..... III. 260
" fan..... IX. 232
" *theorem of economy of single acting engines*, W. P. Trowbridge..... III. 236
Rapid transit and elevated railroads, F. E. Galloupe..... VII. 81
Rarefied air for fans..... VIII. 314
Rating of boilers by horse-powers for commercial purposes, Trowbridge-Richards..... VII. 214
Ratio of expansion at maximum efficiency, R. H. Thurston..... II. 128
Rational system of piston packing, S. W. Robinson..... II. 19
Ratios of cylinders in triple expansion engines, J. M. Whitham..... X. 576
RAYMOND, R. W., Holley memorial address..... IV. 85
RAYNAL, A. H., disc., divergencies in flange diameters..... IX. 131
" " " flying-rope..... VIII. 317
" " " lining for brake straps..... IX. 331
" " " power for machine tools..... VIII. 312
" " " wrought-iron scrap in castings..... IX. 341
Raw-hide belt, tests of..... VIII. 546
" belting..... VII. 556
" on contact surfaces..... VI. 849
Reaction of water on mineral wool.....II. 39; III. 229
Reamed holes in steel.....IV. 418, 428
Reaming of punched steel..... IX. 727
Receiver, effect of..... IX. 549
" of compound engine..... I. 178
" engine, wire-drawing in..... I. 174
Recent improvements in drawing boards, T. W. Bergner..... VI. 224
" " " *dredging machinery*, A. Wells Robinson..... VIII. 114
Reciprocating parts of high-speed engines, formulæ for, G. I. Alden .. VIII. 191
" counterbalancing of..... II. 243
" for high speeds..... II. 75
" weight of.....I. 151; II. 268
Reckenzaun and Redfield patents for incandescent lighting..... VIII. 671
Recommendations for pipe-fittings..... IV. 276
Record blank for indicator diagram..... IX. 297
Reducing sections of bolts..... X. 818
Re-enforced beton for engine foundations..... IV. 395
Re-entrant angles, avoidance of..... IX. 540
REESE, JACOB, regenerating metallurgic furnaces..... I. 57
" " rolled cast-steel car-wheels..... II. 293
" " disc., a plea for the printing press in engineering schools..... IX. 411
" " " automatic regulator for heating apparatus ..... IX. 440
" " " electro-plating of steel..... IX. 715
" " " inserting and securing crank pins..... IX. 450
" " " natural gas..... V. 364
" " " perfect screw..... V. 245

PAGE

REESE, JACOB, disc., punched and sheared edges of steel..... IX. 732
" " " rolling of steel..... IX. 45
" " " strains in locomotive boilers..... IX. 541
" " " wire rope fastenings..... IX. 678
Reference literature..... II. 69
Refreshment of metals..... III. 89, 97
Refrigerating machine, performance of, J. E. Denton..... X. 792
Regenerating metallurgic furnaces, J. Reese..... I. 57
Regenerator in air engines..... VII. 725
Regulation of steam engines, note on, R. H. Thurston..... II. 338
" " pressure in receiver of compound engine ..... X. 48
" " receiver pressure..... X. 69
Regulator, automatic, for heating apparatus, J. T. Hawkins..... IX. 431
Reheating in receiver engine..... I. 178
Relation between velocity and pressure of wind..... III. 305
" of employers to employed..... IV. 96
Relative areas of cylinders in compound engines..... X. 48
Relative economy of ventilation by heated chimneys and by fans, W. P. Trowbridge ..... VII. 531
Relative efficiency of centrifugal and reciprocating pumps, S. S. Webber..... VII. 598
Relative value of water gas and Siemens gas for melting in the O. H. furnace, F. W. Taylor..... VII. 669
Reloading and stocking coal, I. M. Dodge..... IX. 270
Remarks on Bessemer ingot cranes, G. Curtis..... IV. 239
Repairs of blowers..... IX. 66
Repeated stress on iron.....VIII. 169, 174
Repertorium, Schuberth-Carl..... II. 67
Report of a committee on a standard method of steam boiler trials..... VI. 256
" " *a series of trials of a warm-blast apparatus*, J. T. Hoadley. VI. 676
Report of committee on finance (XIIth meeting)..... VII. 9
" " " ..... VIII. 9
" " " ..... IX. 11
" " gauges and standards ..... IV. 21
" " Holley memorial.....III. 9; IV. 10; V. 15
" " memorial to patent-office..... VI. 27
" " library, Xth meeting..... VI. 11
" " " XIth " ..... VI. 362
" " " ..... VII. 13
" " " ..... VIII. 11
" " " ..... IX. 12
" " standard pipe threads.....VII. 413; VIII. 29, 347
" " U. S. test commission....VI. 13; VII. 413; VIII. 16
" uniform methods of tests .....VII. 21, 413; IX. 15
" " U. S. commission to test materials III. 16, 80; IV. 29; V. 9
" council, 1882 ..... IV. 7
" " June, 1883 ..... IV. 198
" " Nov., 1883 ..... V. 7
" " May, 1884..... V. 162

PAGE
Report of council, Xth meeting ..... VI. 7
" " XIth " ..... VI. 359
" " ..... VIII. 6, 349
" " ..... IX. 8
" tellers, May, 1881 ..... II. 9
" " Nov., 1881 ..... II. 398
" " April, 1882 ..... III. 8
" " Nov., 1882 ..... IV. 18
" " June, 1883 ..... IV. 200
" " Nov., 1883 ..... V. 21
" " May, 1884 ..... V. 165
" " ..... VI. 14
" " ..... VI. 360
" " ..... VII. 7, 17
" " ..... VII. 411
" " ..... VIII. 7, 18, 351
" Secretary, 1880 ..... I. 3
" " 1881 ..... II. 387
" Treasurer, 1880 ..... I. 5
" " May, 1881 ..... II. 5
" " Nov., 1881 ..... II. 399
" " Nov., 1882 ..... IV. 7
" " June, 1883 ..... IV. 201
" " Nov., 1883 ..... V. 7
" " May, 1884 ..... V. 163
" " Xth meeting ..... VI. 9
" " XIth " ..... VI. 361
" *on natural gas*, appendix ..... V. 340
" on revision of rules ..... V. 16, 164
" *of test on upright boilers at Roxbury Pumping Sta.*, J. S. Coon III. 290
Resignation of treasurer ..... II. 401
Resistance to boats from shallow water ..... IX. 658
Resistances, Meigs Elev. R. R. ..... VII. 112
Resolution on metric system ..... I. 54
" " adopted ..... II. 9
Resolutions of thanks, Nov., 1881 ..... II. 411
" " April, 1882 ..... III. 21
" " Nov., 1882 ..... IV. 33
" " June, 1883 ..... IV. 207
" " Nov., 1883 ..... V. 31
" " May, 1884 ..... V. 171
" " to R. W. Raymond ..... VI. 5
" " (Xth meeting) ..... VI. 28
" " (XIIth meeting) ..... VII. 22
" " (XIIIth ") ..... VII 419
" " ..... VIII. 23, 356
" " ..... IX. 19, 356
Resolution on death of Peter Cooper ..... IV. 199
" on test commission of Engineers' Society of Western Pa. III. 107
Result of a test of a warm-blast apparatus at the Pacific Mills... VI. 732 *et seq.*

PAGE
Resuscitation after suffocation by gas ..... VII. 730
REULEAUX, F., friction in toothed gearing ..... VIII. 45
Reuleaux's kinematic models, J. B. Webb (abstract) ..... IV. 367
Revision of rules ..... IV. 15, 199 ; V. 16, 164
Reynold's valves ..... X. 535
RICHARDS, C. B., rating of boilers by horse-power for commercial purposes ..... VII. 214
" " disc., Trenton rod-mill ..... II. 75
" F. H., " calculating machines ..... VIII. 708
" " " different kinds of belting ..... VIII. 561
" " " tubes from solid bars ..... VIII. 570
" " " spiral springs ..... IV. 344
" " " working pressure of gear teeth ..... VIII. 701
" " " size of tap drills ..... X. 464
" " " phenomena of steel ..... X. 450
Rider compression engine ..... VII. 710
" " " performance of ..... VII. 736
RIDGWAY, J. T., disc., kerosene oil in steam boilers ..... IX. 253
Rifling of gun barrels ..... X. 448
Riley, W. A., engine tests ..... VIII. 92
Ritchie's torsion balance ..... VI. 638
River practice of the West ..... IX. 645
Rivet areas ..... VIII. 165, 168
" holes in steel plates ..... IV. 430
Riveted structures, strains in ..... VIII. 165
" *vs.* welded work in boilers (184-1) ..... VI. 843
Riveting of boiler seams ..... VI. 120
" *vs.* pin connections ..... III. 109
ROBB, D. W., the old locomotive, "Sampson" ..... X. 509
ROBERTS, T. P., disc., natural gas ..... V. 363
ROBINSON, A. WELLS, motion curves for cut-off valves ..... V. 34
" " recent improvements in dredging machinery .. VIII. 114
" " process for driven wells ..... IX. 328
" S. W., efficiency of the crank ..... I. 221
" " cushion adjustment in engines ..... I. 255
" " rational system of piston packing ..... II. 19
" " counterbalancing of engines ..... II. 243
" " railroad economics ..... II. 524
" " thermodynamics of Worthington compound engine III. 130
" " back pressure on valves ..... IV. 150
" " disc., arranging and indexing drawings and patterns ..... II. 375
" " " cambering arrangement, Lackawanna I. & C. Co ..... IV. 117
" " " expansion in single and compound engine ... I. 174
" " " friction as a factor ..... I. 150
" " indicators ..... V. 333
" " " most economical point of cut-off ..... II. 286
" " " note on expansion of steam ..... II. 344
" " " power to drive a blower ..... VII. 825

PAGE
ROBINSON, S. W., disc., perfect screw..... V. 250
" " " screw propulsion .....II. 462, 467
" " " spiral springs..... IV. 340
" " " standard gauge system..... III. 128
" " " training of a dynamic engineer..... VII. 774
" " " upright boilers at Roxbury pump. station... III. 299
Rock drill, a new, F. A. Halsey..... VI. 71
Rodman castings..... VIII. 595
" guns, strains in..... VI. 668
Rod mill of Trenton Iron Co., W. Hewitt..... II. 70
Roeder, F., inventor of torsion balance..... VI. 636
Rogers and Black steam and flue-gas engine..... VII. 692
ROGERS, W. A., practical solution of the perfect screw problem..... V. 216
" " the microscope in the workshop..... VII. 164
" " disc., a new steam calorimeter..... VII. 188
" " " the unexpected which often happens..... VII. 157
" W. S., " electro-plating of steel..... IX. 724
" " " large blue prints..... IX. 700
" " " river practice of the West..... IX. 657
" " " compound engines for manufacturing purposes X. 84
" " " number of meetings..... X. 24
Roll trains for basic steel..... VII. 71
Rolled cast-steel car-wheels, J. Reese..... II. 293
Roller bushing for journals..... IX. 329
" mills, replacing stones..... IV. 83
" spinning of metals..... VI. 672
Rolling mill, first in America, W. H. Harrison..... II. 103
ROOT, JNO. B., memorial of..... VIII. 726
" " new method of screw propulsion..... II. 442
" " disc., adoption of code for boiler trials..... VI. 879
" " " age of steam boilers..... II. 520
" " " beton as building material..... IV. 402
" " " Bower-Barff process..... IV. 365
" " " economy of wind-mill..... III. 306
" " " report of committee on steam boiler trials.....VI. 320, 328
" " " welded *vs.* riveted work..... VI. 843
Rope fastenings, wire, Wm. Hewitt..... IX. 671
" for transmission of power..... VIII. 315
" transmissions, design of..... IX. 708
" walk transmissions ..... VIII. 322
Roper's products-of-combustion engine..... VII. 703
Rosenkranz attachment to indicator..... VII. 498
Ross, Andrew, dividing engine..... V. 256
Rotation, sliding friction of, R. H. Thurston..... VI. 122
Rowan's water-tube boilers..... VI. 577
Roxbury pumping station, test of upright boiler at, J. S. Coon..... III. 290
Rubber belt, tests of..... VIII. 545
" belts in grain elevators..... VI. 412
" packing for pneumatic engines..... VII. 381
Rudders for stern wheel steamboats..... IX. 650

PAGE
Rules of Council for regulating debate.....VII. 408, 419
" for boiler tests, code of..... VI. 267
" " *conducting boiler tests*, W. Kent..... V. 260
Rush, experiments on..... VIII. 474
Russian system of shop education..... VI. 526
Rustless iron, the Bower-Barff process for producing, G. W. Maynard IV. 351
RUTHERFORD, L. H., should a piston packing ring be of the same thickness at every point?..... VIII. 439
" " the strains in an annular lid resisting internal pressure..... X. 32

Saarbruck experiments..... VI. 568
SACK, HUGO, method of blue printing..... IX. 699
Safety car-heating system, a, H. R. Towne..... IX. 453
" valve for vessels..... VIII. 716
" " with loose bushing..... VII. 161
Sales of U. S. bonds..... IV. 8
Salisbury iron for soft castings..... IX. 339
Salomon's CS_2 engine..... VII. 683
Sand-blast for drilling glass..... VII. 393
" process for files..... VIII. 324
Sand in driven wells..... IX. 325
SANDERSON, R. P. C., disc., crystallization of iron..... VII. 260
Sandy Hook experiments..... VI. 218
SANGUINETTI, PERCY A., on the divergencies in flange diameters of pumps, valves, etc..... IX. 124
" " disc., conicograph..... VIII. 155
" " " corrosion of aluminium bronze..... VIII. 336
" " " engineering problems for senior students..... VIII. 334
" " " flying rope..... VIII. 321
" " " thin templets..... VIII. 296
Sargent's Elevated R. R..... VII. 124
Saturated vapors..... X. 670
Saturation of air..... VIII. 425
Savings sharing..... VIII. 645
Sawing thin templets..... VIII. 296
Saybolt's viscosimeters..... IX. 370
SCHEFFLER, F. A., a foundry cupola experience.....IX. 496; X. 89
" " new method of constructing tubular boilers..... VI. 110
" " disc., condensation in exhaust-pipe..... VII. 818
" " " joints of boiler shells..... X. 717
" " " lubrication..... X. 811
Scheme of industrial organization..... IV. 99
School for superintendents..... VI. 527
" " manual training..... VI. 527
" " mechanical engineers..... VI. 526
School-shop *vs.* Shop-school..... VII. 761
SCHUHMANN, GEO., disc., condensation in exhaust-pipe..... VII. 821
" " " culm-burning..... VII. 391

PAGE

SCHUMANN, GEO., disc., experiments with blowers ..... IX. 68
" " " frictional resistance of shafting ..... VII. 147
" " " relative value of Siemens' and water-gas .. VII. 667
" " " sliding friction of rotation ..... VI. 159
" " " standard pipe and pipe threads ..... VII. 320
" " " substitutes for steam ..... VII. 727
" " " true crank shafts and bearings ..... VII. 529
" " " tubes from solid bars ..... VIII. 568
" " " valve dynamometer ..... VII. 641
" " " water-gas ..... VIII. 232
" " " variable load, speed, and engine friction ... X. 182
" " " friction of piston packing-rings ..... X. 395
Scotch iron in mixtures ..... VI. 108
SCOTT, OLIN, disc., a problem in profit-sharing, and the labor question VIII. 652
" " " balanced vertical engine ..... IV. 382
" " " calculating machines ..... VIII. 708
" " " different kinds of belting ..... VIII. 554
" " " smoke in blacksmith shops ..... VIII. 698
SCRANTON, W. H., memorial notice of ..... X. 834
Scraped fit of journals ..... VI. 851
Screw perfect, practical solution for, W. A. Rogers ..... V. 216
" *propulsion, improved method of*, J. B. Root ..... II. 442 ; IV. 94
Screws, standard ..... V. 220
" " for lathes ..... V. 236, 241. 249
" *threads, standard sizes for*, G. R. Stetson ..... I. 123
" " in R. R. work ..... I. 128
SEAMAN, W. K., rail cambering arrangement, Lackawanna I. and C. Co. ..... IV. 106
Seamless boilers ..... VI. 843
Seams, helical, in boiler-making, R. H. Thurston ..... VIII. 357
Seasoning of castings ..... VI. 667
Secondary batteries ..... IV. 85
Section lining, standard, F. Van Vleck ..... IX. 107
Sectional boilers ..... IV. 91 ; VI. 221
SEE, HORACE, built-up work in engine construction ..... III. 195
" " the production of true crank shafts and bearings ..... VII. 521
" " president's address, 1888 ..... X. 482
" " disc., a plea for the printing press in engineering schools ..... IX. 412
" " " estimating the cost of foundry work ..... IX. 396
" " " improvements in ferry-boats ..... VII. 202
" " " performance of a compound engine ..... IX. 550
" " " punched and sheared edges of steel ..... IX. 734
" " " river practice of the West ..... IX. 659
" " " rope transmissions ..... IX. 709
" " " shell and water-tube boilers ..... VI. 581
" " " strains in locomotive boilers ..... IX. 541
" " " Strong locomotive ..... IX. 633
SEE, JAS. W., standards ..... X. 543
Self-packing valve, a, H. F. J. Porter ..... II. 499

PAGE
SELLERS, COLEMAN, president's address, 1886 .... VIII. 676
" " " letter to XIIIth meeting .... VIII. 403
" " experiments on the transmission of power by belting .... VII. 549
" " experiments on the transmission of power by gearing .... VII. 273
" " metric system .... I. 29
" " introduction to essay on mechanical progress .... III. 199
" " at Holley memorial session .... III. 60
" " disc., strength of machine tools .... I. 121
" " " standard screw threads .... I. 127
Self-oiling boxes .... X. 810
SELLON, J. S., incandescent light .... VIII. 672
Sensitiveness of torsion balance .... VI. 641
Service cards in shop-order system .... VII. 450
Set screws, fitting of .... IX. 333
" " holding power of .... X. 224
Setting of boilers in Pacific Mills .... VI. 685
Settling of buildings in yielding earth .... VII. 798
Several efficiencies of steam engine, the, R. H. Thurston .... III. 245
Sewing-machine needles .... VII. 267
Shaft, hollow and flexible, for marine engines .... VII. 523
Shafting, both twisted and bent .... VIII. 130
" hangers for .... VI. 461
" in rolling-mill tables .... VIII. 139
" safe loads for .... VI. 474
" speed of .... VI. 461; VII. 146
" without pulleys .... VII. 147
Shake of high-speed engines .... VII. 154
Shanks of twist drills .... VII. 133
Shaw locomotive .... II. 276, 277
" product-of-combustion engine .... VII. 702
Shaw's nozzle .... IX. 505
Shearing thin templets .... VIII. 296
Sheet-iron diaphragms in flues .... III. 76
Shell and water-tube boilers, A. Stirling .... VI. 566
SHERIFFS, JAMES, memorial of .... VIII. 729
Shippee combined harvester .... VII. 656
Shocks, repeated .... VIII. 173
Shop-order system of accounts, the, Henry Metcalfe .... VII. 440
" " system of S. M. Co. .... VII. 472
" " tickets .... VII. 446
" work at Washington University .... VII. 744
Short sheets in high pressure boilers .... VI. 847
" *way to keep time and cost, a*, H. L. Binsse .... IX. 380
Shovel, steam .... IX. 515
Should a piston packing ring be of the same thickness at every point? L. H. Rutherford .... VIII. 439
Shrinkage allowance .... IX. 448
" of cast iron .... VI. 103

PAGE
Shrinkage of tires ..... IX. 449; X. 452
" rings for guns ..... VIII. 596
" of steel in hardening ..... X. 437, 452
Sibley College post-graduate course ..... VII. 764
Siemens' compression engine ..... VII. 709
" furnace in brass manufacture ..... V. 149
" gas, analysis of ..... VIII. 229
" gas for melting in O. N. furnace ..... VII. 669
" pyrometer ..... II. 53
Silicon in steel ..... IX. 735
" " steel car wheels ..... II. 298
Silk manufacture, progress in ..... II. 422
Silver's governor ..... IX. 311
Simple calorimeter, a, C. H. Peabody ..... X. 327
SINCLAIR, ANGUS, disc., load on tires ..... VII. 787
" " " piston packing ..... IX. 94
" " " training of a dynamic engineer ..... VII. 771
Single-acting pumps for driven wells ..... IX. 326
" and compound engine, relative economy of ..... I. 22
Sizes of chimneys, table of, Wm. Kent ..... VI. 81
Slags in basic Bessemer process ..... VII. 68
Sliding friction of rotation, theory of, R. H. Thurston ..... VI. 122
Slip of belts ..... VI. 477
" " belting ..... VII. 348, 550
" " locomotive drivers ..... VII. 787
Sloane, Samuel, inventor of pipe-thawing apparatus ..... VIII. 524
SMITH, C. A., improved method of finding the diameters of cone and step pulleys ..... X. 269
" " disc., friction in gearing ..... VIII. 80
" " intuition in machine-designing ..... VIII. 464
Smith, C., Shaler's formula for load on tires and rollers ..... VII. 786
SMITH, JESSE M., disc., annular jet for ejector ..... VII. 804
" " " " valve dynamometer ..... VII. 644
SMITH, OBERLIN, experimental mechanics ..... II. 55
" " intrinsic value of special tools ..... VIII. 258
" " inventory valuation of machinery plant ..... VII. 433
" " nomenclature of machine details ..... II. 358
" " positive speed indicator ..... V. 206
" " power press problems ..... IX. 161
" " spiral springs ..... IV. 335
" " disc., adoption of code for boiler trials ..... VI. 863
" " " arranging and indexing drawings and patterns ..... II. 377
" " " belts as grain conveyers ..... VI. 412
" " " Bower-Barff process ..... IV. 363
" " " calorimeter as pyrometer ..... II. 54
" " " capital's need for high-priced labor ..... VIII. 288
" " " casting of aluminium bronze ..... VIII. 251
" " " coast defense ..... VIII. 612
" " " counterbalancing of engines ..... II. 276

PAGE

SMITH, OBERLIN, disc., cranes..... IV. 308
" " " crystallization of iron..... VII. 268
" " " drawing-paper..... VIII. 301
" " " drilling holes in glass..... VII. 393
" " " driven wells..... IX. 329
" " " drop press..... V. 59
" " " Edison's steam dynamo..... III. 226
" " " engineer as an economist..... VII. 479
" " " experiments on belting..... VII. 585
" " " flow of metals..... VI. 670
" " " foundations in yielding earth..... VII. 802
" " " frictional resistance of shafting..... VII. 146
" " " helical springs..... V. 184
" " " load on tires..... VII. 788
" " " locks and their failings..... VI. 254
" " " manufacture of cotton-seed oil..... VI. 435
" " " new form of indicator..... IV. 186
" " " non-conducting coverings..... V. 109
" " " perfect screw..... V. 236, 254
" " " piston packing..... IX. 94
" " " pressures and speeds of journal bearings..... VI. 850
" " " properties of metals and alloys..... V. 147
" " " recent improvements in drawing-boards..... VI. 232
" " " screw propulsion..... II. 463
" " " shop-order system of accounts..... VII. 480
" " " standard measurements..... II. 89
" " " standard pipe report..... VIII. 40
" " " steam stamp..... VI. 397
" " " steel springs..... VI. 866
" " " strain in hardened steel..... VII. 397
" " " system of cataloguing and indexing..... VI. 865
" " " technical education..... VI. 540
" " " sizes of tap-drills..... X.
" " " phenomena of steel..... X. 442
" " " bits of engine-room experience..... X. 703
" " " test commission..... III. 104
" " " the unexpected which often happens..... VII. 160
" " " thin templets..... VIII. 296
" " " training of a dynamic engineer..... VII. 769
" " " true crank shafts and bearings..... VII. 528
" " " twist drills..... VII. 136
" " " water meter..... V. 68
" " " welded *vs.* riveted work..... VI. 848
" " " standards..... X. 567
" " " overhauling of a mechanic power..... X. 419
" " " the identification of dry steam..... X. 381
" " " electric welding..... X. 104
" SCOTT A., tractive force of leather belts on pulley-faces..... X. 765
" " " disc., central support for Corliss engines..... X. 830
" " " " lubrication..... X. 813

PAGE
Smoke-flues, descending ..... VII. 388
" prevention ..... I. 273
" " in boiler furnaces ..... VII. 788
" box vacuum ..... X. 695
SNELL, H. I., an economical method of heating and ventilating an office and warehouse building ..... IX. 99
" " experiments and experiences with blowers ..... IX. 51
" " disc., a foundry cupola experience ..... IX. 499 ; X. 90
" " " power to drive a boiler ..... VII. 822
" " " Strong locomotive ..... IX. 633
Soaking-pits in basic Bessemer process ..... VII. 78
Soap as lubricant ..... IV. 272
Sockets for pipe-joints. *See* couplings.
" " wire rope ..... IX. 671
Soft castings ..... IX. 337
Solano ferry-boat ..... VII. 659
Soldering of wire-rope sockets ..... IX. 677
Solid carbon and ash in flue-gases ..... VI. 829
Solution of problems for actual engines ..... III. 270
" *practical, of perfect screw problem*, W. A. Rogers ..... V. 216
Some notes on the working stress of iron and steel, Benjamin Baker ..... VIII. 157
" *properties of ammonia*, De Volson Wood ..... X. 627
" " " *vapor and vapor engines*, De Volson Wood ..... X. 648
" *tests of the strength of cast iron*, Gaetano Lanza ..... X. 187
SONDERICKER, JEROME (GAETANO LANZA), an investigation as to how to test the strength of cements ..... IX. 172
SOULE, R. H., disc., domes on locomotive boilers ..... VII. 386
Sound casting, Thos. D. West ..... VI. 94
Southfield, the, dimensions of S. S ..... VII. 190
SPANGLER, H. W., disc., cylinder ratios of triple expansion engines. X. 582
" " " steam consumption of engines ..... X. 758
Special fittings for large pipe ..... IV. 283
" tools, intrinsic value of ..... VIII. 258
Specialists in manufacturing ..... VIII. 677
Specific heat of platinum, J. C. Hoadley ..... III. 174
Specifications for steam boilers ..... IV. 430
" " Western steamboats ..... IX. 649
Speed and load affecting friction of engines ..... X. 138
" " pressure of journal bearings (184–2) ..... VI. 849
" *indicator, positive*, Oberlin Smith ..... V. 206
" of belts ..... VII. 582
" " belting, limit of ..... VI. 863
" " cable in rope transmissions ..... IX. 703
" " cams for engine-valves ..... VII. 784
" " compound engine ..... I. 170
" " feeds in automatic tools ..... VII. 484
" " mills ..... II. 421
Speed of pitch line of toothed gear (184–4) ..... VI. 862
" " revolution affecting cylinder condensation ..... VII. 397
" " revolution, affecting economy ..... II. 198

PAGE
Speed of steam vessels..... IV. 91
Speed recorder, an electric, G. H. Barrus..... IX. 377
Spezzia tests of armor.....VIII. 598, 604
Spherical pins for engine-cranks..... VII. 528
Spiral conveyers for grain..... VI. 412
" gearing, experiments on..... VII. 287
" groves avoided on rope drums..... IV. 307
" lining for chimney-stacks..... VII. 615
" *springs, compressible and tensile*, Oberlin Smith..... IV. 335
" " formulæ for.....IV. 341; V. 175
" " in Corliss pumps..... IV. 349
" " limit of extension in..... IV. 347
" " number of coils in..... IV. 348
Splices in rope transmissions..... IX. 710
" of flying rope..... VIII. 319
Spooling lathe..... VII. 583
SPRAGUE, W. W., disc., lubrication..... X. 811
" " " the distribution of steam in the Strong locomotive..... X. 291
Spring packing rings..... VIII. 439
" safety valves..... VIII. 717
SPRINGER, A., inventor of torsion-balance..... VI. 637
Springer eye-bars..... IV. 413
Springs for motors..... VI. 869
Fractures of..... VIII. 167
Springs, helical, J. W. Cloud..... V. 173
" *spiral, compressible and tensile*, Oberlin Smith..... IV. 335
Sprinklers for fire protection..... II. 326
Spruce beams, strength and stiffness of large, G. Lanza..... IV. 191
Spruce for drawing-boards..... VI. 230
Spur-gear for elevator engines..... VIII. 84
Spur versus worm gear for cranes..... IV. 302
Square shaft versus wire rope for traveling-cranes..... IV. 304
Stamp, notes on the steam, F. G. Coggin..... VI. 370
Standard bars, P. & W. Co..... II. 84
" " W. A. Rogers..... II. 87
" *cast-iron fittings*, W. J. Baldwin..... IV. 274
" dimensions for tools..... IV. 80
" gauges, Betts Machine Co..... II. 89
" *gauge system*, G. M. Bond..... III. 122
" inches compared..... VII. 176
" *measurements*, G. M. Bond..... II. 80
" of length..... II. 80
" *pipe and pipe threads*..... VII. 311
" " " " committee on.....VII. 20, 414
" *section lining*, F. Van Vleck..... IX. 107
" sizes for bridges..... VIII. 683
" *sizes of screw-threads*, G. R. Stetson..... I. 123
" sugar solution..... IX. 291
" taper for pipe-taps..... IV. 285

PAGE
Standards, Jas. W. See ..... X. 542
" usual in cast-iron fittings ..... IV. 282
" committee on ..... X. 479, 575
Star lamp ..... VIII. 673
Stark's multiplex telegraphy ..... IV. 327
Stationary converter at Wyandotte ..... VI. 49
Statistics of iron and steel for 1880 in U. S. ..... III. 84
Stay bolts, fracture of ..... IX. 535
Stays in marine boilers ..... VIII. 717
Steam and hot water for transmitting heat and power, C. E. Emery .. VIII. 512
" " *power; the commercial determination of costs*, H. R. Towne ..... VIII. 637
" boilers. *See* boilers .....
" *boilers as magazines of explosive energy*, R. H. Thurston ..... VI. 199
" chest diagram ..... IX. 296
" consumption report ..... VIII. 623
" *cylinders, proportioning of*, R. H. Thurston ..... IX. 360
" discharged by nozzle ..... VIII. 327
" engine (see engine).
" " practice, progress in ..... IV. 87
" " stationary, efficiency of ..... II. 424
" " *tests at the Mass. Inst. Tech.*, C. H. Peabody ..... VII. 328
" " *the several efficiencies of the*, R. H. Thurston ..... II. 245
" hammer piston-rods ..... X. 820
" *and water power, comparative cost of*, C. H. Manning ..... X. 499
" *excavators*, W. L. Clements ..... IX. 515
" for elevator engines ..... V. 289
" " factory engines ..... V. 292
" " heating ..... V. 291
" " jets ..... V. 295
" " pumps ..... V. 294
" heating, data for (184-3) ..... VI. 857
" heating for cars ..... IX. 462
" in Bower-Barff process ..... IV. 356
" jacket, efficiency of ..... I. 175, 190
" jackets, condensation in ..... II. 198
" " economy of ..... IX. 554
" jet for chimney, location of ..... VII. 806
" *pipes, water-hammer in*, R. H. Thurston ..... IV. 404
" *piston-packing, a new principle in*, J. E. Sweet ..... IX. 91
" pressure for maximum economy ..... IV. 88
" pressure, limit of ..... VI. 572
" " usual ..... V. 269
" pumps in mines ..... IV. 222
" *stamp, notes on*, F. G. Coggin ..... VI. 370
" superheated, flow of, through orifice ..... VII. 182
" *turbine, note on the*, J. B. Webb ..... X. 680
Steamboat cam, brief treatise on, L. Johnson ..... II. 122
STEARNS, ALBERT, a method of evaporating by exhaust steam ..... VIII. 421
Stearns' multiplex telegraphy ..... IV. 327

PAGE
Steel bearings ..... VI. 853
" bridges ..... IV. 410
" brittle under impact ..... IX. 152
" by compression ..... IV. 79
" *car axles*, John Coffin ..... IX. 135
" castings for engines ..... II. 116
" " from Terre Noire ..... II. 125
" " moulds for ..... VII. 427; IX. 342
" chemical and physical properties of ..... VIII. 684
" effect of blue heat on ..... IX. 47
" effect of electroplating on ..... IX. 715
" eye-bars ..... IV. 411
" for boilers ..... VIII. 477, 496, 498; X. 439
" hammering ..... VII. 249
" in welding ..... VI. 844
" liquation of ..... VII. 250
" mechanical treatment of ..... VII. 252
" mild ..... VIII. 168
" molecular structure of ..... IX. 45
" *Notes on*, G. C. Henning ..... IV. 410
" *plant at Troy*, R. W. Hunt ..... VI. 61
" pliable condition of ..... IX. 157
" produced by open hearth process ..... IV. 78
" replacing iron ..... IV. 77
" seasoning of ..... IX. 42
" specifications ..... VI. 110, 115
" springs, speed of ..... VI. 866
" stay bolts ..... IX. 542
" *tests of, shortly after rolling*, E. C. Felton ..... IX. 38
" *vs.* iron forgings ..... III. 197
" working stress of ..... VIII. 157
" *works at Wyandotte, account of*, W. F. Durfee ..... VI. 40
" phenomena ..... X. 431
" for head shafts ..... X. 435
" case-hardening of ..... X. 823
Step bearing for vertical shaft ..... VI. 851
Step-bearings, friction of ..... VII. 305
Step pulleys, diameters of ..... X. 269
STETSON, G. R., standard sizes for screw threads ..... I. 123
" " disc., crystallization of iron ..... VII. 267
" " " drilling holes in glass ..... VII. 395
" " " friction of lubricating oils ..... I. 116
" " " metric system ..... I. 51
" " " molecular strains in steel ..... IX. 719
" " " sound casting ..... VI. 104
" " " standard pipe and pipe threads ..... VII. 324
" " " strain in hardened steel ..... VII. 397
" " " substitutes for steel in springs ..... VII. 385
" " " twist drills ..... VII. 133
" " " phenomena of steel ..... X. 435

PAGE
Stern wheel steamboats ..... IX. 647
Stevens, J. C., water-tube boilers ..... VI. 566
Stiffness of mill floors ..... II. 485
STILES, H. C., disc., power-press problems ..... IX. 170
STIRLING, A., practical methods for economy of fuel in steam engine. I. 265
" " shell and water-tube boilers ..... VI. 566
" " disc., a problem in profit-sharing ..... VIII. 646, 661
" " " Bessemer plant at Troy ..... VI. 67
" " " counterbalancing of engines ..... II. 277
" " " cylinder condensation and the compound engine. VIII. 498
" " " expansion of steam ..... II. 344
" " " experimental mechanics ..... II. 67
" " " experiments on non-conducting coverings ..... II. 39
" " " flying rope ..... VIII. 315
" " " friction in gearing ..... VIII. 85
" " " friction of oils ..... I. 113
" " " most economical point of cut-off ..... II. 194
" " " packing for rods and stems ..... I. 250
" " " screw threads ..... I. 127
" " " shell and water-tube boilers ..... VI. 614
" " " smoke in blacksmith shops ..... VIII. 697
" " " standard pipe report ..... VIII. 41
" " " strains in boiler stays ..... VIII. 717
" " " the needs of our navy ..... VIII. 580
" " " the "Superior" ..... II. 114
" " " Trenton rod-mill ..... II. 74. 77
" " " tubes from solid bars ..... VIII. 569
" " " tubular boilers ..... VI. 114
" " " veneer cutters ..... VIII. 438
" " " working pressure of gear teeth ..... VIII. 701
Stirling castings ..... IX. 341
Stirling's air engine ..... VII. 704
STILLMAN, F. H., disc., tubes from solid bars ..... VIII. 567
Stocking and reloading coal, J. M. Dodge ..... IX. 270
Stop motion for power-presses ..... IX. 166
Storms' cloud engine ..... VII. 690
Straight line engine balance ..... IV. 386
Straightening rails ..... IV. 106
Strain, eccentric, effect of ..... IX. 178, 181
Strainer for water tank ..... VII. 629
Strains in an annular lid, L. H. Rutherford ..... X. 18
Strains in boilers ..... VI. 118
" " boiler stays ..... VIII. 717
" " *locomotive boilers*, L. S. Randolph ..... IX. 534
STRATTON, E. P., disc., nomenclature of machine details ..... II. 365
" " " adoption of code for boiler trials ..... VI. 890
" " " belts as grain conveyers ..... VI. 412
" " " flow of metals ..... VI. 670
" " " improvements in ferry-boats ..... VII. 208
" " " pressures and speeds of journal bearings ..... VI. 854

PAGE
STRATTON, E. P., disc., safety valve for vessels ..... VIII. 716
" " " shell and water-tube boilers ..... VI. 596, 609
" " " sound casting ..... VI. 108
" " " strains on boiler stays ..... VIII. 719
" " " technical education ..... VI. 542
" " " the needs of our navy ..... VIII. 578
" " " tubular boilers ..... VI. 115
" " " veneer cutters ..... VIII. 438
" " " welded *vs.* riveted work ..... VI. 848
STRAW, E. A., theory of shafting ..... VII. 139
Street petroleum engine ..... VII. 701
" turpentine engine ..... VII. 69
Strength of electric welds ..... X. 100
" *and stiffness of large spruce beams*, G. Lanza ..... IV. 119
" *in machine tools*, C. T. Porter ..... I. 119
" *of cements, how to test the*, J. Sondericker ..... IX. 172
" " mill floors ..... II. 479
" " *shafting subjected to both twisting and bending*, Gaetano Lanza ..... VIII. 130
Stretch of belts ..... VII. 556
Strohmeyer on the blue heat of steel ..... IX. 148
STRONG, GEORGE S., disc., cross-head of Corliss engine ..... II. 42
" " " cylinder condensation and the compound engine ..... VIII. 498
" " " economy of the windmill ..... III. 306
" " " machinery at international exhibitions ..... V. 122
" " " natural gas ..... V. 369
" " " new valve motion ..... V. 46
" " " piston packing ..... IX. 93
" " " rail cambering arrangement ..... IV. 118
" " " Strong locomotive ..... IX. 637
" " " water meter ..... V. 71
Strong locomotive, distribution of steam in, F. W. Dean ..... IX. 556; X. 687
Structural steels ..... II. 117
Structure of weld iron ..... VII. 256
Stubbs' steel wire ..... VII. 266
Stuffing-box for vertical engine ..... IV. 373
" boxes for CS_2 engine ..... VII. 731
" " of cylinders ..... X. 699
Sturtevant blower, power for ..... VII. 822
Sub-committees of original test commission ..... III. 111
Subdivision in installing machinery ..... IV. 233
Submarine telegraph work, latest methods in, T. W. Rae ..... II. 349
Substitutes for steam, Geo. H. Babcock ..... VII. 680
Sudden heating of steel, effect of ..... VII. 262
Sugar, the influence of, upon cement, H. deB. Parsons ..... IX. 286
" vapor, corrosion by ..... IX. 429
Sulphide of iron in coal mines ..... VI. 632
Sulphur acids in flue gases ..... VI. 792
" in pig-iron ..... VII. 811

PAGE
Sulphur in engine bedding ..... X. 701
Sulphurous acid gas in mineral wool ..... III. 230
Summary of results of tests of a warm-blast apparatus at Pacific Mills ..... VI. 732 *et seqq.*
Superheated steam, condensation of ..... VIII. 489
" " in underground pipes ..... IV. 408
" vapors ..... X. 670
Superheating in compound engine ..... II. 115
" " calorimeter test ..... VI. 351
" of vapor, effect of ..... VII. 734
" " steam jets ..... X. 391
Superior, the. E. D. Leavitt, Jr ..... II. 106
Surface condenser at high pressure ..... VII. 211
" " " boiler tests ..... VII. 185
Surface condensers, J. M. Whitham ..... IX. 417
SUPLEE, H. H., disc., circulation in steam boilers ..... IX. 493
" " " deep holes in steel ..... VIII. 706
" " " paper friction gear ..... IX. 715
" " " performance of a compound engine ..... IX. 550
" " " punched and sheared edges of steel ..... IX. 730
" " " rope transmissions ..... IX. 707
" " " standards ..... X. 571
" " " central support for Corliss engine ..... X. 829
" " " compound engines for manufacturing purposes X. 78
" " " foundry cupola experience ..... X. 93
" " " joints of boiler shells ..... X. 714
" " " cylinder ratios of triple expansion engines. .. X. 583
Support of long boilers ..... IV. 146
Suspended list ..... VIII. 6
Suspension bridge rope sockets ..... IX. 678
Swain turbine tests ..... VIII. 367
SWASEY, AMBROSE, disc., the steam turbine ..... X. 681
Sweeps for true castings ..... VIII. 253
SWEENEY, JNO. M., river practice of the West ..... IX. 645
SWEET, JOHN E., President's address ..... VI. 31
" " a new principle in steam piston packing ..... IX. 91
" " Coffin's averaging instrument ..... II. 335
" " friction as a factor in motive-power expenses .... I. 143
" " new method of constructing a crank shaft ..... IV. 231
" " new method of casting flange pipe ..... IV. 237
" " the unexpected which often happens ..... VII. 152
" " disc., adoption of code for boiler trials ..... VI. 879
" " " a foundry cupola experience ..... IX. 503
" " " a plea for the printing press in engineering schools ..... IX. 411
" " " an electric speed recorder ..... IX. 379
" " " balanced vertical engine ..... IV. 386
" " " contraction of iron castings ..... VII. 426
" " " crystallization of iron ..... VII. 266
" " " diameters of cone and step pulleys ..... X. 295

PAGE

SWEET, JOHN E., disc., estimating the cost of foundry work..... IX. 396
" " " expansion in single and compound engines.. I. 176
" " " frictional resistance of engines and shafting VI 477
" " " inserting and securing crank pins..... IX. 451
" " " novel hammer-head..... VI. 79
" " " packing for rods and stems..... I. 250
" " " perfect screw..... V. 242
" " " phenomena of steel..... X. 444
" " " piston-packing rings..... VIII. 450
" " " pressures and speeds of journal bearings.... VI. 854
" " " process for steel ingots..... X. 593
" " " reduced section of bolts..... X. 818
" " " screw propulsion..... II. 466
" " " screw threads..... I. 127
" " " sizes of tap drills..... X.
" " " speed of gears..... VI. 863
" " " standard section lining..... IX. 121
" " " steam stamp..... VI. 396
" " " technical education..... VI. 535
" " " the milling machine as a substitute for the planer..... IX. 265
" " " torsion balance..... VI. 639
" " " true crank shafts and bearings..... VII. 528
" " " valve dynamometer..... VII. 646
" " " welded *vs.* riveted work..... VI. 844
Switch for Meigs Elev. R. R..... VII. 94
System of worm-gearing of diametral pitch, Powel-Cheney..... X. 333
System, rational, of piston-packing, S. W. Robinson..... II. 19
Systematic promotion of industries..... IV. 99
" *testing of turbine water-wheels in the United States*, R. H. Thurston..... VIII. 359

Table for belts at varying shaft angles..... IV. 177
" " cushion adjustment in engines..... I. 260
" " economy of windmills..... III. 303
" " packing rings..... II. 22
" " " " single..... II. 32
" " analyses of bituminous coals..... IV. 265
" " " " steel bars..... IV. 416
" " areas of indicator diagrams..... V. 330
" " available energy in water and steam..... VI. 206
" " belt widths..... II. 96
" " coal per H. P..... II. 145
" " constants for CS_2..... VII. 722
" " cost of oil..... VI. 470, 472
" " cylinder capacity and cost..... III. 241
" " data for Siemens gas, water gas, etc..... VII. 674
" " dimensions of ferry-boats..... VII. 198
" " dimensions of storehouse floor..... II. 484
" " distortion of indicator diagrams..... V. 328

PAGE
Sulphur in engine bedding ..... X. 701
Sulphurous acid gas in mineral wool ..... III. 230
Summary of results of tests of a warm-blast apparatus at Pacific Mills ..... VI. 782 *et seqq.*
Superheated steam, condensation of ..... VIII. 489
" " in underground pipes ..... IV. 408
" vapors ..... X. 670
Superheating in compound engine ..... II. 115
" " calorimeter test ..... VI. 351
" of vapor, effect of ..... VII. 734
" " steam jets ..... X. 891
Superior, the, E. D. Leavitt, Jr ..... II. 106
Surface condenser at high pressure ..... VII. 211
" " " boiler tests ..... VII. 185
Surface condensers, J. M. Whitham ..... IX. 417
SUPLEE, H. H., disc., circulation in steam boilers ..... IX. 498
" " " deep holes in steel ..... VIII. 706
" " " paper friction gear ..... IX. 715
" " " performance of a compound engine ..... IX. 550
" " " punched and sheared edges of steel ..... IX. 730
" " " rope transmissions ..... IX. 707
" " " standards ..... X. 571
" " " central support for Corliss engine ..... X. 829
" " " compound engines for manufacturing purposes X. 78
" " " foundry cupola experience ..... X. 93
" " " joints of boiler shells ..... X. 714
" " " cylinder ratios of triple expansion engines. .. X. 583
Support of long boilers ..... IV. 146
Suspended list ..... VIII. 6
Suspension bridge rope sockets ..... IX. 678
Swain turbine tests ..... VIII. 367
SWASEY, AMBROSE, disc., the steam turbine ..... X. 681
Sweeps for true castings ..... VIII. 253
SWEENEY, JNO. M., river practice of the West ..... IX. 645
SWEET, JOHN E., President's address ..... VI. 81
" " a new principle in steam piston packing ..... IX. 91
" " Coffin's averaging instrument ..... II. 335
" " friction as a factor in motive-power expenses .... I. 143
" " new method of constructing a crank shaft ..... IV. 231
" " new method of casting flange pipe ..... IV. 237
" " the unexpected which often happens ..... VII. 152
" " disc., adoption of code for boiler trials ..... VI. 879
" " " a foundry cupola experience ..... IX. 503
" " " a plea for the printing press in engineering schools ..... IX. 411
" " " an electric speed recorder ..... IX. 379
" " " balanced vertical engine ..... IV. 336
" " " contraction of iron castings ..... VII. 426
" " " crystallization of iron ..... VII. 266
" " " diameters of cone and step pulleys ..... X. 295

PAGE

SWEET, JOHN E., disc., estimating the cost of foundry work..... IX. 396
" " " expansion in single and compound engines.. I. 176
" " " frictional resistance of engines and shafting VI. 477
" " " inserting and securing crank pins..... IX. 451
" " " novel hammer-head..... VI. 79
" " " packing for rods and stems..... I. 250
" " " perfect screw..... V. 242
" " " phenomena of steel..... X. 444
" " " piston-packing rings..... VIII. 450
" " " pressures and speeds of journal bearings.... VI. 854
" " " process for steel ingots..... X. 593
" " " reduced section of bolts..... X. 818
" " " screw propulsion..... II. 466
" " " screw threads..... I. 127
" " " sizes of tap drills..... X.
" " " speed of gears..... VI. 863
" " " standard section lining..... IX. 121
" " " steam stamp..... VI. 396
" " " technical education..... VI. 535
" " " the milling machine as a substitute for the planer..... IX. 265
" " " torsion balance..... VI. 639
" " " true crank shafts and bearings..... VII. 528
" " " valve dynamometer..... VII. 646
" " " welded *vs.* riveted work..... VI. 844
Switch for Meigs Elev. R. R..... VII. 94
System of worm-gearing of diametral pitch, Powel-Cheney..... X. 333
System, rational, of piston-packing, S. W. Robinson..... II. 19
Systematic promotion of industries..... IV. 99
" *testing of turbine water-wheels in the United States*, R. H. Thurston..... VIII. 359

Table for belts at varying shaft angles..... IV. 177
" " cushion adjustment in engines..... I. 260
" " economy of windmills..... III. 303
" " packing rings..... II. 23
" " " " single..... II. 32
" " analyses of bituminous coals..... IV. 265
" " " " steel bars..... IV. 416
" " areas of indicator diagrams..... V. 330
" " available energy in water and steam..... VI. 206
" " belt widths..... II. 96
" " coal per H. P..... II. 145
" " constants for CS_2..... VII. 722
" " cost of oil..... VI. 470, 472
" " cylinder capacity and cost..... III. 241
" " data for Siemens gas, water gas, etc..... VII. 674
" " dimensions of ferry-boats..... VII. 198
" " dimensions of storehouse floor..... II. 484
" " distortion of indicator diagrams..... V. 328

PAGE
Sulphur in engine bedding..... X. 701
Sulphurous acid gas in mineral wool..... III. 230
Summary of results of tests of a warm-blast apparatus at Pacific Mills..... VI. 732 *et seqq.*
Superheated steam, condensation of..... VIII. 489
" " in underground pipes..... IV. 408
" vapors..... X. 670
Superheating in compound engine..... II. 115
" " calorimeter test..... VI. 351
" of vapor, effect of..... VII. 734
" " steam jets..... X. 391
Superior, the, E. D. Leavitt, Jr..... II. 106
Surface condenser at high pressure..... VII. 211
" " " boiler tests..... VII. 185
Surface condensers, J. M. Whitham..... IX. 417
SUPLEE, H. H., disc., circulation in steam boilers..... IX. 498
" " " deep holes in steel..... VIII. 706
" " " paper friction gear..... IX. 715
" " " performance of a compound engine..... IX. 550
" " " punched and sheared edges of steel..... IX. 730
" " " rope transmissions..... IX. 707
" " " standards..... X. 571
" " " central support for Corliss engine..... X. 829
" " " compound engines for manufacturing purposes X. 78
" " " foundry cupola experience..... X. 93
" " " joints of boiler shells..... X. 714
" " " cylinder ratios of triple expansion engines.... X. 583
Support of long boilers..... IV. 146
Suspended list..... VIII. 6
Suspension bridge rope sockets..... IX. 678
Swain turbine tests..... VIII. 367
SWASEY, AMBROSE, disc., the steam turbine..... X. 681
Sweeps for true castings..... VIII. 253
SWEENEY, JNO. M., river practice of the West..... IX. 645
SWEET, JOHN E., President's address..... VI. 31
" " a new principle in steam piston packing..... IX. 91
" " Coffin's averaging instrument..... II. 335
" " friction as a factor in motive-power expenses.... I. 143
" " new method of constructing a crank shaft..... IV. 231
" " new method of casting flange pipe..... IV. 237
" " the unexpected which often happens..... VII. 152
" " disc., adoption of code for boiler trials..... VI. 879
" " " a foundry cupola experience..... IX. 503
" " " a plea for the printing press in engineering schools..... IX. 411
" " " an electric speed recorder..... IX. 379
" " " balanced vertical engine..... IV. 386
" " " contraction of iron castings..... VII. 426
" " " crystallization of iron..... VII. 266
" " " diameters of cone and step pulleys..... X. 295

P.
SWEET, JOHN E., disc., estimating the cost of foundry work..... IX.
" " " expansion in single and compound engines.. I. 1
" " " frictional resistance of engines and shafting VI.
" " " inserting and securing crank pins..... IX.
" " " novel hammer-head..... VI.
" " " packing for rods and stems..... I.
" " " perfect screw..... V.
" " " phenomena of steel..... X.
" " " piston-packing rings..... VIII.
" " " pressures and speeds of journal bearings.... VI.
" " " process for steel ingots..... X.
" " " reduced section of bolts..... X.
" " " screw propulsion.....
" " " screw threads..... I.
" " " sizes of tap drills.....
" " " speed of gears..... VI.
" " " standard section lining..... IX.
" " " steam stamp..... VI.
" " " technical education..... VI.
" " " the milling machine as a substitute for the planer..... IX.
" " " torsion balance.....
" " " true crank shafts and bearings..... I.
" " " valve dynamometer.....
" " " welded *vs.* riveted work..... VI.
Switch for Meigs Elev. R. R.....
System of worm-gearing of diametral pitch, Powel-Cheney.....
System, rational, of piston-packing, S. W. Robinson.....
Systematic promotion of industries.....
" *testing of turbine water-wheels in the* Thurston.....

Table for belts at varying shaft angles.....
" " cushion adjustment in engines..... I.
" " economy of windmills.....
" " packing rings.....
" " " " single.....
" " analyses of bituminous coals.....
" " " " steel bars.....
" " areas of indicator diagrams.....
" " available energy in water and steam.....
" " belt widths.....
" " coal per H. P.....
" " constants for CS_2.....
" " cost of oil.....
" " cylinder capacity and cost.....
" " data for Siemens gas, water gas, etc.....
" " dimensions of ferry-boats.....
" " dimensions of storehouse floor.....
" " distortion of indicator diagrams.....

PAGE

Table for efficiency of crank ..... I. 228
" " " " " bearings ..... I. 234
" " " " " SO_2 ice machine ..... II. 220
" " errors of indicator springs ..... V. 316
" " evaporative power of bituminous coal ..... IV. 267
" " expansion of steam and water ..... III. 213
" " experiments with Sturtevant Fan ..... VII. 823
" " factors of evaporation ..... VI. 86–89
" " filtering capacities of Hyatt filter ..... VII. 628
" " forces of indicator springs ..... VII. 513
" " fractures of wire ..... IV. 225
" " friction of belts at different angles ..... II. 235, 236
" " friction of oils ..... I. 88
" " heat units in water ..... VI. 90, 91
" " loads on mill floors ..... II. 469, 471
" " mean specific heat of iron ..... III. 179
" " " " " " platinum ..... III. 178
" " performance of fire boats ..... VIII. 186
" " pipe threads ..... I. 50
" " pressure under drop press ..... V. 54
" " probable minimum weights of steam per H. P. ..... III. 253
" " " " " " coal per H. P. ..... III. 253
" " results for Worthington engines ..... III. 173
" " *sizes of chimneys*, Wm. Kent ..... VI. 81
" " steam consumption ..... II. 286
" " " per H. P. ..... V. 51
" " " used in engines ..... V. 288
" " steaming valves of bituminous coals ..... IV. 260
" " stored energy in steam boilers ..... VI. 212
" " stored energy in steam space of boilers ..... VI. 223
" " tests of materials ..... VI. 482–491
" " total heat in water and steam ..... VI. 91–93
" " terminal pressures ..... II. 143
" " " " and expansion ..... III. 252
" " tension of drum-springs of indicators ..... V. 320
" " tests of a warm-blast apparatus at Pacific Mills:
I. of coal analyses ..... VI. 683
III. of temperatures F. and corresponding B. t. u. ..... VI. 707
IV. of Mean Sp. Ht. of Pt, and losses of temp. by heat carrier ..... VI. 710
V. of Mean Sp. Ht. of Fe, and losses of temp. by heat carrier ..... VI. 713
VI. of Mean Sp. Ht. of Pt-Fe, and losses of temp. by heat carrier ..... VI. 714
VII. of effective heat-value of metals of a calorimeter ..... VI. 719
VIII. of errors in tests of calorimeter ..... VI. 720
IX. of determ. of heat capacity of a calorimeter ..... VI. 723
X. of quantities of heat in B. t. u. of a " ..... VI. 723
XI. of condensed record of weekly experiments ..... VI. 736 *et seqq.*
XII. of " " coal analyses ..... VI. 747

PAGE

XIII. of condensed record of atmospheric air..... VI. 747
XIV. of " " analyses of gases, dampers open .....
XV. of condensed record of analyses of gases, dampers shut..... VI.
XVI. of pyrometric observations.....
XVII. of temperatures deduced from Table XVI.....
XIX. of " at bridge wall, by pyrometer.....
XX. of pyrometric measurements in arch over boilers..
XXI. of comparison of temperatures in cold and warm blast boiler.....
XXII. of comparative temperatures, cold and warm blast boilers.....
XXIII. of calorimetric observations.....
XXIV. of reductions from Table XXIII.....
XXV. of limits of error in calorimetry.....
XXVI. of CO produced by excessively rapid firing.....
XXVII. of capacity of boiler for water.....
XXVIII. of radiation from brick-work .....
XXIX. of " " " .....
XXX. of temperatures in brick-work.....
XXXI. of " " " .....
XXXII. of " " " .....
Table of tests of centrifugal pumps.....
" " " " eye-bars.....
" " " " eye-bars, Springer's patent.....
" " " " Harris-Corliss engine.....
" " " " oils.....
" " " " steels for E. R. Bridge.....
" " " " " " springs, P. R. R.....
" " " " turbines.....
" " transfer of heat..... II.
" " transverse strength of spruce beams.....
" " useful per cent. of large and small machines.....
" " velocity of fly-wheels.....
" " water raised by windmills. .....
" " weights, etc., of indicators.....
" " Whitworth screws..... I.
Tables for facilitating calculations of boiler tests, Wm. Kent.....
" from Nagle's formula.....
" of coefficients of friction of oils.....
" " depreciation .....
" " efficiency of gearing.....
" " experiments with belting..... ....
" " non-conducting coverings for steam pipes, J.

" " power required to move a slide valve.....
" " rotative effort in compound engine, J. C.
" " velocity of the air in blowers..... ....
TABOR, HARRIS, compression as a means of gov ....

PAGE
TABOR, HARRIS, disc., variable load and internal friction..... X. 167
Tachometer for engine tests..... VIII. 93
Tandem compound engine..... I. 183
" " " duplex..... III. 169
Tanks of re-enforced beton.....IV. 395, 398
Taper for bolts and pins ..... VII. 396
" of pipe threads.....IV. 286; V. 371
" of twist drills..... VII. 132
" of wire rope sockets..... IX. 678
Taps for pipe fittings..... IV. 285
Tap drills..... X. 455
TAYLOR, F. W., the relative value of water-gas and gas from the Siemens producer for melting in the O. H. furnace. VII. 669
" " disc., divergencies in flange diameters..... IX. 128
" " " experiments on belting..... VII. 586
" " " sand-blast process..... VIII. 325
" " " shop-order system of accounts..... VII. 475
" " " steel car axles..... IX. 151
" " " training of a dynamic engineer..... VII. 771
" " " true crank shafts and bearings..... VII. 524
" " " water-gas..... VIII. 228
Technical education, discussion on.....VI. 529, *et seq.*
" " in machine design..... VIII. 330
" *training at the Worcester Free Institute*, G. I. Alden..... VI. 510
Telegraphy, multiplex, mechanism employed in, T. W. Rae..... IV. 321
Tellers, see report.
Tellier and Flandrin ammonia engine..... VII. 687
Temper of spiral springs..... IV. 348
" of steel, effect of repeated bending on..... IX. 715
Temperature, affecting standard bars..... V. 247
" critical, of metals..... VI. 4
" " for cutting nails..... VI. 664
" determining efficiency of crank..... I. 232
" effect of, on friction..... VI. 450
" in boiler settings.....VI. 759, 814
" " boiler furnace..... II. 55
" " Bower-Barff process..... IV. 356
" " Siemens furnace..... II. 54
" " ventilating flues..... III. 74
" effect on strength of iron and steel..... X. 717
Tempering of steel in metal baths..... IX. 725
" " springs..... V. 184
Templets from thin metal..... VIII. 295
Tenacity of steels..... II. 416
Tendency of fluid to lift packing ring..... II. 26
Tensile strength of aluminium bronze..... VIII. 256
" test of six eye-bars at Watertown..... IV. 415
" strength of steel..... X. 433
Tension in Rodman guns ..... VIII. 609
" in rope transmissions..... IX. 705

PAGE

Test commission, appointment of U. S., T. Egleston..... III. 80
" " circulars of..... IV. 81
" " report of..... VIII. 16
" " report of committee on.....IV. 29 ; V. 9
" " work of first..... II.
Test of bridge material.....
" Leavitt pumping engine at Lawrence..... V
Testing alignment of engine shafts and pins..... VII.
" centrifugal pumps..... VII
" flume, proportions of..... V
" laboratories.....
" machines at Watertown..... .....II. 62 ;
" machine for castings.....
" " " lubricants..... VI.
" *materials, apparatus used in*, G. C. Henning..... VI.
" " standard methods of..... V
" *of turbine wheels*, R. H. Thurston.....
Tests for car-axles.....
" for cast iron.....
" of boilers, code of rules of.....
" " calorimeter used at Pacific Mills.....
" " centrifugal pumps at Fas Bouches.....
" " Edison-Porter dynamo.....
" " floors in beton house.....
" " Harrison sectional boiler..... VI.
" " oils.....
" " " frictional..... I.
" " " fluidity..... I.
" " rent pipe..... I
" " riveted steel boiler-plate.....
" " springs..... V.
" " spruce beams.....IV.
" " steel, phosphides and sulphides.....
" " " *shortly after rolling*, E. C. Felton..... IX.
" " *the comparative value of different kinds of belting*, S. Webber VIII.
" " turbines..... III.
" " U. S. steamers..... I.
" " welded tubes.....
" " wire rope..... IX.
Thanks, see resolutions.
The unexpected which often happens, J. E. Sweet..... VII. 152
Theorem of Rankine on single-acting expansion engine, W. P. Trowbridge.....
Theory of corrosive action of mineral wool.....
" efficiency of real engines.....
" heat engines.....
" *the finance of lubrication*, R. H. T
" *the sliding friction of rotation*, R. H. T .....
Thermal capacity of metals.....
" unit as standard of evaporation .....

PAGE
Thermo candle of J. S. Williams..... VIII. 668
Thermo-dynamics of Worthington and other compound engines, S. W. Robinson..... III. 130
" second law of..... VII. 726
Thermo-electric generation of current..... IV. 87
Thermometer, air..... VI. 281
" for feed-water..... V. 71
" for steam temperatures..... VII. 188
" in tests at Pacific Mills..... VI. 729
Thermostatic regulators..... IX. 432
Thimble stay bolts..... IX. 543
THOMPSON, C. T., disc., beton as building material..... IV. 402
THOMPSON, E. W., manufacture of cotton-seed oil..... VI. 414
" " disc., belts as grain conveyers..... VI. 411
" " " manufacture of cotton-seed oil..... VI. 433
" " " systems of cataloguing and indexing..... VI. 863
THOMSON, ELIHU, disc., soldering and welding of aluminium..... X. 322
THORNE, W. H., twist drills..... VII. 130
Thorneycroft propellers..... IX. 659
Three-cylinder engines..... I. 178
Throttling of piping for blowers..... IX. 64
Thrust-bearings, friction of..... VII. 305
THURSTON, R. H., address, inaugural, 1880..... I. 7
" " " annual, 1881..... II. 415
" " diagram of efficiency..... III. 267
" " effect of prolonged stress on iron..... IV. 224
" " internal friction in non-condensing engines..... IX. 74
" " introduction to Holley memorial session..... III. 29
" " large and enlarged photographs and blue prints.. IX. 696
" " letter on inclined screw propulsion..... II. 456
" " mechanical engineer, his work and his policy.... IV. 75
" " note on helical seams in boiler-making..... VIII. 357
" " note on the regulation of the steam engine..... II. 338
" " note on water-hammer in steam pipes..... IV. 404
" " on adoption of a code for steam boiler trials..... VI. 878
" " on the friction of non-condensing engines..... VIII. 86
" " pressure obtainable by the use of the drop-press. V. 53
" " proportioning steam cylinders..... IX. 360
" " ratio of expansion at maximum efficiency..... II. 128
" " sliding friction of rotation..... VI. 122
" " steam boilers as magazines of explosive energy.. VI. 199
" " systematic testing of turbine water-wheels in the United States..... VIII. 359
" " the several efficiencies of the steam engine..... III. 245
" " theory of the finance of lubrication..... VI. 437
" " on the distribution of internal friction in engines. X. 110
" " variable load, internal friction and engine speed and work..... 138
" " disc., adjustable cut-off for marine engines..... IV. 140
" " " alloys of copper-tin-zinc..... VIII. 336

PAGE

THURSTON, R. H., disc., averaging machines.....
" " " built-up work in engine construction..... III.
" " " calorimeter as pyrometer..... II.
" " " centrifugal pumps..... IX.
" " " chronograph for engineering purposes..... III
" " " counterbalancing of engines.....
" " " crystallization of iron.....
" " " Edison-Porter steam dynamo.....
" " " efficiency of the crank.....
" " " efficiency of a man at a crank.....
" " " expansion of steam and water .....
" " " experimental mechanics.....
" " " experiments with blowers.....
" " " friction as a factor.....
" " " friction of lubricating oils.....
" " " Holley's basic Bessemer plant.....
" " " improvement in ferry-boats.....
" " " measurements of friction.....
" " " mill floors.....
" " " mineral wool.....
" " " most economical point of cut-off.....
" " " new method of blue printing.....
" " " new valve motion.....
" " " nomenclature of machine details.....
" " " non-conducting coverings.....
" " " rating of boilers by horse-powers.....
" " " standard measurements.....
" " " steam calorimeter.....
" " " Strong locomotive.....
" " " technical education.....
" " " test commission.....
" " " training of a dynamic engineer..... V
" " " Trenton Rod Mill.....
" " " number of meetings..... A.
" " " compound engines for manufacturing purposes.....
" " " friction of piston packing rings.....
TILDEN, J. A., disc., smoke in blacksmith shops..... V
Tilting water meter for purposes of experiment, J. C. Hoadley.....
Timber, expansion of, due to water, De Volson Wood.....
Time and cost, a short way to keep, H. L. Binsse.....
" diagram of course at Worcester Institute.....
" of exposure in Bower-Barff process.....
" " oscillation of spring.....
Tires, shrinkage allowance for.....
Tonnage of grain in California.....
Topical discussions and interchange of data, XIth meeting.....
" " XIIth meeting.....
" " XIIIth " .....
" " XIVth " .....

PAGE
Topical discussion, XVth meeting ..... VIII. 697
" " XVIth " ..... IX. 324
" " XVIIth " ..... IX. 708
" " XVIIIth meeting..... ..... X. 431
" " XIXth meeting..... ..... X. 810
Toronto Worthington pumping engine ..... I. 179
Torpedo boats..... IV. 92
" defense, requirements of..... VIII. 585
Torpedoes, welded..... VI. 848
Torsion, apparatus for measuring..... VIII. 138
" *balance, the*, Wm. Kent..... VI. 636
" in spiral springs..... IV. 337
" of steel..... ..... X. 482
Toughened castings..... IX. 241
Tower, Beauchamp, experiments on lubrication..... VI. 157
TOWNE, H. R., a safety car heating system..... IX. 458
" " cranes, a study of types and details ..... IV. 288
" " drawing office system ..... V. 193
" " engineer as an economist .... VII. 428
" " steam and power; the commercial determination of costs..... VIII. 617
" " gain-sharing..... ..... X. 600
" " disc., adoption of code for boiler trials ..... VI. 888
" " " annealing furnaces for castings ..... VIII. 297
" " " a problem in profit-sharing ..... VIII. 643
" " " boilers for warming dwelling-houses..... VI. 628
" " " calculating machines..... VIII. 707
" " " capital's need for high-priced labor..... VIII. 289
" " " data for steam heating ..... VI. 857
" " " deep holes in steel..... VIII. 704
" " " descending smoke-flues..... VII. 390
" " " different kinds of belting.....VIII. 552, 560
" " " divergencies in flange diameters.... ..... IX. 129
" " " dredging machinery..... VIII. 127
" " " drilling holes in glass..... VII. 394
" " " drop-press..... V. 58
" " " experiments on belting..... VII. 585
" " " " " gearing..... VIII. 300
" " " fit of set screws..... ..... IX. 333
" " " flow of metals..... VI. 667
" " " flying rope..... VIII. 318
" " " friction of engines..... IX. 88
" " " friction of non-condensing engines ..... VIII. 107
" " " grinding-room grit..... VIII. 301
" " " handling grain in California ..... VII. 668
" " " intrinsic value of special tools .... VIII. 262
" " " laboratory of mechanical engineering equipment. VIII. 329
" " " load on tires..... VII. 785
" " " locks and their failings..... VI. 254
" " " natural gas..... V. 371

PAGE
TOWNE, H. R., disc, oxidation of metals ..... VI. 634
" " " packing for pneumatic machinery ..... VII. 381
" " " perfect screw ..... V. 236
" " " power crane ..... V. 138
" " " power for machine tools ..... VIII. 314
" " " power to drive a blower ..... VII. 824
" " " pressures and speeds of journals ..... VI. 849
" " " properties of metals and alloys ..... V. 147
" " " recent improvements in drawing boards ..... VI. 232
" " " sand-blast process ..... VIII. 325
" " " shell and water-tube boilers ..... VI. 582
" " " sliding friction of rotation ..... VI. 158
" " " smoke in blacksmith shops ..... VIII. 698
" " " soft castings ..... IX. 337
" " " standard section lining ..... IX. 116
" " " strength of shafting ..... VIII. 141
" " " substitutes for steel in springs ..... VII. 386
" " " systems of cataloguing and indexing ..... VI. 865
" " " testing small engines ..... VII. 380
" " " the milling machine as a substitute for the planer ..... IX. 265
" " " the unexpected which often happens ..... VII. 156
" " " transmission by belting ..... VII. 357
" " " valve dynamometer ..... VII. 646
" " " water purification ..... VII. 628
" " " water-gas ..... VIII. 233
" " " working stress of iron ..... VIII. 179
" " " wrought-iron scrap in castings ..... IX. 340
" " " standards ..... X. 572
" " " expansion of timber, due to water ..... X. 542
" " " electromotors for shops ..... X. 829
" " " central support for Corliss engines ..... X. 831
" " " joints of boiler shells ..... X. 715
" " " lubrication ..... X. 815
" " " tractive forces of leather belts ..... X. 773
Tractive force in Meigs Elev. R. R. ..... VII. 111
" forces of leather belts on pulley faces, S. A. Smith ..... X. 765
Trade schools. ..... IV. 101 ; X. 492
Transfer of heat from iron surfaces ..... VIII. 528
Transmission of heat through boiler setting ..... VI. 814
" " power by belting (M. I. T. Exps.) Gaetano Lanza ... VII. 347
" " " " " (Sellers' Exps.) Wilfred Lewis .... VII. 549
" " " " gearing " " .... VII. 273
Transmitting dynamometer, friction in ..... X. 514
Transportation, progress in ..... IV. 84
Transverse strength and stiffness of large spruce beams, G. Lanza ..... IV. 119
TRAUTWEIN, A. P., disc., water-gas ..... VIII. 230
Traverse gear for cranes ..... IV. 294
Traveling cranes of Appleby design ..... IV. 305
Travel of slide valves ..... I. 153

PAGE

Treasurer's report, see Report.
Trenton Iron Co.'s Continuous Rod Mill, W. Hewitt ..... II. 70
TRESCA, HENRI, memorial notice of ..... VI. 873
Trevithick's steam and flue-gas engine ..... VII. 691
Trial of upright boilers and engines at Roxbury Pump. Station, J. S. Coon ..... III. 290
Trials of a warm-blast apparatus at the Pacific Mills, J. C. Hoadley .. VI. 676
Tribute to A. L. Holley, J. C. Bayles ..... III. 34
Triple alloys, copper-tin-zinc ..... VIII. 336
Triple-expansion engines, economy of ..... VIII. 496
Triple thermic motor. *See* bisulphide of carbon ..... VII.
Triple-expansion engines, cylinders of ..... X. 576
Trolleys or trucks for cranes ..... IV. 299
TROWBRIDGE, W. P., heating surface in ventilating flues ..... III. 67
" " on a theorem of Rankine as to economy of single acting engine ..... III. 236
" " on the relative economy of ventilation by heated chimneys and by fans ..... VII. 531
" " the rating of boilers by horse-powers for commercial purposes ..... VII. 214
" " disc., mill floors ..... II. 498
" " " report of a committee on steam boiler trials ..... VI. 314
" " " substitutes for steam ..... VII. 718
Troy, original Bessemer plant at, R. W. Hunt ..... VI. 61
True and mean specific heat ..... III. 175
TRUMP, C. N., disc., sand-blast process ..... VIII. 324
" " number of meetings ..... X. 23
Tube for oil wells ..... VIII. 348
Tubes diverging, best form of, A. F. Nagle ..... IX. 505
" *from solid bars*, Geo. H. Babcock ..... VIII. 564
" protected from corrosion ..... IV. 363, 364
" welded, tests of ..... VI. 845
Tubular boilers, a new method of constructing, F. A. Scheffler ..... VI. 110
" springs ..... V. 191
Turbine, note of the steam, J. B. Webb ..... X. 680
Turbine wheel testing, R. H. Thurston ..... VIII. 359
Turbines, different forms of ..... IV. 82
" *efficiency of, as affected by form of gate*, S. Webber ..... III. 78
Turpentine for drilling glass ..... VII. 393
Tuyerage of cupolas ..... IX. 499
Tuyeres at Wyandotte ..... VI. 45
Twist drills, W. H. Thorne ..... VII. 130

UNDERWOOD, F. H., disc., different kinds of belting ..... VIII. 554, 562
" " " experiments on belting ..... VII. 586
" " " smoke-preventing furnaces ..... VII. 793
Unequal cooling of steel ..... VII. 252
Uniformity in cupola mixtures ..... VII. 424
Uniform methods of test, report on ..... VIII. 17, 346

PAGE
Uniform speed of counter-shafts..... VII. 146
Unit of boiler power..... VI. 265
" " (C. B. Richards)..... VI. 320
" " (W. P. Trowbridge)..... VI. 319
" commercial evaporation..... V. 300
" evaporation..... V. 284
Universal joints in marine engine shafts..... VII. 526
Unkunde Unheilschwanger, *Herr*..... VI. 42
UNWIN, W. C., disc., an error in Encyclopædia Britannica..... X. 784
Upright boilers at Roxbury Pumping Station, tests of, J. S. Coon... III. 290
Use of calorimeter as pyrometer for high temperatures, J. C. Hoadley. II. 42
" *kerosene oil in steam boilers*, L. F. Lyne..... IX. 247

Vacuum pan, efficiency of..... VIII. 425
Valuation of lubricants by consumers..... VI. 437
Valve, adjustable, O'Neill's..... II. 349
" a self-packing, H. F. J. Porter..... II. 499
" *dynamometer, a new*, C. M. Giddings..... VII. 631
" gear for steam stamp, independent..... VI. 396
" gear of Western steamboats..... IX. 647
" gear, Strong locomotive..... IX. 557
" motion for steam stamp.....VI. 372, 382
" *motion, new form of*, C. Angstrom..... V. 41
" the Giddings slide..... VII. 640
" rods of steel..... X. 454
" stems..... X. 700
Valves, back pressure on, S. W. Robinson..... IV. 150
" *balanced*, C. C. Collins..... IV. 268
" " Allen..... IV. 270
" " fitted hot..... IV. 273
" " Porter-Allen..... IV. 269
" " Sweet..... IV. 271
" *Cornish or double beat*, A. F. Nagle..... X. 521
" " for high service pump at Providence..... X. 525
" for fire protection of mills..... II. 321
" of engine at Wyandotte..... VI. 56
" ..... X. 527
Vampire, the locomotive..... VII. 704
Van Buren's calorimeter..... VII. 87
VAN VLECK, FRANK, standard section lining..... IX. 107
Vapor as absorbent of heat..... VIII. 501
" *saturated and superheated*, De Volson Wood..... X. 670
" *and vapor engines*, De Volson Wood..... X. 648
Variable load in compound engine..... I. 171
Variation of pressure in receiver of compound engine..... III. 131
" pitch of screw-threads..... X. 465
Variable load, internal friction and engine speed and work, R. H. Thurston..... X. 138
Velocity and pressure of wind..... III. 305
" of air in blowers..... IX. 53

PAGE
Velocity of steam stamp ..... VI. 391
Veneer cutters, direct acting, T. S. Crane..... VIII. 426
Ventilating an office-building, H. T. Snell..... IX. 99
" *flues, heating surface in*, W. P. Trowbridge..... .... III. 67
Ventilation by coil and blower compared..... III. 75
" *by heated chimneys and by fans*, W. P. Trowbridge..... VII. 531
" of hospitals and public buildings ..... VII. 540
Vertical engines, balanced, W. F. Durfee..... IV. 368
Vibration of buildings..... ..... II. 270
" " engine foundations..... IV. 385
" " flying rope..... VIII. 315
" " mill floors ..... II. 471
" " mills affecting product..... ..... II. 498
Vignôlles' driving wheels ..... VII. 124
Viscosimeters ..... IX. 370
Viscosity of lubricants, significance of, J. E. Denton ..... IX. 369
VOGT, A.. disc., arranging and indexing drawings and patterns .....II. 374, 378
" " " counterbalancing of engines ..... II. 273
Von Welsbach's zirconium light..... VIII. 665
Vortex chamber..... IX. 239
Vulcanized fiber for brake straps..... IX. 331

Wagon boiler ..... VI. 588
WALKER, F. A., address of welcome..... VII. 832
" JOHN, disc., another new steam engine indicator..... VII. 518
" " " annular jet for ejector..... VII. 804
" " " chains for cranes..... VIII. 712
" " " cranes..... IV. 306
" " " data for steam-heating..... VI. 860
" " " drawing-office system..... V. 204
" " " efficiency of a man at a crank ..... VIII. 714
" " " experiments on belting..... VII. 586
" " " flow of metals..... VI. 668
" " " frictional resistances of engine and shafting.. VI. 473
" " " friction in hoisting machinery..... VIII. 716
" " " heating and ventilating a building..... IX. 104
" " " mechanism for clutch couplings ..... IV. 314
" " " moulds for printing-press ink-rolls..... VII. 809
" " " pressures and speeds of journals..... VI. 851
" " " smoke-preventing furnaces..... VII. 794
" " " speed of gears..... VI. 862
" " " standard fittings..... IV. 285
" " " strains in boiler stays..... VIII. 720
" " " substitutes for steam..... VII. 729
" " " true crank-shafts and bearings..... VII. 526
" " " veneer cutters..... VIII. 438
" " " welded *vs.* riveted work..... VI. 845
Walker's method of pouring cast-iron cylinders..... VII. 810
WALWORTH, A. C., disc., intrinsic value of special tools..... VIII. 268
WARD, W. E., beton with iron as a building material..... IV. 388

PAGE
WARD, W. E., early experiments involving the flow of metals..... VI. 655
Warehouse for grain in California..... VII. 661
Warm-blast apparatus for cupolas..... IX. 503
" " *trials of*, J. C. Hoadley..... VI. 676
Warming a beton house.....IV. 392, 396
" air, metal surfaces for..... VII. 361
WARNER, W. R., disc., automatic regulator for heating apparatus... IX. 439
" " " shaft governors..... IX. 321
" " " roller bushing for journals..... IX. 329
" " " rope transmissions..... IX. 711
Warsop steam and flue-gas engine..... VII. 692
Wastefulness in piece-work..... VIII. 646
Water as lubricant..... X. 395
" condensed in heating coils..... VII. 368
" evaporated by gas fuel..... V. 361
" *gas as fuel*, Wm. Kent..... VIII. 225
" *gas for melting in O. H. furnace*, F. W. Taylor..... VII. 669
" grates in boilers of Pacific Mills..... VI. 694
" *hammer in steam-pipes, note on*, R. H. Thurston..... IV. 404
" horse-power used in United States in 1880..... VIII. 360
" *meter, a tilting*, J. C. Hoadley..... V. 63
" " errors of.....V. 69 ; VIII. 626
" per H. P., in compound engine..... I. 173
" " per hour..... X. 252
" power plant, cost of..... X. 501
" platinum pyrometer..... VI. 702
" purification for domestic and manufacturing purposes..... VII. 617
" stations for R. R..... III. 307
Water-tube and shell boilers, A. Stirling..... VI. 566
" boilers, advantages of.....VI. 604, 613
" " at sea..... VI. 116
" " inventors of..... VI. 601
" " priming of..... VI. 578
Water used by strong engine..... IX. 608
" wheel of ferry-boats..... IV. 141
" " shafts, engines on..... II. 77
WATSON, E. G., disc., age of steam boilers..... II. 522
Watt's boiler..... VI. 588
Wax in steam boilers..... VI. 609
Wear of gears..... IX. 222
Wearing of crosshead gibs..... IX. 374
" surfaces of screws and nuts..... V. 242
WEBB, J. B., a persistent form of gear tooth..... IX. 398
" " belting to connect shafts which are not parallel and do not intersect.....IV. 165; III. 22
" " new form of steam engine indicator..... IV. 182
" " Reuleaux's kinematic models (abstract)..... IV. 367
" " an error in the Encyclopædia Britannica..... X. 778
" " note on the steam turbine..... X. 680
" " overhauling of a mechanical power..... X. 402

PAGE
Velocity of steam stamp ..... VI. 391
Veneer cutters, direct acting, T. S. Crane ..... VIII. 426
Ventilating an office-building, H. T. Snell ..... IX. 99
" *flues, heating surface in*, W. P. Trowbridge ..... III. 67
Ventilation by coil and blower compared ..... III. 75
" *by heated chimneys and by fans*, W. P. Trowbridge ..... VII. 531
" of hospitals and public buildings ..... VII. 540
Vertical engines, balanced, W. F. Durfee ..... IV. 368
Vibration of buildings ..... II. 270
" " engine foundations ..... IV. 385
" " flying rope ..... VIII. 315
" " mill floors ..... II. 471
" " mills affecting product ..... II. 498
Vignôlles' driving wheels ..... VII. 124
Viscosimeters ..... IX. 370
Viscosity of lubricants, significance of, J. E. Denton ..... IX. 369
VOGT, A., disc., arranging and indexing drawings and patterns ..... II. 374, 378
" " " counterbalancing of engines ..... II. 273
Von Welsbach's zirconium light ..... VIII. 665
Vortex chamber ..... IX. 239
Vulcanized fiber for brake straps ..... IX. 331

Wagon boiler ..... VI. 588
WALKER, F. A., address of welcome ..... VII. 832
" JOHN, disc., another new steam engine indicator ..... VII. 518
" " " annular jet for ejector ..... VII. 804
" " " chains for cranes ..... VIII. 712
" " " cranes ..... IV. 306
" " " data for steam-heating ..... VI. 860
" " " drawing-office system ..... V. 204
" " " efficiency of a man at a crank ..... VIII. 714
" " " experiments on belting ..... VII. 586
" " " flow of metals ..... VI. 668
" " " frictional resistances of engine and shafting ..... VI. 473
" " " friction in hoisting machinery ..... VIII. 716
" " " heating and ventilating a building ..... IX. 104
" " " mechanism for clutch couplings ..... IV. 314
" " " moulds for printing-press ink-rolls ..... VII. 809
" " " pressures and speeds of journals ..... VI. 851
" " " smoke-preventing furnaces ..... VII. 794
" " " speed of gears ..... VI. 863
" " " standard fittings ..... IV. 285
" " " strains in boiler stays ..... VIII. 720
" " " substitutes for steam ..... VII. 729
" " " true crank-shafts and bearings ..... VII. 526
" " " veneer cutters ..... VIII. 438
" " " welded *vs.* riveted work ..... VI. 845
Walker's method of pouring cast-iron cylinders ..... VII. 810
WALWORTH, A. C., disc., intrinsic value of special tools ..... VIII. 268
WARD, W. E., beton with iron as a building material ..... IV. 388

PAGE
WARD, W. E., early experiments involving the flow of metals..... VI. 655
Warehouse for grain in California..... VII. 661
Warm-blast apparatus for cupolas..... IX. 503
" " *trials of*, J. C. Hoadley..... VI. 676
Warming a beton house.....IV. 392, 396
" air, metal surfaces for..... VII. 361
WARNER, W. R., disc., automatic regulator for heating apparatus... IX. 439
" " " shaft governors..... IX. 321
" " " roller bushing for journals..... IX. 329
" " " rope transmissions..... IX. 711
Warsop steam and flue-gas engine..... VII. 692
Wastefulness in piece-work..... VIII. 646
Water as lubricant..... X. 395
" condensed in heating coils..... VII. 368
" evaporated by gas fuel..... V. 361
" *gas as fuel*, Wm. Kent..... VIII. 225
" *gas for melting in O. H. furnace*, F. W. Taylor..... VII. 669
" grates in boilers of Pacific Mills..... VI. 694
" *hammer in steam-pipes, note on*, R. H. Thurston..... IV. 404
" horse-power used in United States in 1880..... VIII. 360
" *meter, a tilting*, J. C. Hoadley..... V. 63
" " errors of.....V. 69 ; VIII. 626
" per H. P., in compound engine..... I. 173
" " per hour..... X. 252
" power plant, cost of..... X. 501
" platinum pyrometer..... VI. 702
" purification for domestic and manufacturing purposes..... VII. 617
" stations for R. R..... III. 307
Water-tube and shell boilers, A. Stirling..... VI. 566
" boilers, advantages of.....VI. 604, 613
" " at sea..... VI. 116
" " inventors of..... VI. 601
" " priming of..... VI. 578
Water used by strong engine..... IX. 608
" wheel of ferry-boats..... IV. 141
" " shafts, engines on..... II. 77
WATSON, E. G., disc., age of steam boilers..... II. 522
Watt's boiler..... VI. 588
Wax in steam boilers..... VI. 609
Wear of gears..... IX. 222
Wearing of crosshead gibs..... IX. 374
" surfaces of screws and nuts..... V. 242
WEBB, J. B., a persistent form of gear tooth..... IX. 398
" " belting to connect shafts which are not parallel and do not intersect.....IV. 165 ; III. 22
" " new form of steam engine indicator..... IV. 182
" " Reuleaux's kinematic models (abstract)..... IV. 367
" " an error in the Encyclopædia Britannica..... X. 778
" " note on the steam turbine..... X. 680
" " overhauling of a mechanical power..... X. 402

PAGE

WHEELOCK, JEROME, disc., compound engines for manufacturing purposes ..... X. 77
" " " phenomena of steel ..... X. 453
WHITEHEAD, G. E., disc., fit of set screws ..... IX. 335
" " " sizes of tap drills ..... X. 455
" " " variation of pitch in screw threads ..... X. 465
" " " reducing section of bolts ..... X. 821
" " " phenomena of steel ..... X. 455
WHITHAM, JAY M., surface condensers ..... IX. 417
" " cylinder ratios of triple-expansion engines ..... X. 576
" " disc., circulation in steam boilers ..... IX. 491
" " " proportioning steam cylinders ..... IX. 366
Whitworth, Sir Joseph, systems of ..... VIII. 685
" " compressed steel ..... IV. 79; VIII. 615
" " hollow shafts for marine engines ..... VII. 249, 523
" " screws ..... I. 48
" " threads for screws ..... I. 127; V. 220
Wicken, W. B., regenerating lamp ..... VIII. 671
WILCOX, J. F., disc., a foundry cupola experience ..... IX. 502
" " " large blue prints ..... IX. 701
" " " river practice of the West ..... IX. 655
" " " strains in locomotive boilers ..... IX. 544
" " " tubes from solid bars ..... VIII. 569
" " " viscosity determinations of lubricants ..... IX. 375
Wilcox air engine ..... VII. 707
" petroleum engine ..... VII. 701
" products-of-combustion engine ..... VII. 708
" trap for steam pipes ..... VII. 821
Williams, J. S., incandescent light ..... VIII. 668
" rocking grates at Pacific Mills ..... VI. 694
WILLSON, F. N., disc., standard section lining ..... IX. 117
Winckler apparatus for analysis of flue-gases ..... VI. 730
Winding and pumping machinery of anthracite regions of Pennsylvania, H. Green ..... IV. 217
Windmill as a prime mover, note on economy of, A. R. Wolff ..... III. 299
Windmills for railroad pumping ..... III. 307
" " storage of electricity ..... III. 302, 307
Wire-drawing by the governor ..... II. 344
" " in the receiver engine ..... I. 174
" *rope fastenings*, Wm. Hewitt ..... IX. 671
Wobble-drill ..... X. 461
Wöhler's experiments ..... VIII. 159
WOLFF, A. R., most economical point of cut-off in the steam engine. II. 147, 281
" " note on the economy of the windmill as a prime mover III. 299
" " value of the study of the mechanical theory of heat. I. 211
" " disc., expansion of steam and water ..... III. 214
" " " friction of non-condensing engines ..... VIII. 106
" " " most economical point of cut-off ..... II. 185
" " " screw propulsion ..... II. 457, 465
" " " standard pipe report ..... VIII. 43
" " " water-meter ..... V. 72

PAGE
WOLFF, A. R., disc., steam consumption of engines ..... X. 758
Wollaston anemometer ..... VI. 725
WOOD, DE VOLSON, expansion of timber due to the absorption of water ..... X. 539
" " some properties of ammonia ..... X. 627
" " formulas for saturated and super-heated vapors X. 670
" " some properties of vapor and vapor engines ... X. 648
" " disc., centrifugal pumps ..... IX. 240
" " " conicograph ..... VIII. 155
" " " economy of high and low speed engines.. IX. 714
" " " working stress of iron ..... VIII. 169
" " " steam consumption of engines ..... X. 759
" " " refrigerating machine ..... X. 808
" " " cylinder ratios of triple-expansion engines X. 584
" " " president's address ..... X. 494
" " " compound engines for manufacturing purposes ..... X. 81
" " " reducing section of bolts ..... X. 820
" " " engines ..... X. 648
" " " number of meetings ..... X. 26
" " " gain-sharing ..... X. 619
Wood columns not loaded through axis ..... III. 108
" for brake straps and friction gearing ..... IX. 331
" for kindling in a boiler test ..... VI. 681
WOODBURY, C. J. H., fire protection of mills ..... II. 301
" " introduction to non-conducting coverings (Ordway) ..... V. 73
" " measurements of the friction of lubricating oils I. 73; VI. 136
" " mill floors ..... II. 468
" " electric welding ..... X. 95
" " disc., arranging and indexing drawings and patterns ..... II. 374
" " " beton as building material ..... IV. 400
" " " chronograph for engineering purposes .. III. 191
" " " counterbalancing of engines ..... II. 271
" " " data for steam heating ..... VI. 861
" " " economy in lubrication ..... IV. 318
" " " expansion in single and compound engine I. 174
" " " experiments with non-conductors ..... II. 37
" " " friction as a factor ..... I. 152
" " " heating and ventilating a building ..... IX. 102
" " " measurements of friction ..... VI. 164
" " " mineral wool ..... III. 231
" " " most economical point of cut-off ..... II. 286
" " " non-conducting coverings ..... V. 110
" " " oxidation of metals ..... VI. 634
" " " perfect screw ..... V. 248
" " " pumps for driven wells ..... IX. 326
" " " rules for boiler tests ..... V. 274
" " " spiral springs ..... IV. 348

PAGE

WOODBURY, C. J. H., disc., systems of cataloguing and indexing .... VI. 865
" " " test commission..... III. 104
" " " torsion balance..... VI. 639
" " " electromotors for shops..... X. 824
" " " soldering and welding of aluminium..... X. 821
" " " reducing section of bolts..... X. 821
" " " variable load, speed, and engine friction.. X. 171
" " " loss by friction in a transmitting dynamometer ..... X. 519
Woodbury, Merrill & Patton air engines..... VII. 731
WOODWARD, C. M., the training of a dynamic engineer at Washington University, St. Louis..... VII. 742
" " disc., river practice of the West..... IX. 661
WOOLSON, O. C., a railroad bed for bridge structures..... IX. 276
" " disc., a problem in profit-sharing and the labor question..... VIII. 651
" " " chains for cranes..... VIII. 718
" " " efficiency of a man at a crank..... VIII. 715
" " " fit of set screws..... IV. 335
" " " piston packing..... IX. 93–95
" " " roller bushing for journals..... IX. 330
" " " soft castings..... IX. 338
" " " strains in boiler stays..... VIII. 721
" " " sizes of tap drills..... X. 461
Wootten fire-box for culm-burning..... VII. 391
Worcester Free Institute, technical training at, G. I. Alden..... VI. 510
Work of friction..... VI. 124
Working stress of iron and steel..... VIII. 157
Worm-gearing, details for..... VI. 853
" experiments on..... VII. 284
" *of diametral pitch*..... X. 333
WORTHINGTON, HENRY ROSSITER, in memoriam..... II. 228
" " " disc., expansion in single and compound engine..... I. 180
" " " " friction of oils..... I. 113
" " " " metric system..... I. 52
" " " " study of the mechanical theory of heat..... I. 219
Wright gas engine..... VII. 698
Wrought iron, crystallization of, Wm. Hill..... VII. 241
" " mixed with cast..... VI. 104
" " pipe, sizes of..... VIII. 40
" " scrap in castings..... IX. 339
Wyandotte Steel Works, account of the, W. F. Durfee..... VI. 40

Yacht engines, trials of..... II. 428
YATES, W. & J., welded flues..... VI. 846
YOST, T. M., disc., phenomena of steel..... X. 453

Zeller and Hunt's experiments with aero-steam engine..... VII. 787
Zero motor..... VII. 690
Zirconia for incandescent lighting..... VIII. 666

ERRATA.

[Attention has been called to the following corrections to be made in the text of the previous volumes.]

VOLUME IV.

Page 155, 24th line, for "*orifice*" read "*origin.*"
" 157, 1st " " p_3 " p_2
" 158, 6th " " AO " aO
" 158, 33d " " p^1 " p_1
" 159, 15th " " " " "
" 161, 17th " " p " "
" 163, 29th " " p^1 " p_1
" 416, 4th " " *bars before annealing*, read *steel for Blair Bridge.*
" 416, Table, 1st column. Insert "*before annealing*" for the first two lines. "*After annealing*" applies to the last twelve lines only.
" 417, 4th line, for "*East River*" read "*Blair.*"

VOLUME VI.

Page 275, foot note, 9th line, should read: Items 40 to 42. First term = item 30 × 0.8698.
Page 413, nineteenth line, for page 488 read 403.
" " twentieth " " 50-inch read 36.

VOLUME VII.

Page 225, sixteenth line, for 3,300 read 33,000.
" 542, sixth line from bottom, for $\frac{C_1}{T_1}$ read $\frac{C_1}{T_c}$.

VOLUME VIII.

Page 231, twenty-seventh line, for carbonic oxide
acid.
Page 306, fifth line, for through read
comma before and not after it.
Page 526, fourth line, should read: L =
in diameters.

Page 703, fourth line from bottom, for 155 square inches read 1.55 square inches.

VOLUME IX.

Page 133, fourteenth line from bottom, for neatly read nearly.

Page 223, sixth line from bottom, for from 1500 to 1700, read from 15 to 17 revolutions.

Page 311, tenth line, and on pp. 319, 320, and 321, for Silber read Silver.

Page 395, in table:

In first column, for netted read melted.

" ninth " " fencing " facing.

VOLUME X.

Page 104, fifth line, for inversely read directly.

Page 107, at signature of letter, for A. M. Dolbear read A. E. Dolbear.

Page 526, Fig. 120 is slightly inaccurate in that it does not show $\frac{3}{8}$ of an inch of actual contact of valve and seat.

Page 705, twenty-second line, for one-sixteenth read seven-eighths.

Page 703, fourth line from bottom, for 155 square inches read 1.55 square inches.

VOLUME IX.

Page 133, fourteenth line from bottom, for neatly read nearly.

Page 223, sixth line from bottom, for from 1500 to 1700, read from 15 to 17 revolutions.

Page 311, tenth line, and on pp. 319, 320, and 321, for Silber read Silver.

Page 395, in table:

In first column, for netted read melted.

" ninth " " fencing " facing.

VOLUME X.

Page 104, fifth line, for inversely read directly.

Page 107, at signature of letter, for A. M. Dolbear read A. E. Dolbear.

Page 526, Fig. 120 is slightly inaccurate in that it does not show $\frac{3}{8}$ of an inch of actual contact of valve and seat.

Page 705, twenty-second line, for one-sixteenth read seven-eighths.

THE UNIVERSITY OF MICHIGAN · LIBRARIES · 1817

THE UNIVERSITY OF MICHIGAN LIBRARIES